YA02

USER MANUAL

US

RoHS

Extended Warranty to 36 Months

Send the order number to our service E mail to extend the

warranty to 36 months unconditionally

We will register your extended warranty service within 24 hours

Email: getyourightnow@outlook.com

Words from MAILANGSHI:

If you have any problems with any product, please contact us in time.

We have a 12-month return and replacement warranty period.

MAILANGSHI's customer service will reply to you in time.

Contact email: getyourightnow@outlook.com

We have been committed to providing the best service to our customers.

We hope that our products can be recognized by you.

Your positive evaluation shows us the rewards of our hard work.

If you have any questions, please contact our customer service in time to make us more advanced. All members of MAILANGSHI use their most sincere heart to give customers the best experience.

Wish you the best

Best regards,

MAILANGSHI Team

PACKAGE INCLUDING

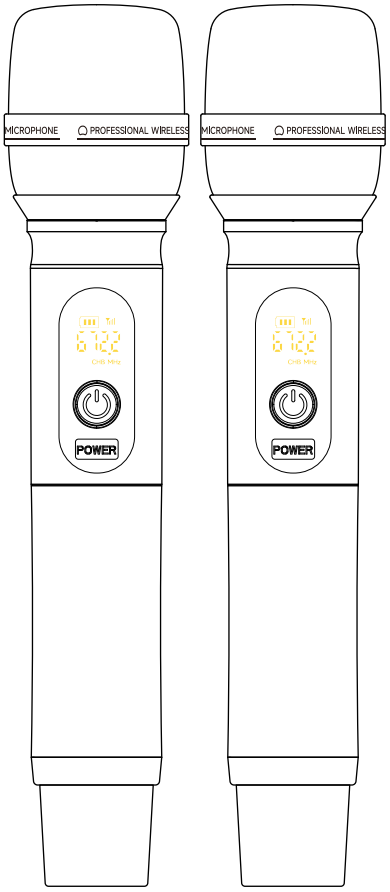

Microphone*2

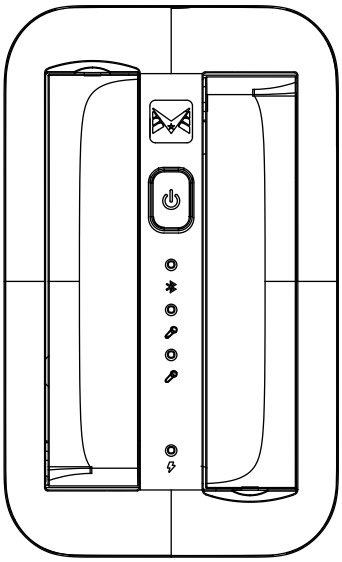

Receiver*1

Adapter*1

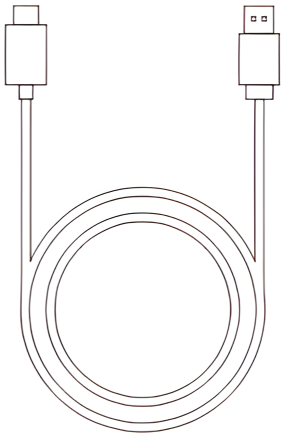

Charging cable*1

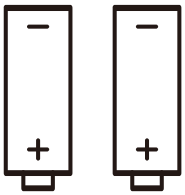

Battery*2

OPERATING ENVIRONMENTS & NOTES

When using this device, keep it away from water.

Use the device in ventilated environment, keep it away from fire.

Since it's a wireless device, please keep it away from other interfering sources.

Don't take apart the device.

Please use the standard power supply, high voltage may damage the device.

Please place the used batteries into the recycle bin, don't litter them.

MICROPHONE & RECEIVE RCOMPONENT

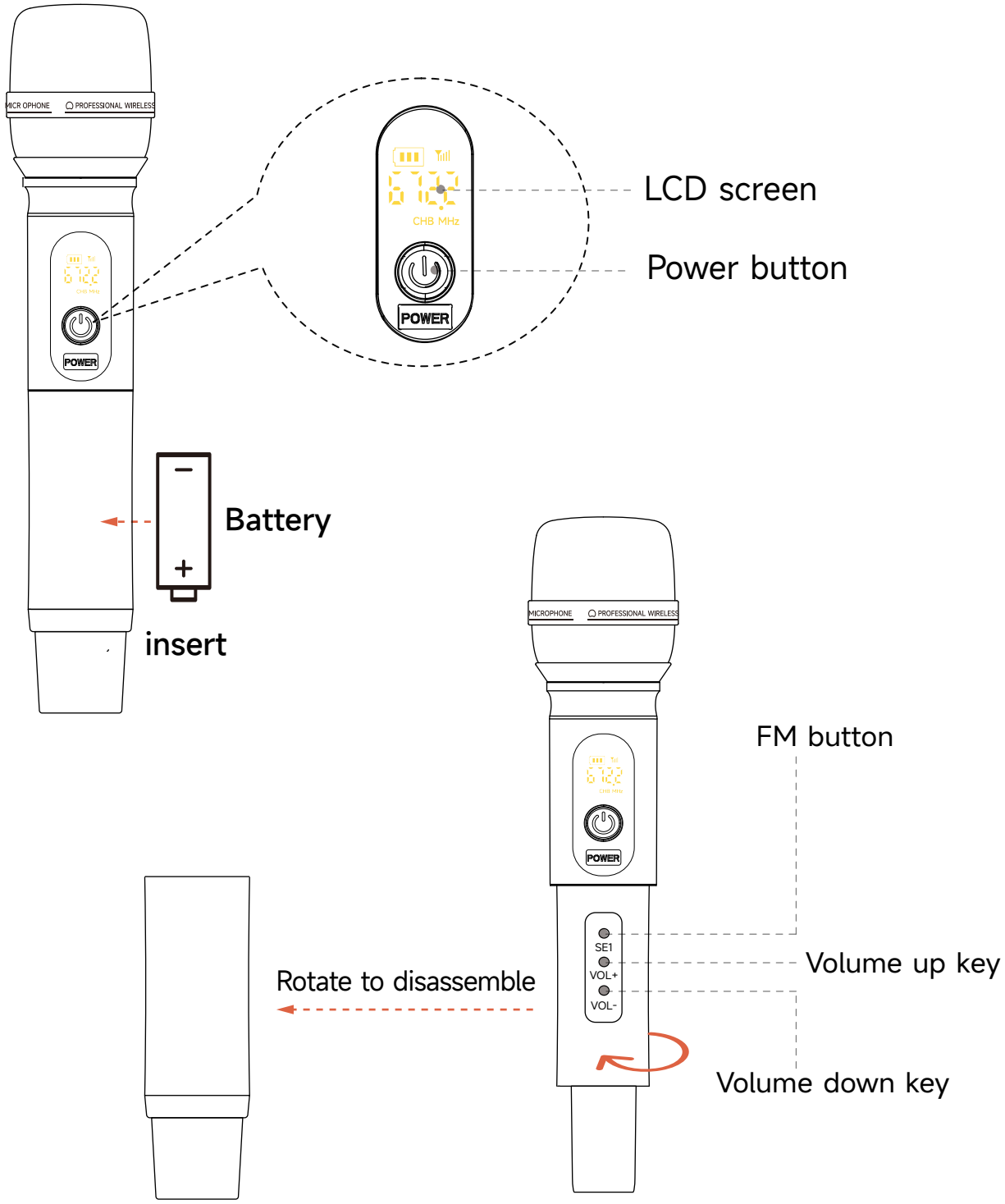

MICROPHONE

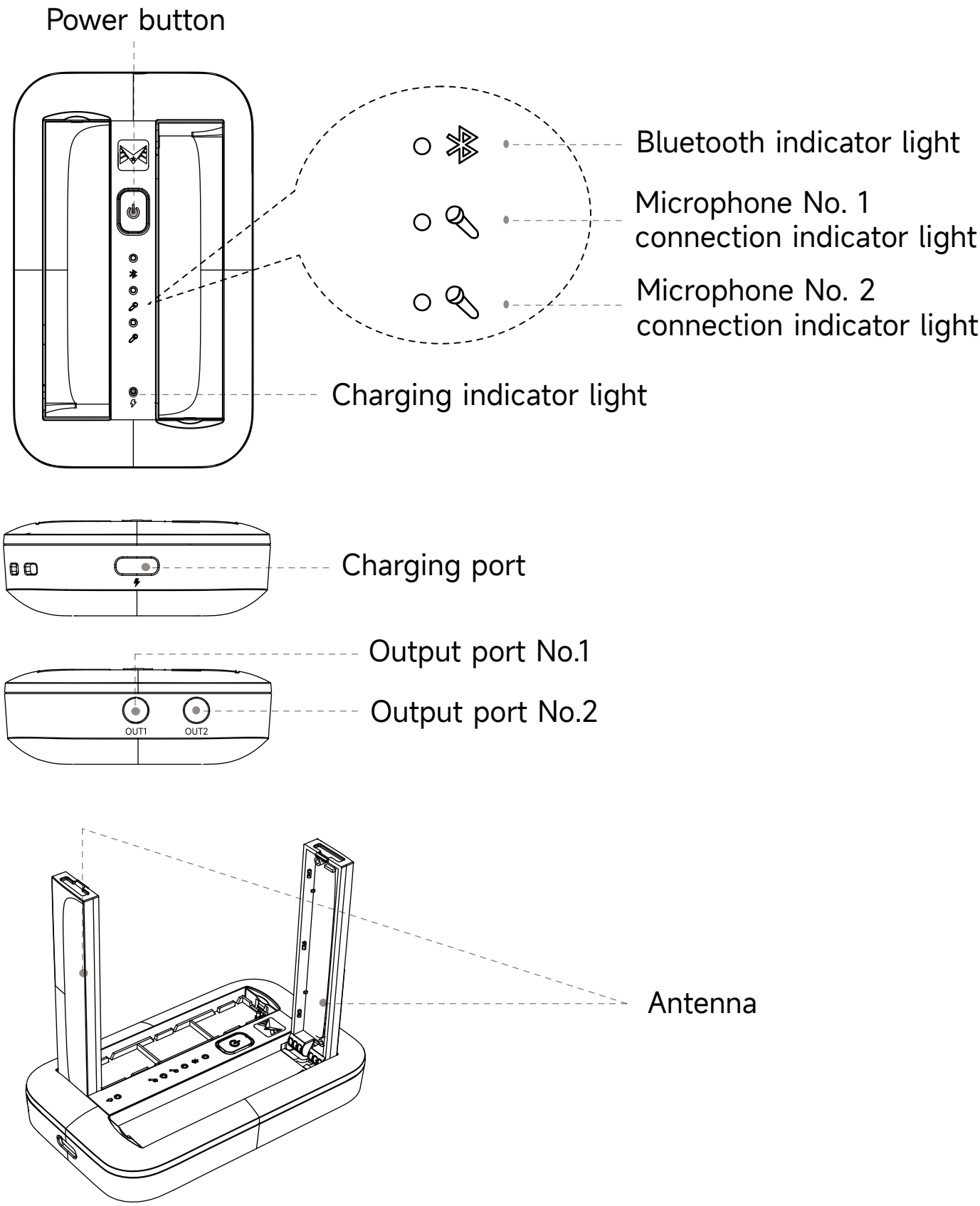
Power button
Bluetooth indicator light
Microphone No. 1
connection indicator light
Microphone No. 2
connection indicator light
Charging indicator light
Charging port
Output port No.1
Output port No.2
OUT1
OUT2
Antenna

RECEIVE

OPERATION GUIDE

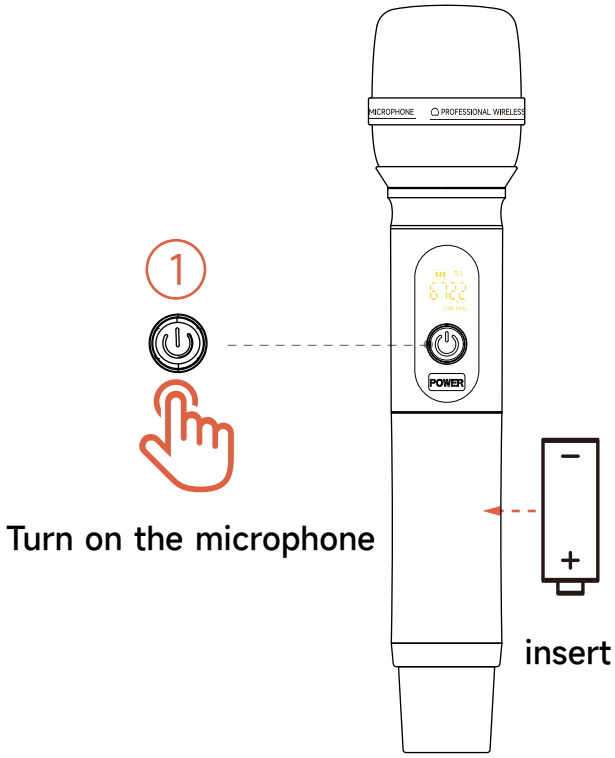

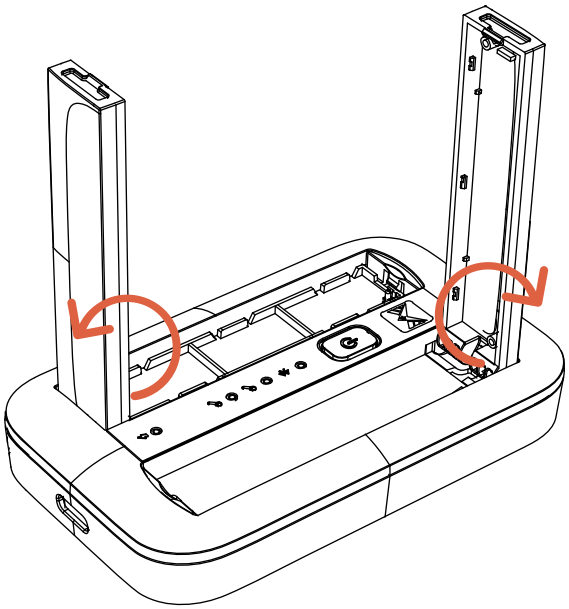

2 Turn on the receiver antenna

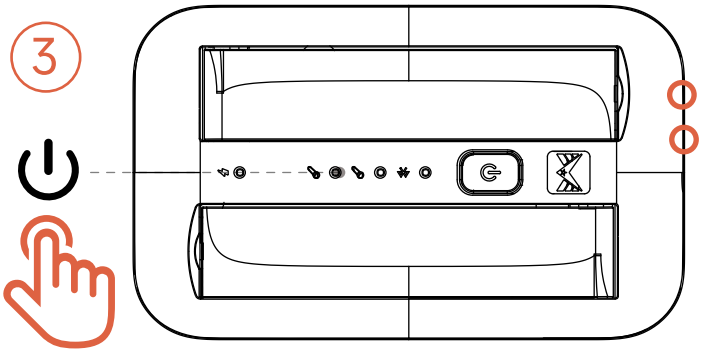

The receiver is turned on

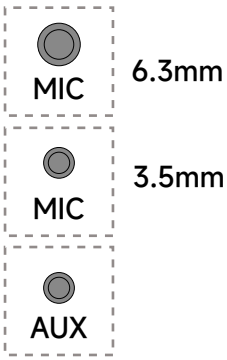

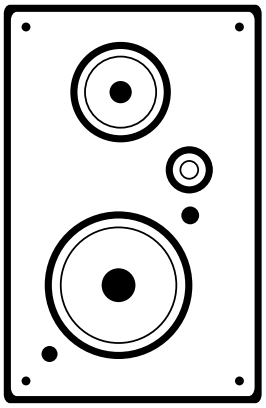

4

The receiver inserts the mic jack

INDICATOR LIGHT DESCRIPTION

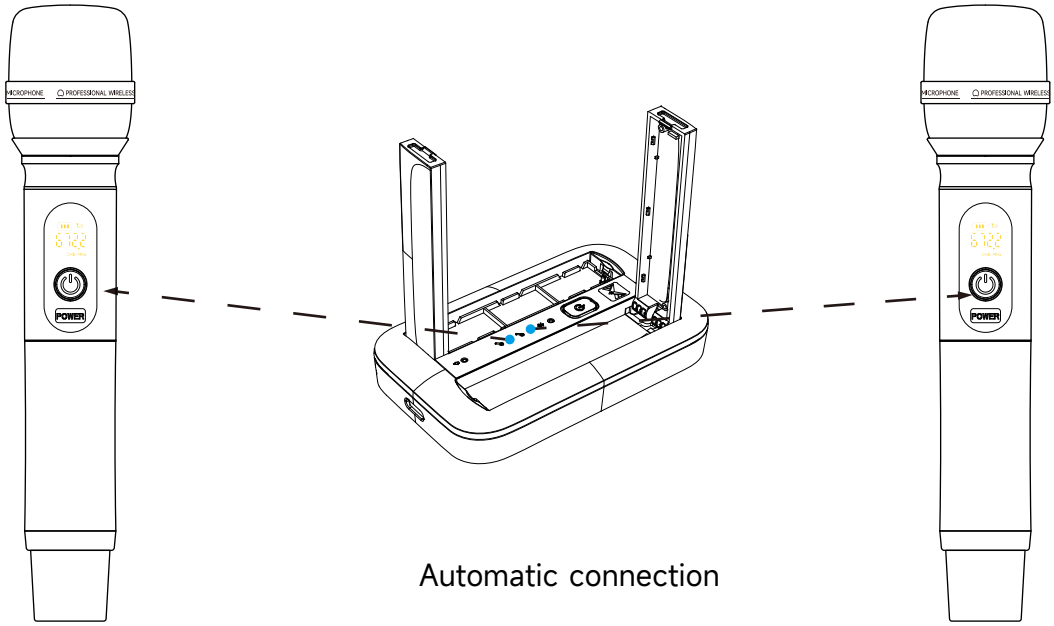

1. Long press the microphone and receiver's power button to turn on
2. The indicator light flashes when the microphone and receiver are not connected, and stays on when connected

CHARGING STATUS

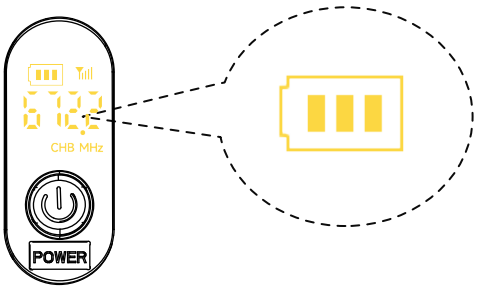

When charging, the charging icon flashes. When fully charged, the charging icon is full. When the battery is low, the charging icon flashes with spaces. Please charge in time.

TROUBLESHOOTING

Q1: Why I can't turn on the machine?

A1: Since the product was delivered by a long-term shipment by ship, the battery needs to be charged to reboot, so you can charge more than 12 hours to reactive the battery.

NOTE: This equipment has been tested and found to comply with the limits for a Class B digital device, pursuant to part 15 of the FCC Rules. These limits are designed to provide reasonable protection against harmful interference in a residential installation. This equipment generates, uses and can radiate radio frequency energy and, if not installed and used in accordance with the instructions, may cause harmful interference to radio communications. However, there is no guarantee that interference will not occur in a particular installation. If this equipment does cause harmful interference to radio or television reception, which can be determined by turning the equipment off and on, the user is encouraged to try to correct the interference by one or more of the following measures:

- Reorient or relocate the receiving antenna.

- Increase the separation between the equipment and receiver.

-Connect the equipment into an outlet on a circuit different from that to which the receiver is connected.

-Consult the dealer or an experienced radio/TV technician for help.

Changes or modifications not expressly approved by the party responsible for compliance could void the user's authority to operate the equipment.

This device complies with Part 15 of the FCC Rules. Operation is subject to the following two conditions:

(1) this device may not cause harmful interference, and (2) this device must accept any interference received, including interference that may cause undesired operation.