Manufacturer: Guangdong Branch of China Zhenhua Group Yunke Electronics Co., LTD
Address: China Electronics Dongguan Industrial Base (Sanda Industrial Park), Chigang Community, Humen Town, Dongguan City

1. FEATURES:

- Light weight, compact
- Wide bandwidth, low cost
- Built-in antenna with high gain

2. APPLICATIONS:

- Bluetooth, Wireless LAN, Mobile TV
- Home RF system, etc

3. PRODUCT IDENTIFICATION

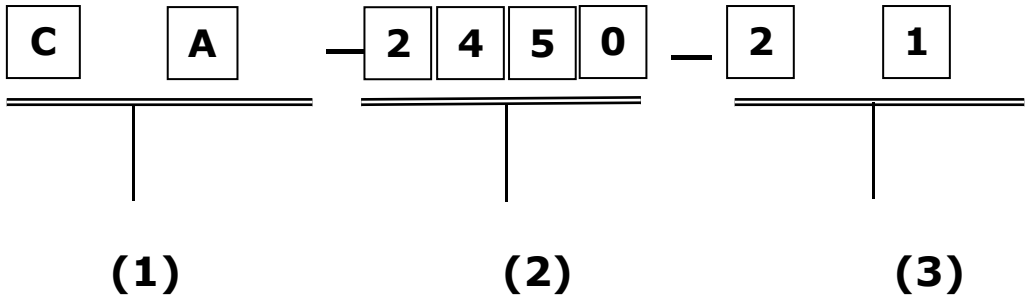

(1) Product type: Chip Antenna
(2) Center Frequency: 2450MHz
(3) 21 : External Dimensions (L×W) (mm):2.0*1.2
31 : External Dimensions (L×W) (mm):3.1*1.6

4. SHAPE AND DIMENSIONS:

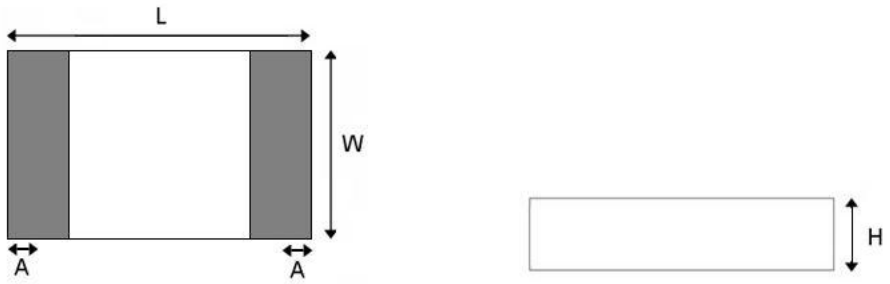

SHAPE AND DIMENSIONS

Manufacturer: Guangdong Branch of China Zhenhua Group Yunke Electronics Co., LTD
Address: China Electronics Dongguan Industrial Base (Sanda Industrial Park), Chigang Community, Humen Town, Dongguan City

Style	L	W	C	d	t
2012	2.00±0.10	1.2±0.10	0.40±0.20	0.40±0.20	0.50±0.10
3216	3.10±0.10	1.55±0.10	0.50±0.30	0.40±0.20	0.50±0.10

Reference dimensions of the test board:

Unit：**mm**

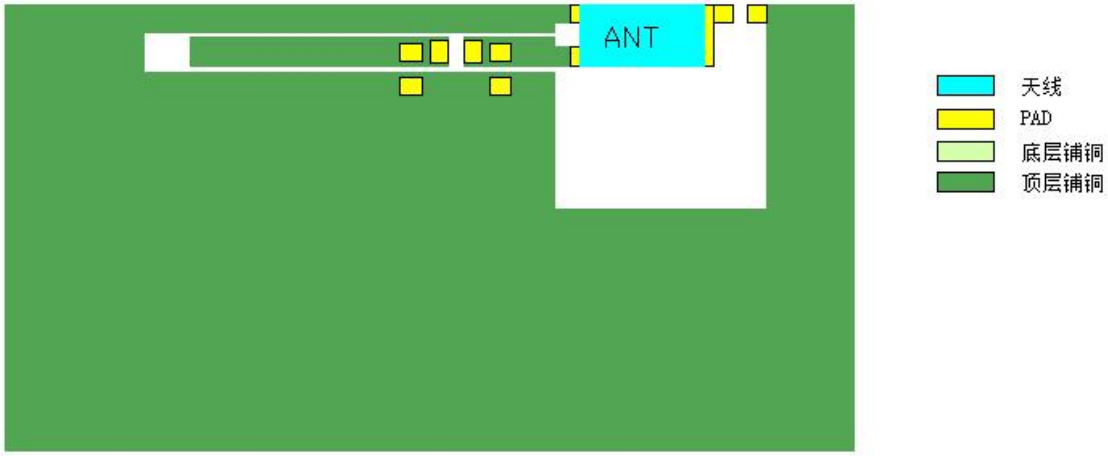

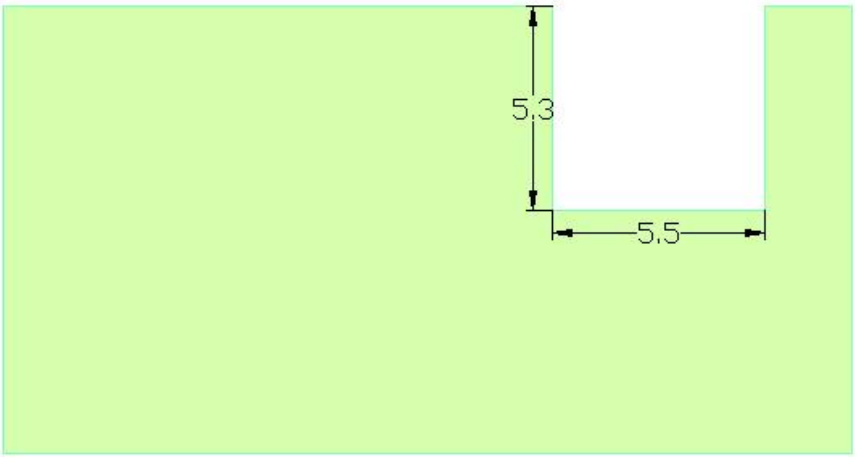

Manufacturer: Guangdong Branch of China Zhenhua Group Yunke Electronics Co., LTD
Address: China Electronics Dongguan Industrial Base (Sanda Industrial Park), Chigang Community, Humen Town, Dongguan City

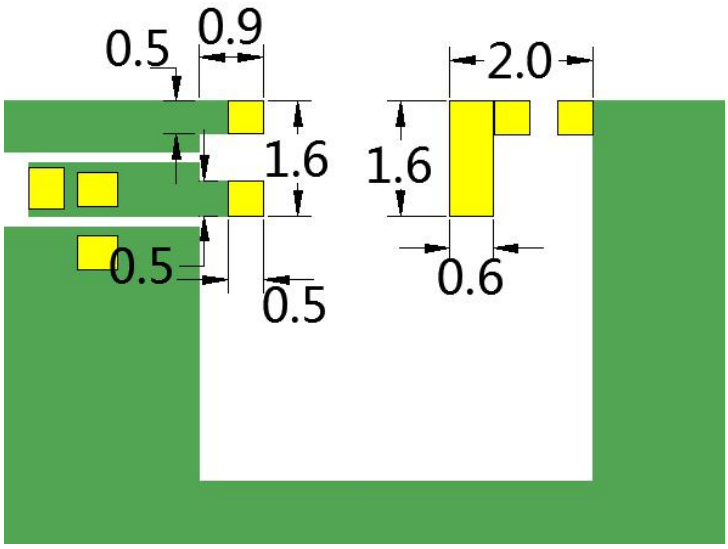

Reference schematic diagram for drilling

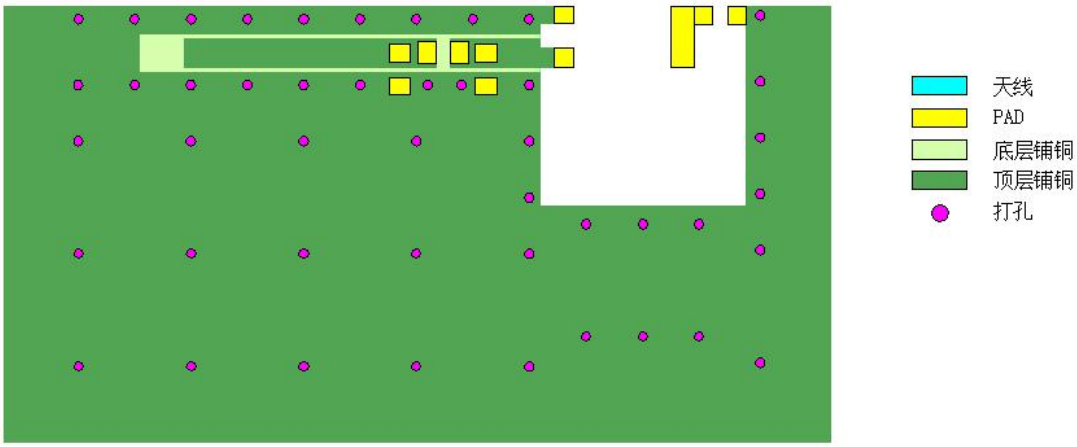

Manufacturer: Guangdong Branch of China Zhenhua Group Yunke Electronics Co., LTD
Address: China Electronics Dongguan Industrial Base (Sanda Industrial Park), Chigang Community, Humen Town, Dongguan City

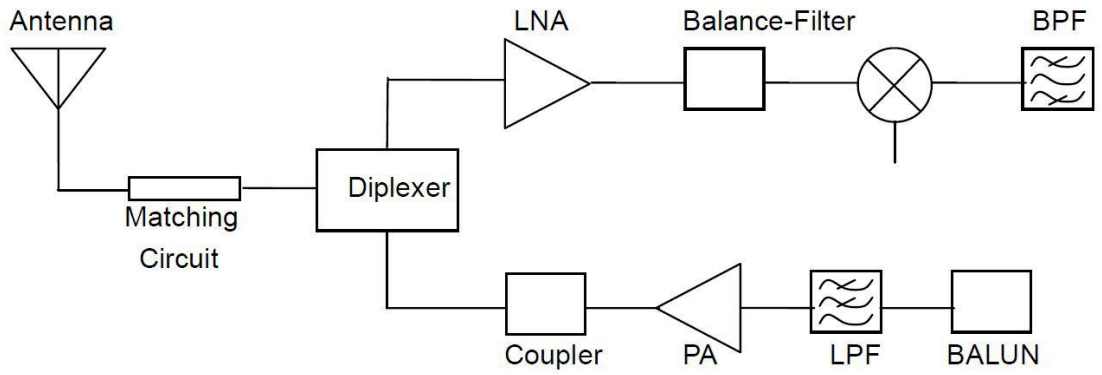

5. SPECIFICATIONS:

Test items	Specification
Bandwidth	2400~2483MHz
Polarization mode	Linear polarization
Maximum gain	2.67dBi
Efficiency	72.30%
Input impedance	50Ω

*** Test condition: Test board size 90*40 mm**
Matching circuit: Pi matching circuit will be required

6. Electrical Characteristics :

Return loss

Manufacturer: Guangdong Branch of China Zhenhua Group Yunke Electronics Co., LTD
Address: China Electronics Dongguan Industrial Base (Sanda Industrial Park), Chigang Community, Humen Town, Dongguan City

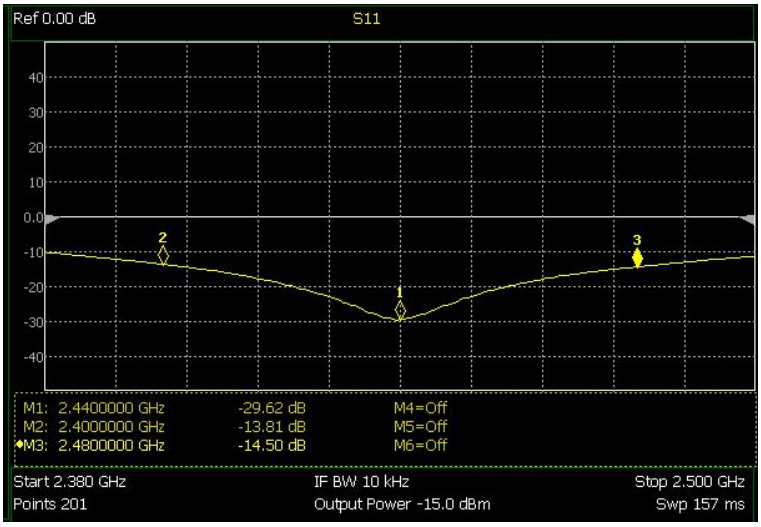

VSWR/SWR

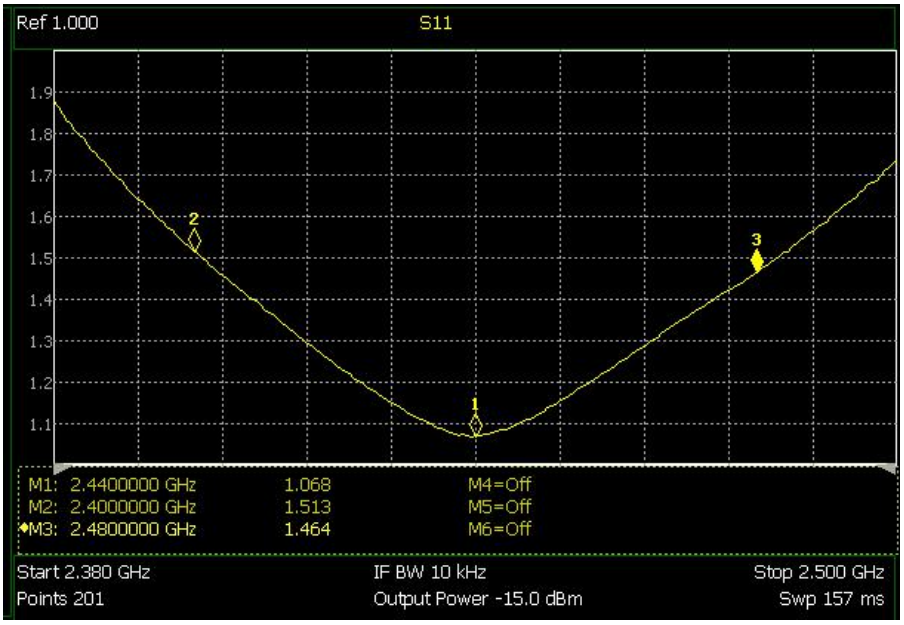

Mark	Frequency	VSWR
1	2400 MHz	1.513
2	2440 MHz	1.068
3	2480 MHz	1.464

Radiation Pattern

The Gain pattern is measured in FAR-field chamber. DUT is placed on the table of rotator, a standard horn antenna and Vector Network Analyzer is used to collect data.

Manufacturer: Guangdong Branch of China Zhenhua Group Yunke Electronics Co., LTD
Address: China Electronics Dongguan Industrial Base (Sanda Industrial Park), Chigang Community, Humen Town, Dongguan City

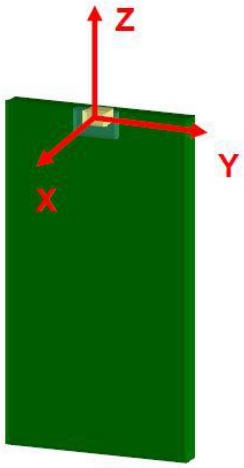

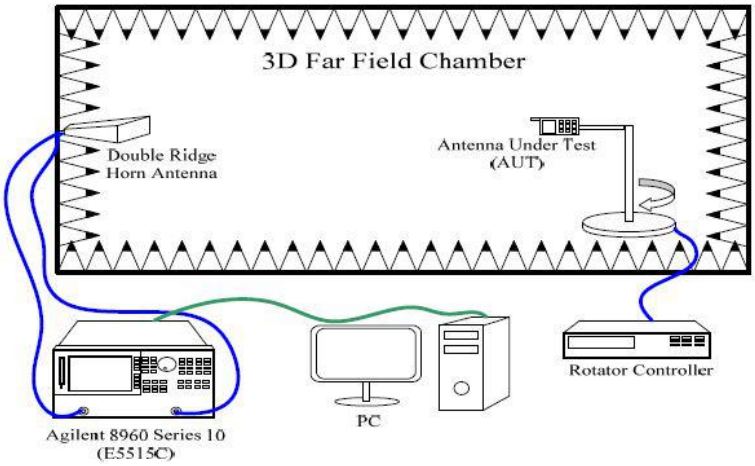

◎ Efficiency

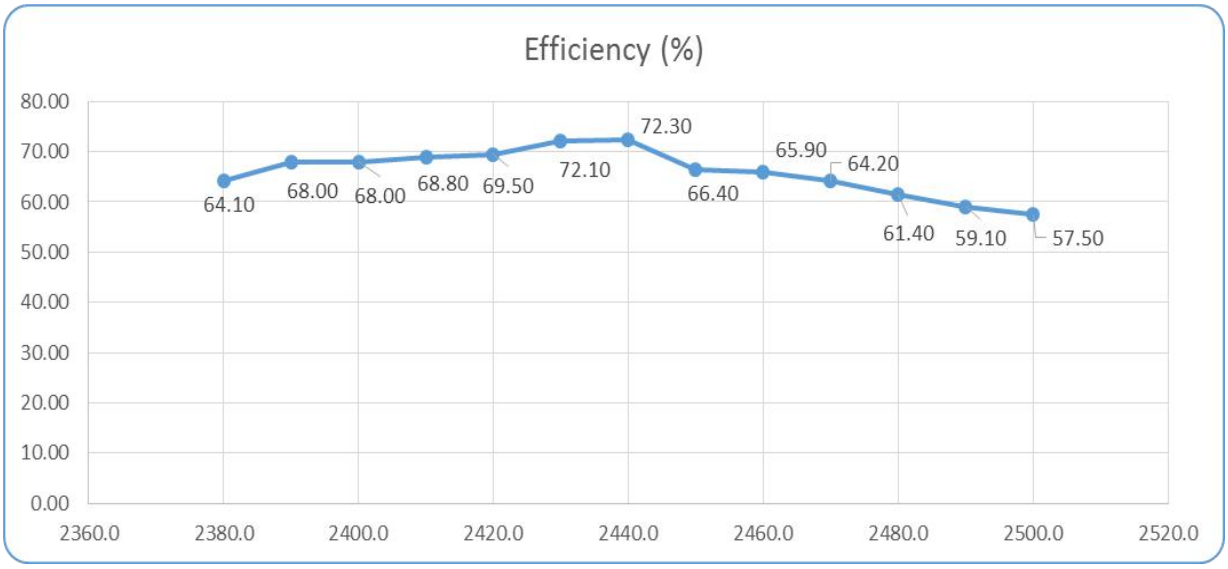

◎ Maximum Gain

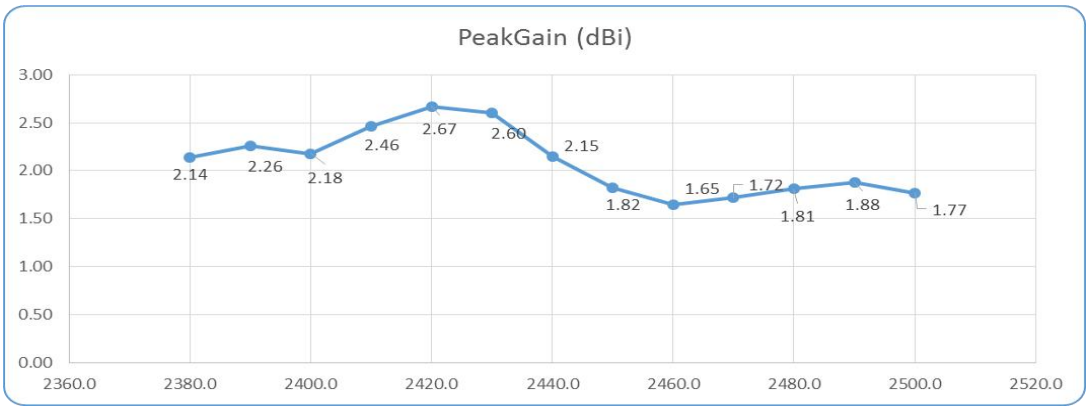

Manufacturer: Guangdong Branch of China Zhenhua Group Yunke Electronics Co., LTD
Address: China Electronics Dongguan Industrial Base (Sanda Industrial Park), Chigang Community, Humen Town, Dongguan City

◎ 3D Gain Pattern (2400 MHz)

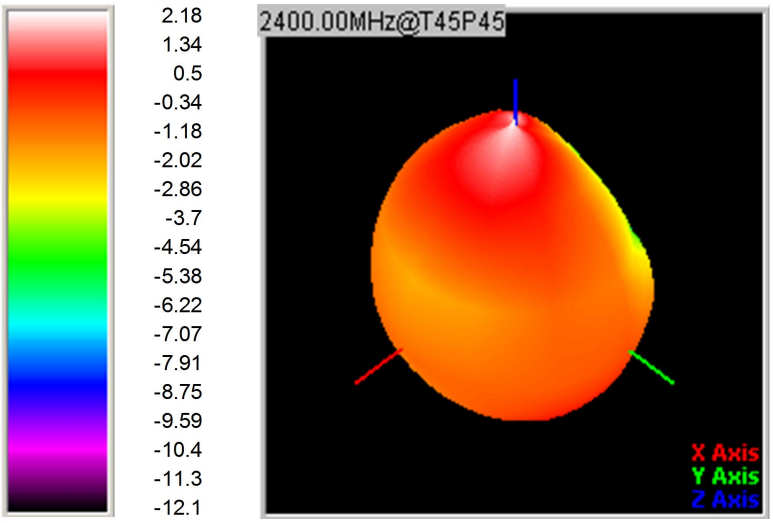

◎ 3D Gain Pattern (2440 MHz)

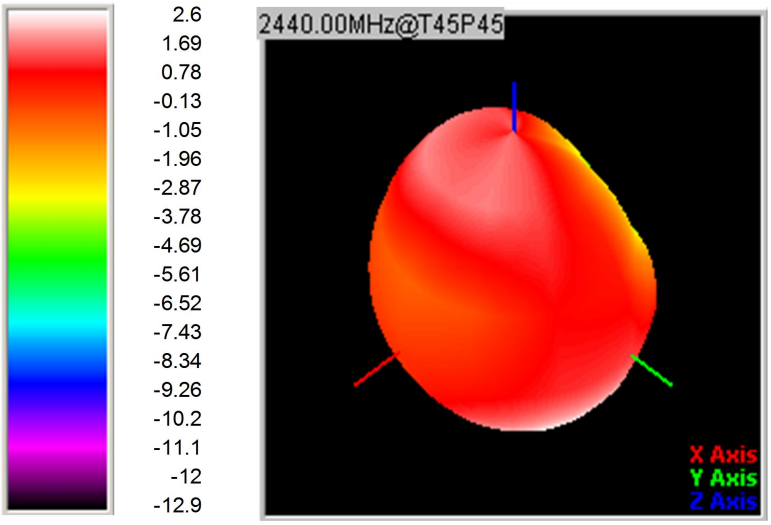

◎ 3D Gain Pattern (2480 MHz)

Manufacturer: Guangdong Branch of China Zhenhua Group Yunke Electronics Co., LTD
Address: China Electronics Dongguan Industrial Base (Sanda Industrial Park), Chigang Community, Humen Town, Dongguan City

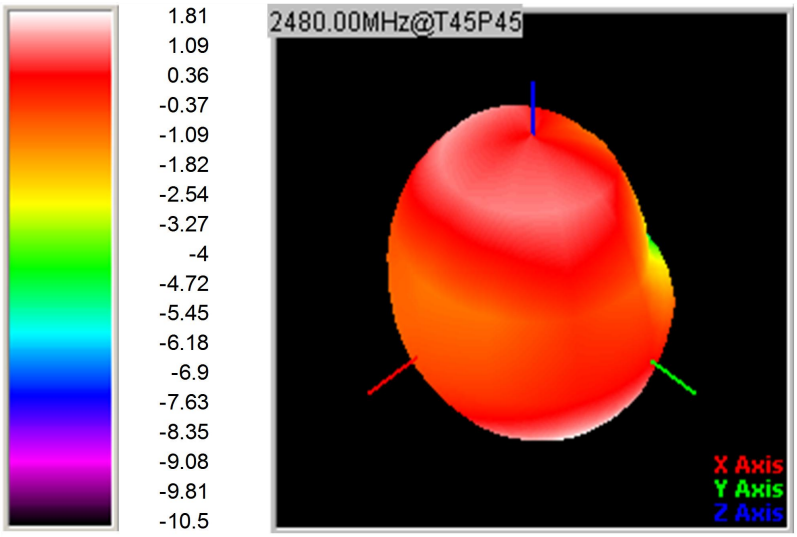

7. Environmental Characteristics

(1) Reliability Test

Item	Condition	Specification
Thermal shock	1. 30±3 minutes at -40° C±5° C, 2. Convert to +105° C (5 minutes) 3. 30±3 minutes at +105° C±5° C, 4. Convert to -40° C (5 minutes) 5. Total 100 continuous cycles	No apparent damage Fulfill the electrical spec. after test.
Humidity resistance	1. Humidity: 85% R.H. 2. Temperature: 85±5° C 3. Time: 1000 hours.	No apparent damage Fulfill the electrical spec. after test.
High temperature resistance	1. Temperature: 150° C±5° C 2. Time: 1000 hours.	No apparent damage Fulfill the electrical spec. after test.
Low temperature resistance	1. Temperature: -40° C±5° C 2. Time: 1000 hours.	No apparent damage Fulfill the electrical spec. after test.
Soldering heat resistance	1. Solder bath temperature : 260±5℃ 2. Bathing time: 10±1 seconds	No apparent damage
Solderability	The dipped surface of the terminal shall be at least 95% covered with solder after dipped in solder bath of 245±5℃ for 3±1 seconds.	No apparent damage

(2) Storage Condition

(a) At warehouse:

The temperature should be within 0 ~ 30℃ and humidity should be less than 60% RH.

The product should be used within 1 year from the time of delivery.

(b) On board:

The temperature should be within -40~85℃ and humidity should be less than 85% RH.

(3) Operating Temperature Range

Operating temperature range : -40℃ to +105℃.

8. Recommended Reflow Soldering

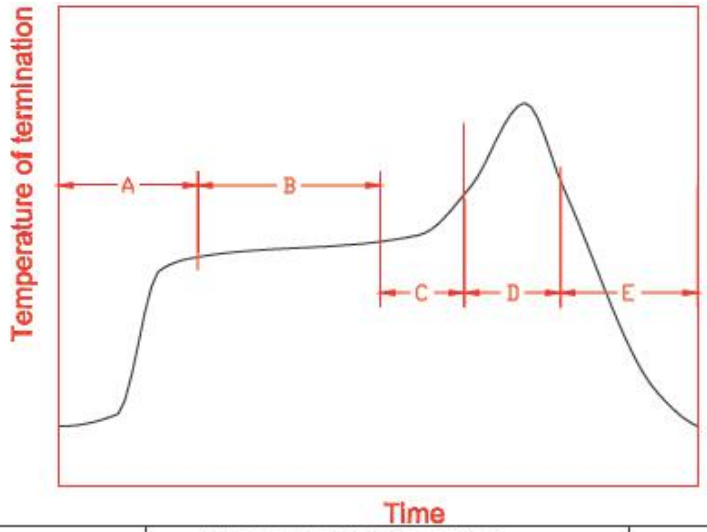

A	1st rising temperature	The normal to Preheating temperature	30s to 60s
B	Preheating	140℃ to 160℃	60s to 120s
C	2nd rising temperature	Preheating to 200℃	20s to 40s
D	Main heating	if 220℃	50s～60s
		if 230℃	40s～50s
		if 240℃	30s～40s
		if 250℃	20s～40s
		if 260℃	20s～40s
E	Regular cooling	200℃ to 100℃	1℃/s ～ 4℃/s

*reference: J-STD-020C

(1) Soldering Gun Procedure

Note the follows, in case of using solder gun for replacement.

(a) The tip temperature must be less than 350℃ for the period within 3 seconds

By using soldering gun under 30 W.

(b) The soldering gun tip shall not touch this product directly.

(2) Soldering Volume

Note that excess of soldering volume will easily get crack the body of this product.

9. Taping Package and Label Marking: (unit: mm)

(1) Quantity/Reel: 5000pcs/Reel

(2) Carrier tape dimensions

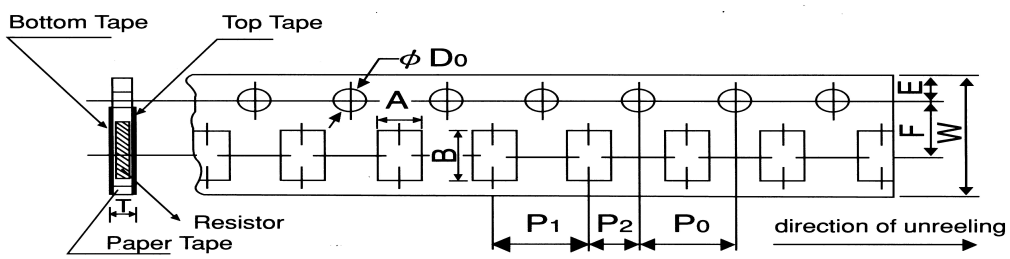

Packing	Style	A	B	W	F	E	P_1	P_2	P_0	D_0	T
Paper	2012	1.6±0.15	2.4±0.2	8.0±0.2	3.5±0.05	1.75±0.1	4.0±0.1	2.0±0.05	4.0±0.1	$\phi 1.5^{+0.1}_{-0}$	**0.84±0.1**
Paper	3216	2.0±0.15	3.6±0.2	8.0±0.2	3.5±0.05	1.75±0.1	4.0±0.1	2.0±0.05	4.0±0.1	$\phi 1.5^{+0.1}_{-0}$	**0.84±0.1**

(3) Taping reel dimensions

Manufacturer: Guangdong Branch of China Zhenhua Group Yunke Electronics Co., LTD
Address: China Electronics Dongguan Industrial Base (Sanda Industrial Park), Chigang Community, Humen Town, Dongguan City

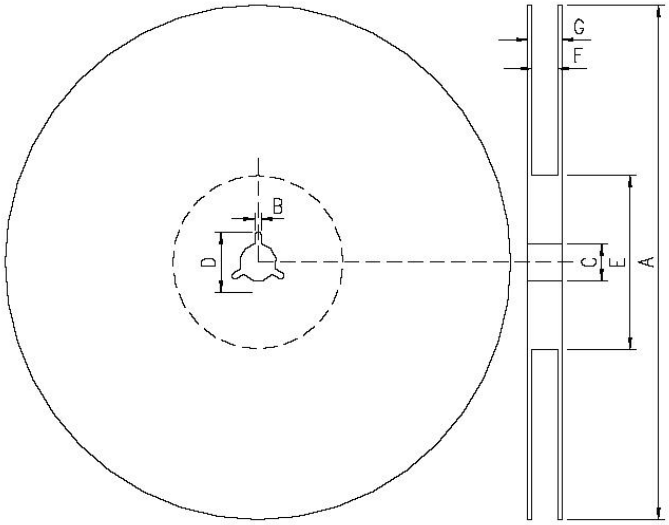

A	178.0±2.0
B	2.0±0.5
C	13.0±0.5
D	21.0±0.8
E	62.0±1.5
F	9.0±0.5
G	13.0±1.0