LaserTonor

LaserTonor Pi 1

Instruction

Product Name :	LaserTonor
Model :	Pi 1
Version Number & Release Date:	2024-10A

Contents

01. List of Accessories

02. Button/ Indicator Instructions

03. Quick Installation Guide

04. Machine Function Guide

05. Bluetooth Connection

06. Product Specifications

07. Safety Guidelines

08. Disclaimer

09. Copyright Notice

01. List of product accessories

Standard parts:

Engraver

Electric Supporting Track

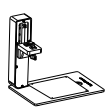

Protective Shield

Engraving& Cutting 2-in-1 Plate

Goggles

Data Cable

Power Adapter

02. Button Indicator Light Instructions

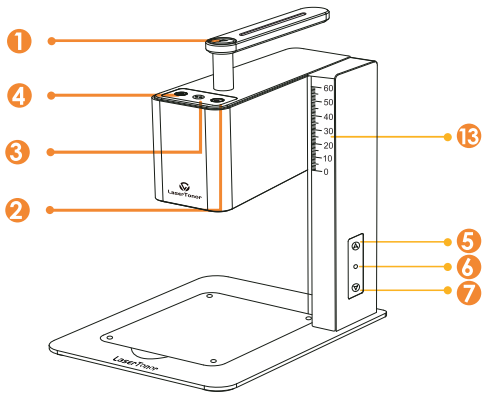

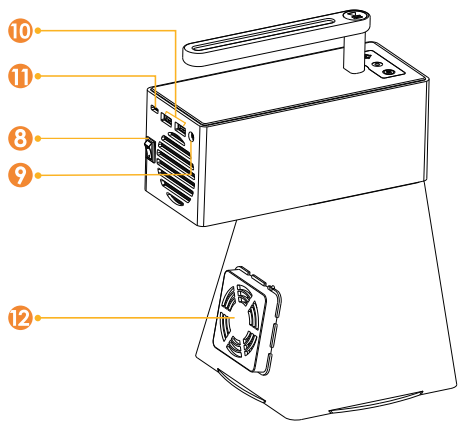

Button Indicator Light Instructions

1. Pause/Resume Engraving Button
2. Preview Button
3. Main Unit Indicator Light
4. End Button
5. Long Press to Focus up
   (Short Press for 1mm Focus up)
6. Electric Stand Indicator Light
7. Long Press to Focus down
   (Short Press for 1mm Focus down)
8. Power Switch
9. Main Unit DC Power Port
10. USB Port
11. Type-C Port
12. Exhaust Fan
13. Scale marking

03. Quick Installation Guide

3.1 Unfold the Electric Supporting Track

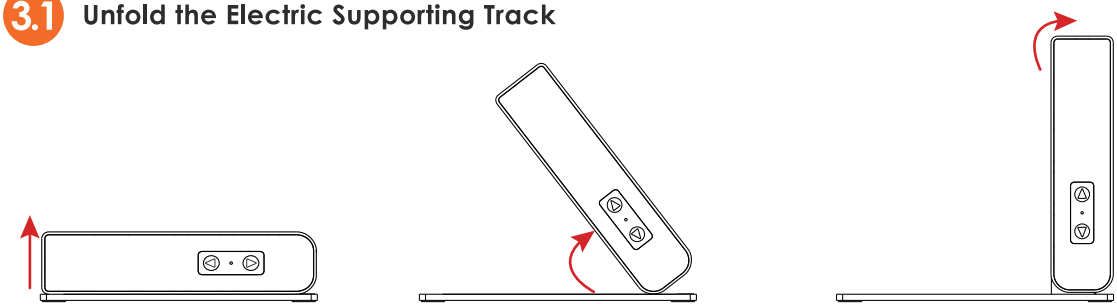

3.2 Secure the Main Unit to the Electric Supporting Track, Connect the Power Supply, and Turn On the Power Switch

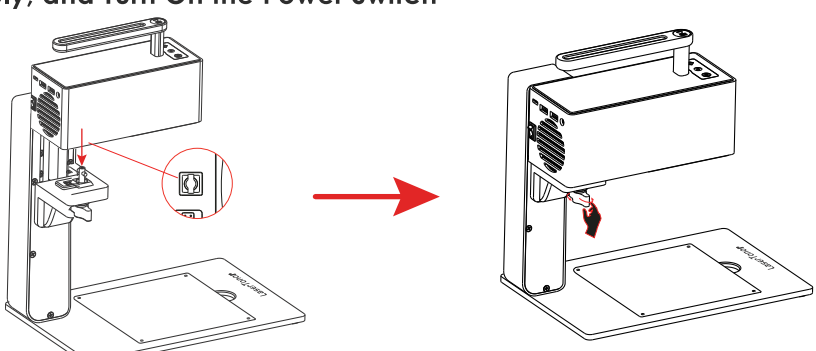

03. Quick Installation Guide

3.3 Focusing Distance Measurement

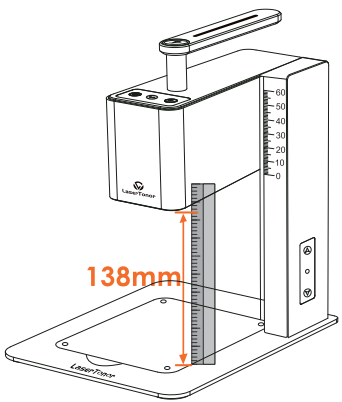

(Method A)

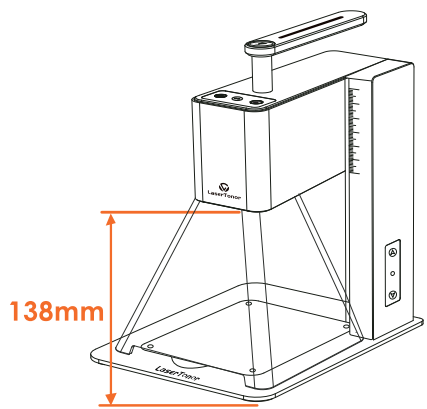

(Method B)

Method A : Place the object, adjust the electric Supporting Track height, and use a ruler to measure, ensuring the distance between the bottom of the main unit and the object's surface is 138mm.

Method B : After installing the Protective Shield, place the engraving item, adjust the electric Supporting Track height, and ensure the bottom of the laser protective shield contacts the surface of the engraved object, with the bottom of the main unit maintaining a distance of 138mm from the surface of the engraved object.

04. Feature Installation and Operation Instructions

4.1 Handheld Engraving

4.1.1. Installation

Attach the magnet on top of the protective shield to the main unit. Connect the exhaust fan to the interface on the back of the main unit, then plug in the power cable.

4.1.2. Handheld Engraving Focus Distance

Align the laser protective shield with the surface of the object to be engraved

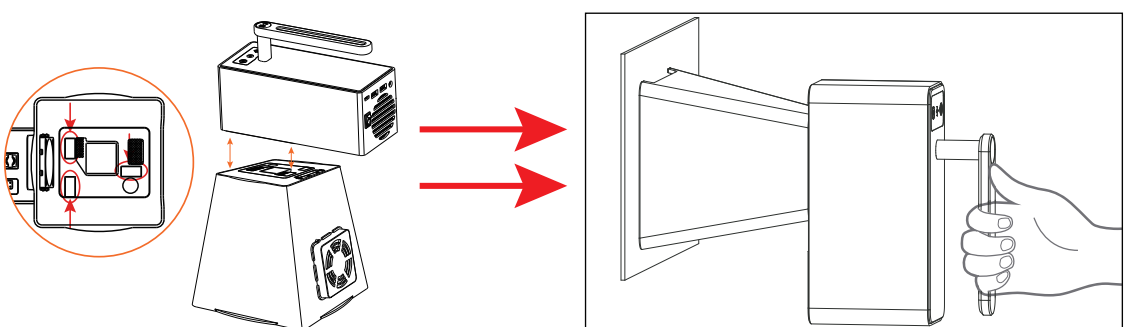

04. Feature Installation and Operation Instructions

4.2 Off-line Engraving

4.2.1. Operation Method

Place the engraving object, adjust the Electric Supporting Track height, click the Preview button, and press and hold both the Preview and End buttons for 2 seconds.

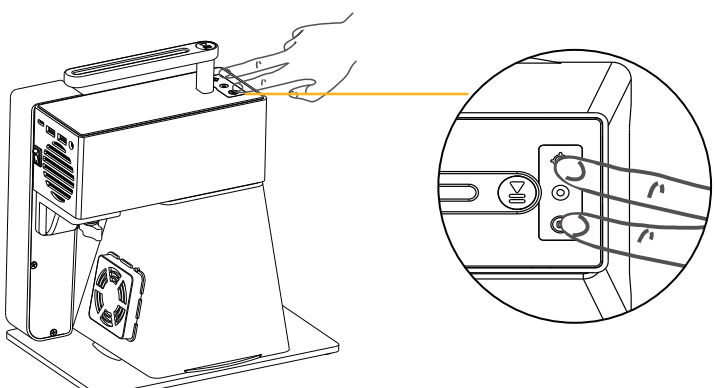

NOTE:

(The offline engraving stores the last image data from the machine's previous engraving)

05. Bluetooth Connection

5.1 Bluetooth Connection Installation

a. Ensure the device is fully installed. Open the app and search for the device to connect.

b. In the engraving parameter settings interface, click **Preview** and select **Manual Connection** or **Auto Connection** for Bluetooth.

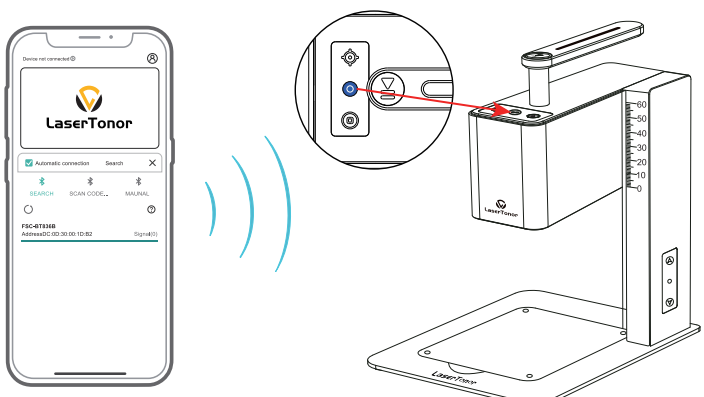

5.1 Bluetooth Indicator Lights

- The main unit indicator flashing blue means Bluetooth is connecting.
- The main unit indicator staying solid blue means Bluetooth is connected

06. Product specifications

Specification

Model	LaserTonor Pi 1
Weight	1.93kg
Size	Engraver: 75.6mm*179.31mm*110.7mm Electric Supporting Track: 150mm*225mm*215.5mm
Appearance and Material	Anodized Aluminum Alloy, Metallic Rose, Picasso Blue
Laser Source	450nm Diode Laser
Communication	High-Speed Bluetooth 5.0, USB Type-C Wired Interface, Compatible with iOS 9.0+, Android 6.0+, macOS 10+, Windows 10+
Power Input	DC (12V 5A), AC (110-240V/50-60Hz)
Supported File Formats	JPG, SVG, PNG, BMP, DWG, Gcode, CAD, AI, CDR, CorelDRAW, PLT
Laser Lifetime	>10,000 hours
Operating Temperature Range	0°C - 55°C
Engraving Area	100x100mm, 100x2000mm (Using the Rotary Roller)

07. Safety Guidelines

Safety Guidelines

Thank you for choosing LaserTonor. To ensure the safe operation of the device and avoid any unforeseen risks, please carefully read the following safety precautions and strictly follow the operating guidelines.

1. Preparation for Operation

- **Read the Manual Carefully:** Before operating the device, please read the user manual thoroughly to familiarize yourself with all functions and safety requirements.
- Ensure no flammable or explosive materials are nearby. Keep the workspace clean and well-ventilated to reduce harmful gas buildup.
- Place the device on a level, stable surface to avoid abnormal operationdue to vibration or tilting.

2. Laser Operation Safety

- Laser radiation can ignite flammable materials, release toxic fumes, or cause skin burns and eye injuries. Avoid inhalation of fumes, and never expose yourself to the laser beam.
- Always wear protective equipment (goggles, shields, clothing) and maintain a safe distance while the device is in operation.
- Do not place flammable, explosive, or reflective materials in the work area to prevent hazards from laser reflection.

3. Electrical Safety

- The device operates at 12V 5A; ensure you use the appropriate power adapter and check the grounding of the socket to avoid electrical shock risks.
- Avoid placing the device near strong electromagnetic sources (e.g., microwaves, high-power appliances), which could affect performance.

4. Material Selection and Operational Caution

- Verify the material is suitable for laser engraving to avoid fire hazards or harmful gas emissions, especially with plastics or PVC.
- Securely fix the engraving material to prevent movement or vibrations, which can cause accidents or affect engraving results.
- If abnormal sounds, overheating, or malfunctions occur, stop using the device immediately, turn off the power, and consult a professional technician.

07 Safety Guidelines

Safety Guidelines

5. Work Environment Requirements

- Ensure the environment is between 0°C and 55°C, with a humidity range of 30% - 65% RH (no condensation). Provide adequate ventilation to expel harmful exhaust gases.
- Do not store flammable, explosive, or reflective materials in the work area.

6. Laser Emission Management

- Use an exhaust system to expel laser engraving exhaust outdoors, in compliance with local regulations. Regularly clean the device and surrounding environment to prevent dust buildup.

7. Emergency Procedures

- Keep fire extinguishers and fire-fighting equipment on hand during operation. In case of fire, disconnect the power immediately and use appropriate fire-fighting tools.
- If the device malfunctions, overheats, or emits alarms, turn off the power and contact professional technicians. Do not attempt to disassemble the device.

8. Prohibited Actions

- Do not modify the device, use non-original components, or power the device with an unsuitable power supply. Avoid placing the device in environments with extreme temperature, humidity, strong vibration, or corrosive conditions.

Important Reminder

- Please follow these safety guidelines strictly to avoid unforeseen risks. If you have any questions, contact the device supplier or after-sales support team.

08. Disclaimer

Disclaimer

Thank you for choosing the LaserTonor Pi 1 Laser Engraver. Please read this disclaimer, the accompanying safety guidelines, and the user manual carefully before using the product. By using this product, you acknowledge that you have read, understood, and accepted all terms and conditions outlined in this disclaimer, and agree to strictly adhere to the relevant regulations. Failure to follow the instructions in this disclaimer and user manual may result in personal injury, equipment damage, or adverse effects on the surrounding environment. The manufacturer of LaserTonor Pi 1, **Xiyou Jiguang (LaserTonor)**, is not responsible for any direct or indirect losses, damages, or legal liabilities caused by improper use of the product.

1. User Responsibilities

- Users are fully responsible for the operation of the device and any consequences that may arise (including but not limited to impacts on personnel, property, or the environment).
- Users agree to comply with all operational guidelines, relevant policies, and safety protocols established by Xiyou Jiguang (LaserTonor), including this disclaimer.

2. Safety Warnings

- Laser engraving is a precision operation that carries potential risks (such as high temperatures, laser radiation, and harmful gas emissions). Please ensure that you have read and understood all accompanying safety warnings.
- Users must take necessary protective measures (such as wearing goggles, maintaining a ventilated workspace, and keeping the area free of flammable or explosive materials) to prevent injury or damage caused by improper operation or environmental factors.
- Unauthorized modifications, disassembly, or use of the device in any non-compliant manner are strictly prohibited.

3. Risks and Liability Statement

- Users must understand and accept that laser engraving operations may involve uncontrollable risks, such as fires caused by improper handling, damage to objects, or health risks (such as eye or skin injuries).
- The manufacturer and distributor of LaserTonor Pi 1 are not responsible for any damages, liabilities, or consequences arising from:
  - Failure to follow the user manual.
  - Use of non-original parts, consumables, or unauthorized modifications.
  - Use of the device for non-designated purposes or in violation of operational instructions.
  - Environmental factors (such as unstable voltage, poor ventilation, or high humidity) causing device damage or other consequences.

4. Legal Compliance

- Users must ensure that they use this product in compliance with local laws and regulations. In particular, emissions that may be generated during laser engraving must meet environmental requirements.
- Users are solely responsible for any legal liabilities resulting from the improper or illegal use of this product.

5. Modifications and Interpretation Rights

- Xiyou Jiguang (LaserTonor) reserves the right to make the final interpretation of this disclaimer and may modify the relevant terms as needed.
- Updated versions of this disclaimer will be published through official channels such as the website, user manuals, or other formal communication methods. Users are responsible for staying informed of updates and complying with the latest version.

Special Reminder

Before using this product, please ensure that you fully understand the operational requirements and take all necessary safety precautions. If you have any questions, please contact the official **LaserTonor** support team or authorized service center promptly.

09. Copyright Notice

Copyright Notice

This manual and all related content, including but not limited to the product software, hardware design, and documentation, are the intellectual property of **Xiyou Jiguang Technology Co., Ltd**. (hereafter referred to as Xiyou Jiguang). "LaserTonor" is a registered trademark of **Xiyou Jiguang** and is legally protected. Without written authorization from **Xiyou Jiguang**, the contents of this manual may not be reproduced, modified, reprinted, or distributed in any form, and are strictly for the personal reference and use of the product's purchaser. The content of this manual may be subject to adjustments due to technical updates without prior notice. The information provided is for reference purposes only and does not constitute a legal commitment. Thank you for choosing **LaserTonor**. We look forward to providing you with an efficient and safe laser engraving experience

LaserTonor

Xiyou Jiguang Technology Co., Ltd

We offer global online technical support services. If you encounter any issues during use, please feel free to contact us.

Email: LaserTonor@Gmail.com

This device complies with part 15 of the FCC Rules. Operation is subject to the following two conditions: (1) This device may not cause harmful interference, and (2) this device must accept any interference received, including interference that may cause undesired operation.

Any Changes or modifications not expressly approved by the party responsible for compliance could void the user's authority to operate the equipment.

Note: This equipment has been tested and found to comply with the limits for a Class B digital device, pursuant to part 15 of the FCC Rules. These limits are designed to provide reasonable protection against harmful interference in a residential installation. This equipment generates uses and can radiate radio frequency energy and, if not installed and used in accordance with the instructions, may cause harmful interference to radio communications. However, there is no guarantee that interference will not occur in a particular installation. If this equipment does cause harmful interference to radio or television reception, which can be determined by turning the equipment off and on, the user is encouraged to try to correct the interference by one or more of the following measures:

-Reorient or relocate the receiving antenna.

-Increase the separation between the equipment and receiver.

-Connect the equipment into an outlet on a circuit different from that to which the receiver is connected.

-Consult the dealer or an experienced radio/TV technician for help.

FCC Radiation Exposure statement

The device has been evaluatec to meel general RF exposure requirement. The device can be used in portable exposure condition without restriction.