Dongguan ZhongChi Electronic Technology Co.,Ltd Specification Acknowledgement

Customer：

Customer P/N：

Zhong Chi P/N： ZCA2400-017W100-00X

Description 2.4G Antenna

ZhongchiChecked By:	Customer Approved By:

Product Number:ZCA2400-017W100-00X
Product Name: 2.4G Antenna

Index:

1. Revision History / Page 3
2. Specification / Page 4
3. Characteristics and Reliability Test / Page 5
4. Antenna - S Parameter Test Data / Page 6
5. Antenna - Radiation Pattern Test Data / Page 7
6. Mechanical and Packing Drawing / Page 8 ~ 9

Product Number:ZCA2400-017W100-00X
Product Name: 2.4G Antenna

1. Specification

Sample Photo	
A. Electrical Characteristics	
Frequency	2400-2500 MHz
V.S.W.R.	<= 1.92
ReTurnLoss(dB)	-10 dB Max
Antenna Gain	3.27dBi
Polarization	Linear，Vertical
Impedance	50 ohm Nominal
Admitted Power	2 W
Radiation	Omni-directional
B. Material & Mechanical Characteristics	
Material of Plastic	ABS / PC
Cable Type	O.D. 1.13 MM
Connector Type	Mini Connector Au Plated 1代
C. Environmental	
Operation Temperature	- 40 ˚C ~ + 80 ˚C
Storage Temperature	- 40 ˚C ~ + 80 ˚C

2. Characteristics and Reliability Test

Test Items		Test Condition and Procedure	Requirements
C1	V.S.W.R.	Set DUT on Network Analyzer; make individual calibration to test	Directive DUT specification
C2	Antenna Gain	Set DUT on Antenna Chamber; make individual calibration to test	Directive DUT specification

Product Number:ZCA2400-017W100-00X
Product Name: 2.4G Antenna

M1	Vibration	MIL-STD-202G, 201A Amplitude: 0.03 inch (0.76mm); Freq: 10 to 55 Hz 3 directions; 2 hours for each direction	1. No Visual Damage 2. Frequency Tol.<= 5%
M2	Random Drop	Height: 1.5 Meter; 3 directions; 1 time for each direction	1. No parts separated 2. Frequency Tol.<= 5%
M3	Solderability	MIL-STD-202G, 210F, cond. A Solder iron: 350±10°C; Duration: 5 seconds	1. Mounted on PCB 2. No Visual Damage
M4	Terminal-Pull Test	MIL-STD-202G, 211A, cond. A Holding with individual specification; force applied to axis of terminal	1. Directive DUT specification 2. Frequency Tol.<= 5%
M5	Terminal-Torque Test	MIL-STD-202G, 211A, cond. E Holding with individual specification; applied clockwise and counterclockwise to the axis of terminal	1. Directive DUT specification 2. Frequency Tol.<= 5%
M6	Dimension	Inspection of dimension, color, material, package, surface process	Directive DUT specification
E1	Salt Spray	MIL-STD-202G, 101E, cond. B Temp: 35°C; RH: >= 95%; NaCl solution: >= 5%; Time: 24 hours	After 2 Hours Recovery 1. No Visual Damage 2. Frequency Tol.<= 5%
E2	Humidity	MIL-STD-202G, 103B, cond. B Temp: 40°C; RH: >= 95%; Time: 24 hours	After 2 Hours Recovery 1. No Visual Damage 2. Frequency Tol.<= 5%
E3	Thermal Shock	1 Cycle: - 40°C (30 minutes) to + 80°C (30 minutes) Cycles: 24	After 2 Hours Recovery 1. No Visual Damage 2. Frequency Tol.<= 5%
E4	Life (High Temp.)	MIL-STD-202G, 108A, cond. A Temp: 80°C; Time: 48hours	After 2 Hours Recovery 1. No Visual Damage 2. Frequency Tol.<= 5%
R1	RoHS	With Reference to IEC 62321:2008 with flow chart	Directive RoHS 2015/863(EU)

江阴希格诺通信科技有限公司

JiangYin XiGeNuo Communication Technology CO.,LID.

产品规格书Product Specification			
型号 Type	RF-1.13（双锡）	料号 P/N	XGN113/50-2001
结构图 Structure drawing			

结构特性 Structure characteristics		
结构 Structure	项目 Item	标准值 Standard value
1.内导体 Inner conductor	材料 Material	镀锡铜线 Tinned copper
	组成:总根数/单根外径(mm) Makeup:total / O.D. of every	7/0.08(±0.005)
	(绞合)标称外径(mm) (Intertwist)NOM.O.D.(mm)	0.24±0.01
2.绝缘层 Insulation	材料 Material	聚全氟乙丙烯 FEP
	颜色 Color	Natural
	标称外径Dia.(approx)	0.7±0.03
3.外导体 Outer conductor	材料 Material	镀锡铜线 Tinned copper
	形式/Type	编织/Weaving
	组成:总根数/单根外径(mm) Makeup:total / O.D. of every wire(mm)	16/4/0.05±0.005
	标称外径Dia.(approx)	0.92±0.03
	覆盖率(%)Coverage ratio(%)	90% ±5
4.护套层 Jacket	材料 Material	聚全氟乙丙烯FEP
	颜色 Color	黑 Black
	标称外径Dia.(approx)	1.13±0.05
同心度（绝缘层和内导体） Concentricity（Inner conductor and Insulation）		≥90%

电性能特性 Electrical characteristics	
特征阻抗Characteristic impedance (Ω)	50±2.0
电压驻波比Standing wave ratio	≤1.4@0~8GHz
最大工作频率Max.operating frequency(MHz)	8000
耐电压 Dielectric strength between inner and outer conductor	AC 1000V for 1min
电容Capacitance(pF/m)	98
抗拉强度/Tensile strength(kgf/mm^2)	1.76

频率 Frequency	标准值 Standard value(dB/1m)
1GHz	≤2.23
2GHz	≤3.15
3GHz	≤3.96
4GHz	≤4.6
5GHz	≤5.15
6GHz	≤5.7
7GHz	≤6.42
8GHz	≤7.05

可靠性 Dependability

项目 Item	标准值 Standard value
最小折弯半径 Min.bending radius static （mm）	4
工作温度范围Operating temperature （℃）	-55~+200
存储环境Storage environment	温度：30℃以下：湿度：20%~65%
最佳保存周期The best save cycle	6个月，6个月以上锡效果变差,请做上锡测试在生产，但电性能不受影响，夏季高温高湿环境开剥后需尽快流转
铁氟龙收缩Teflon Shrink	绝缘层：≤0.2mm；护套层：≤0.3mm

包 装 Packing

标准单位包装长度为1000 米/盘,每盘最多允许4 个接头,接头最短长度10 米,在搬运过程中不能损坏包装。
Standard unit for the 1000m/reel length of packaging, each set up to allow 5 joints,the joint shortest length of 10m,The finished cable shall be packed not be damaged during transportation。

其他 Other

特殊加工工艺，请与供方协商后使用。
Special processing technology, please use after consultation with the supplier。

E5071C Network Analyzer
1 Active Ch/Trace 2 Response 3 Stimulus 4 Mkr/Analysis 5 Instr State
Tr3 S11 SWR 1.000/ Ref 1.000 [F2]
>1 2.4000000 GHz 1.8157
2 2.4500000 GHz 1.2885
3 2.5000000 GHz 1.1701
11.00
10.00
9.000
8.000
7.000
6.000
5.000
4.000
3.000
2.000
1.000
1 Start 2 GHz
IFBW 70 kHz
Stop 3 GHz
System
Print
Abort Printing
Printer Setup...
Invert Image
ON
Dump
Screen Image...
Multiport Test Set
Setup
Misc Setup
Backlight
ON
Firmware
Revision
Service Menu
Help
Return
Meas
Stop
ExtRef
Svc
2023-11-09 18:36

2D Radiation Pattern

2G

XY

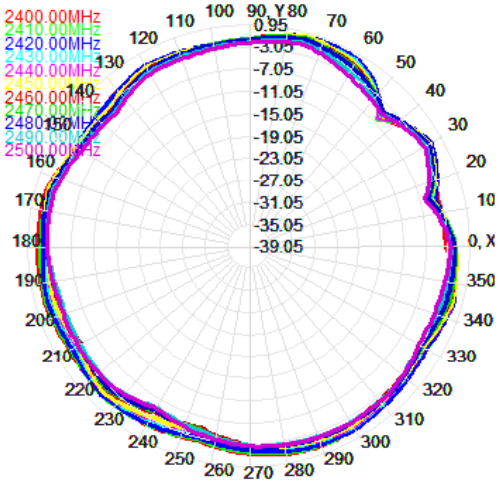

XZ

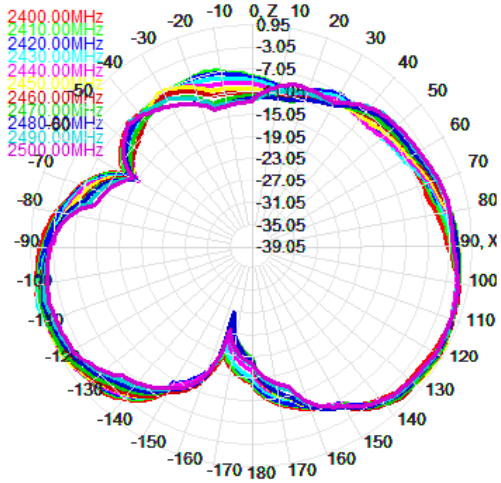

YZ

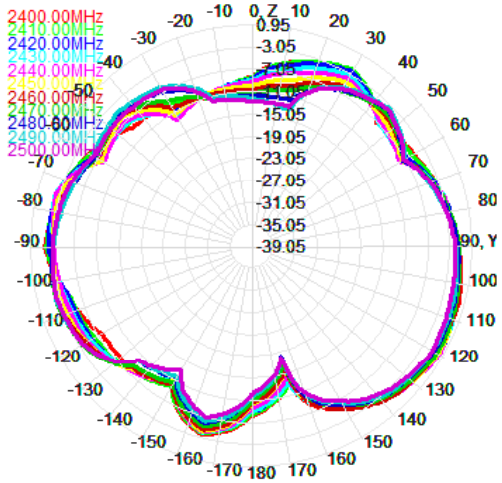

3D Radiation Pattern

2G

Front View

Back View

2400 MHz

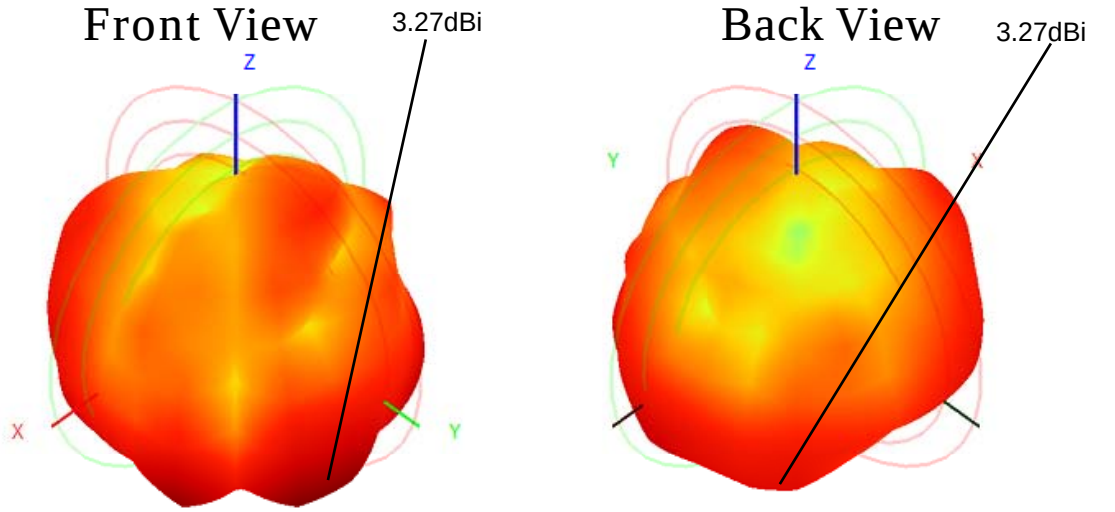

2500 MHz

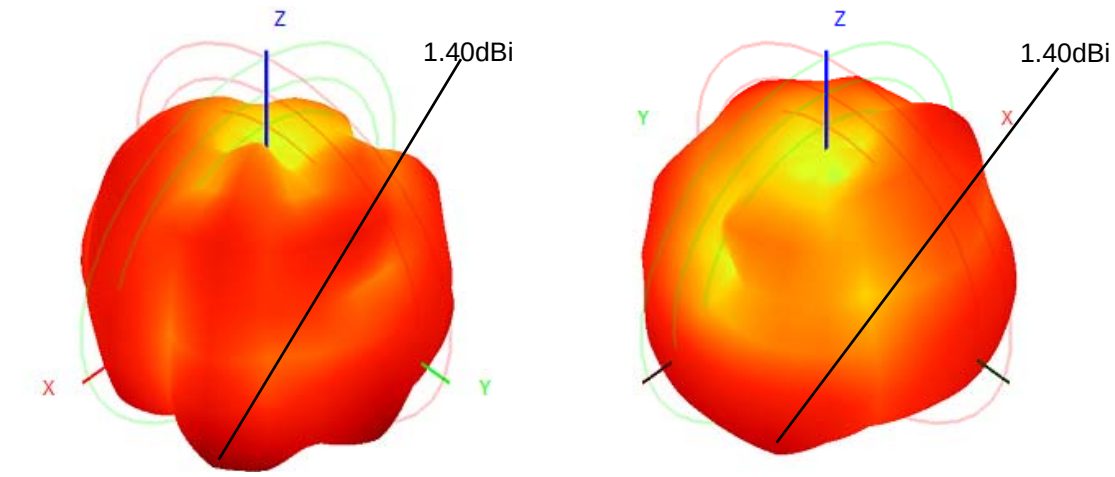

Results Summary

VSWR

Frequency (MHz)	2G
2400	1.8
2450	1.2
2500	1.1

Results Summary

2G Antennas

Frequency (MHz)	Peak gain(dBi)	Efficiency (%)
2400	3.27	48.54
2410	3.02	48.46
2420	2.84	47.58
2430	2.86	45.75
2440	2.88	44.86
2450	2.93	44.71
2460	2.61	43.39
2470	2.40	42.42
2480	2.06	39.98
2490	1.75	38.13
2500	1.40	36.13

RoHS Compatible

CUSTOMER	
PART NO	

REV.	DESCRIPTION	DATE
A	Initial release	2024-01-22

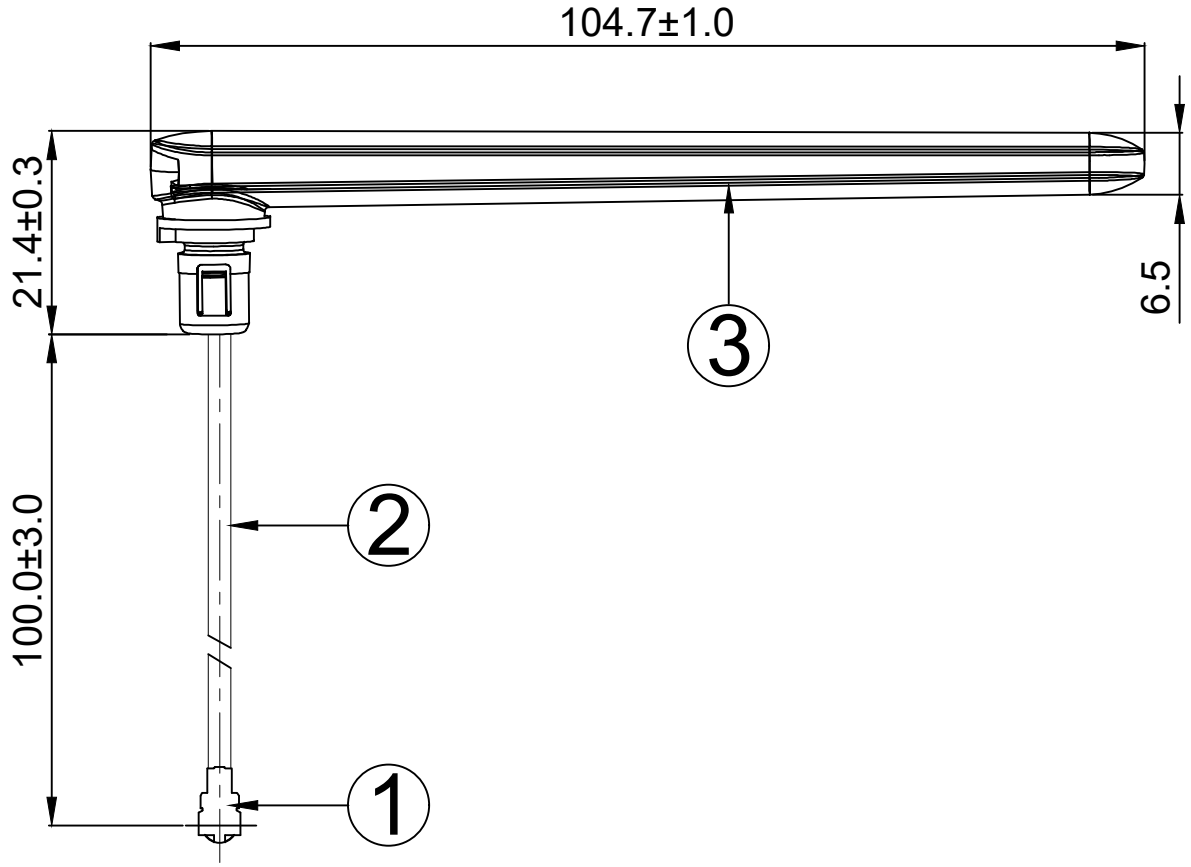

NO	PART NAME	DESCRIPTION	Material	Part Number	Q.TY
3	2.4G Antenna	104.7*21.4*6.5MM White			1
2	Coaxial Cable	O.D. 1.13 MM Black	O.D. 1.13		1
1	Mini Connector	Au Plated 1代	Cu		1

Dongguan Zhongchi Electronic Technology Co.,Ltd Tel 0769-81238620 Fax:0769-81238620

PART NAME: 2.4G Antenna L=100.0mm

PART NO.:ZCA2400-017W100-00X

DATE: 2024-01-22

APPROVED BY	CHECKED BY	DESIGNED BY		Tolerance
		Huang Wang Chun	UNITS: mm SCALE: 1/1 REVISION: A	X.X ±0.50 X.XX±0.15 X° ±3°