USER MANUAL

CAR STEREO MULTIMEDIA SYSTEM

CAR STEREO

Wishing you a pleasant journey

Model NO.:CH7201A

⚠WARNING:

Please be sure to read this manual before installing and using the product to help you better and more quickly understand this product.

CATALOG

Precautions before using the system ———— 01-02

Install the player ———— 03-04

Schematic diagram of machine wiring ———— 05-11

Main page function introduction and operation ———— 12-14

Setup menu function introduction and operation ———— 15-18

Phone link function introduction and operation ———— 19-22

Radio function introduction and operation ———— 23-24

Bluetooth function introduction and operation ———— 25-27

USB / TF card function introduction and operation ———— 28-31

DAB function introduction and operation ———— 31

AUX in function introduction ———— 32

Thank you very much for purchasing our products!

1.Please thoroughly read this instruction manual before operating the device and store it in a safe place for future reference

★Warning

1.Accidents can happen if you operate or look at the screen while driving. Always make sure to pull over in a safe location before manipulating the device.

2. If the machine is not functioning properly (e.g., no image displayed, no sound), or if you notice anything unusual (such as foreign objects, water damage, smoke, or unusual odors), please stop using it immediately. Continuing to use the machine in these conditions could lead to accidents, fires, or electric shocks.

3.Be sure to use a fuse with a specified capacity and have it replaced by a professional technician. If a fuse exceeds the specified capacity, it may cause malfunction.

4.Do not take apart, repair, or alter the equipment. Additionally, do not disassemble, repair, modify, or cut the wire insulation to disconnect power from other devices. Doing so could lead to fire, electric shock, or equipment failure.

5.Do not place metal or flammable materials inside the machine, as this can lead to overheating due to a short circuit or inadequate insulation, potentially causing a fire, electric shock, or equipment failure.

6.Keep small accessories like screws out of the reach of babies and young children, and seek medical attention immediately if they are swallowed.

7.Regularly inspect the power cord for damage, ensure that wiring has not come loose due to vibration, and check that the connection points are not in contact with the vehicle body.

8.When using a car navigation app, be aware that the route guidance provided may inadvertently lead to violations of actual traffic laws, potentially causing a traffic accident.

★Disclaimer

1.The Company will not be held responsible for any damage resulting from fire, earthquakes, actions by third parties, other accidents, intentional or accidental misuse by customers, improper use, or any other extraordinary circumstances.

2.The Company shall not be responsible for any consequential damages, such as loss of business profits or alteration/loss of data contents, arising from the use or inability to use this product.

2.Install the player

❶ Please remove car stereos, glove boxes, and other accessories before proceeding.

Take out the radios, accessory boxes, etc., and uninstall the brackets that secure them. Then, use the bracket to install the new unit.

❷ Position the bracket on the machine and secure it in place.

Attach the bracket to the machine, and then use the provided screws to mount the bracket to both ends of the main unit.

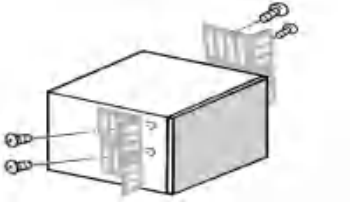

❸ Reinstall it to the central control unit.

Secure the combined main unit to the car's dashboard by locating an appropriate position and fastening it with four screws.

3.Schematic diagram of machine wiring

6 RCA Rear interface description:

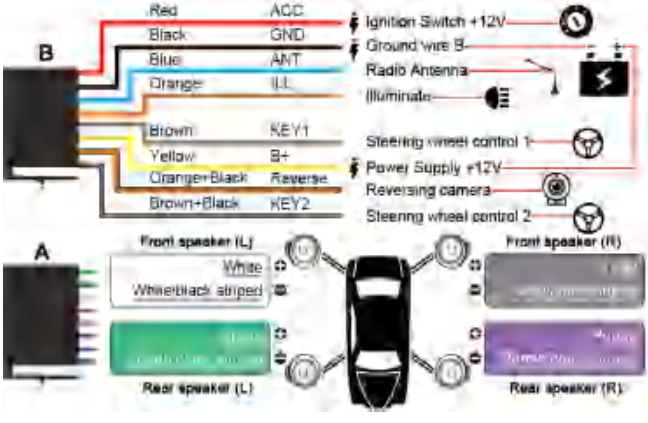

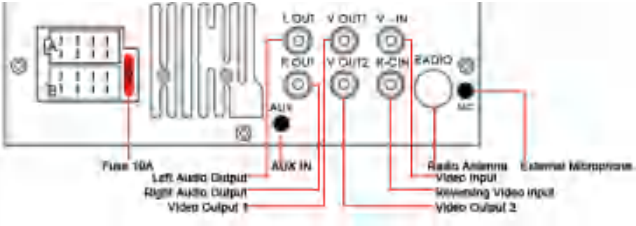

Learning steering wheel controls:

To operate the feature on your car's steering wheel, press and hold the button of interest. Then, identify the matching icon on the steering wheel that corresponds to the button's function. Once you've spotted the icon, give it a click to change its color. Congratulations, you've successfully learned the button's function!

Reversing camera installation method:

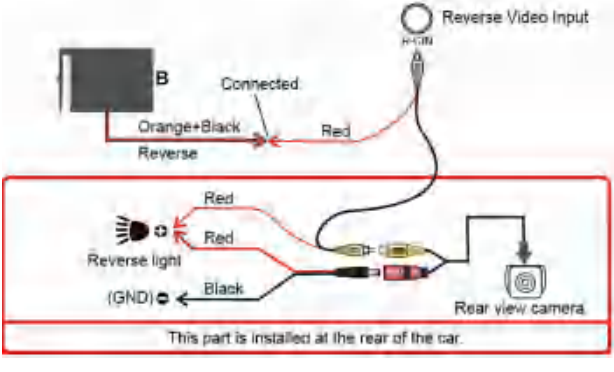

8 RCA Rear interface description:

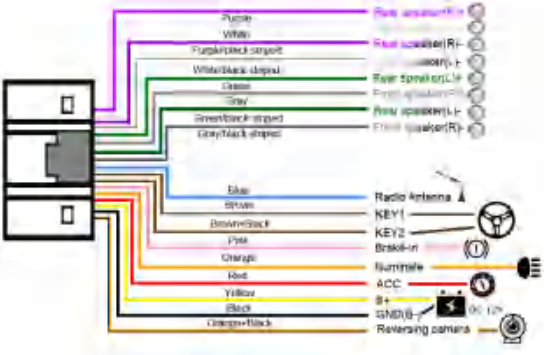

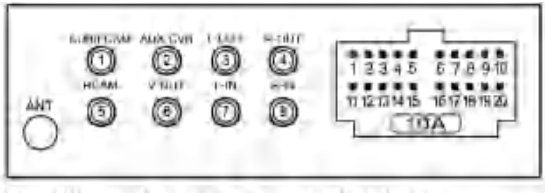

1:SUB/FCAM:Subwoofer input/front-view input
2:AUX-CVB:Video input
3:L-OUT:Left channel audio output
4:R-OUT:Right channel audio output
5:RCAM:Reversing camera input
6:V-OUT:Video output
7:L-IN:Left channel audio input
8:R-IN:Right channel audio input

Learning steering wheel controls:

To operate the feature on your car's steering wheel, press and hold the button of interest. Then, identify the matching icon on the steering wheel that corresponds to the button's function. Once you've spotted the icon, give it a click to change its color. Congratulations, you've successfully learned the button's function!

Reversing camera installation method:

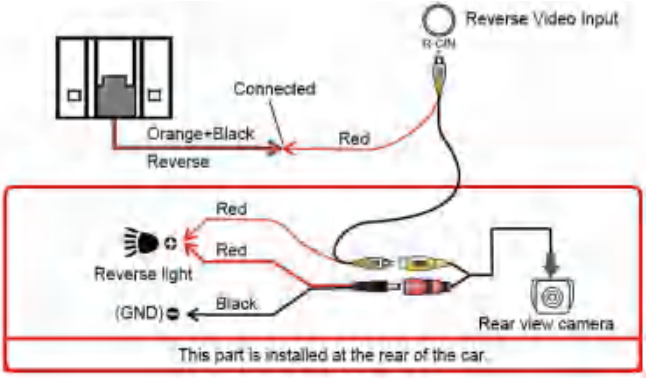

10 RCA Rear interface description:

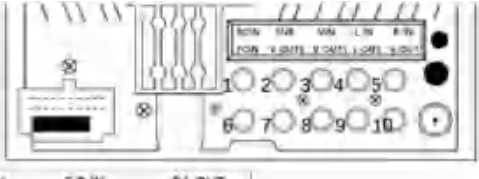

1.RCIN	5.R IN	9.L OUT
2.SUB	6.FCIN	10.R OUT
3.VIN	7.V OUT2	
4.L IN	8.V OUT1	

Learning steering wheel controls:

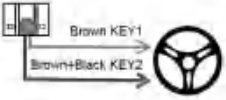

The steering wheel controls the learning interface:

To operate the feature on your car's steering wheel, press and hold the button of interest. Then, identify the matching icon on the steering wheel that corresponds to the button's function. Once you've spotted the icon, give it a click to change its color. Congratulations, you've successfully learned the button's function!

Reversing camera installation method:

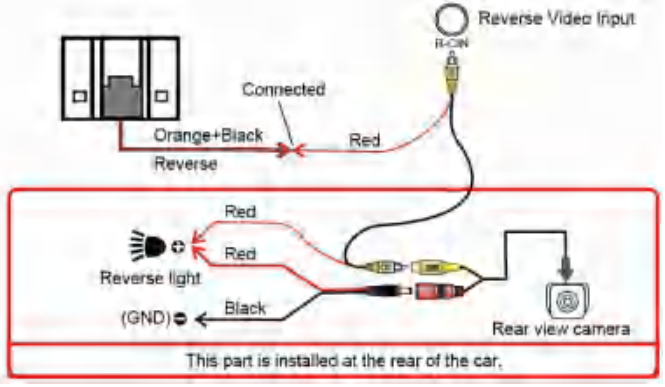

★Note

1.For the power connections, follow these steps: ① The B+ terminal (yellow wire) for the battery or battery power should be permanently connected to the fuse. ② Link the ACC terminal (red wire) to the accessory power supply wiring within the vehicle's power fuse box. ③ The GND or ground connection (black wire) should be attached to the negative terminal of the vehicle's battery.

2.Make sure to connect the ILLUMI/lighting power supply (orange wire) to the vehicle's original ILL lead. Once connected, when the headlights are turned on, the backlight of this device will automatically switch to night mode for a darker illumination.

3. Ensure that the REVERSE/Reverse signal input wire (orange with a black stripe) is connected to one of the following: the positive terminal of the reverse light, the vehicle's reverse signal line, or the reverse trigger wire on the camera cable.

4.The parking brake/brake wire (pink) typically doesn't need to be connected. However, in certain regions where it's against the law to drive without engaging the parking brake, please link the parking brake detection line to the brake pedal and utilize this feature.

5. For the steering control connection:

(Brown) and (Brown/Black) wires: First, connect the light black wire to the ground, then attach the key wire to the original steering wheel harness. Please verify the software settings of your vehicle.

If your vehicle has only one SW connection: You can link the SW to either KEY1 or KEY2 on the steering control cable.

If your vehicle has two SW connections: Connect KEY1 to one end and KEY2 to the other end of the steering control cable.

6.Memory Function: As the B+ is continuously connected to the fuse, the memory function operates as expected. When you turn on the car stereo, it will automatically display the function interface that was active before the last shutdown.

4. Main page function introduction and operation

1.Display the current time & Date

Touch to switch clock format / digital format display

2.Volume display

Touch the icon to enter into to adjust the volume

3.Radio mode icon

Touch the radio mode icon to enter into the radio interface for operation

4.Time display

Display the current system time

5.Backlight mode icon

Touch the backlight mode icon to switch between day / night and turn off the backlight mode

6.DAB mode icon

Touch the DAB mode icon to enter into the DAB+ interface for operation

7.Display device connection status

Display the connection status of Bluetooth and USB. When it is connected, highlight the corresponding icon. When not connected, the corresponding icon is not displayed

8.USB mode icon

Touch the USB mode icon to enter into the USB interface for operation

9.Home key

Touch this key to return to the main interface

10.Bluetooth icon

Touch the Bluetooth mode icon to enter into the Bluetooth interface for operation

11.Car play mode icon

Touch the mode icon to enter into the CARPLAY for operation

12.Android Auto mode icon

Touch the mode icon to enter into the Android Auto for operation

13.Set mode icon

Touch the setting mode icon to enter into the setting mode for operation

14.RCAM mode icon

Tap the RCAM mode icon to enter into the rear view camera mode

15.DSP mode icon

Touch the DSP mode icon to enter into the DSP interface for operation

16.Auto link mode icon

Touch the mode icon to enter into the Android mirror link for operation

17.iOS mirror mode icon

Touch the mode icon to enter into the iOS mirror link for operation

18. AUX mode icon

Tap the AUX mode icon to enter into the AUX interface operation

19. Wallpaper set

Tap the wallpaper icon to enter into the wallpaper interface operation

5.Setup menu function introduction and operation

1. Touch this key to enter into the function setting interface; The function setting interface can slide up and down.

Language	You can change the language settings of the native system
Carplay(WIFI)	Enable or disable wireless CarPlay
AndroidAuto(WIFI)	Enable or disable wireless CarPlay Android Auto
CP&AA Menu On Right	The user interface is positioned on the right or the left
Brake Detection	To watch a video while driving, make sure to turn it off
Beep	You have the option to toggle the operation sound on or off
Key Lights	“ILUMI” is mounted to the headlight, and you can customize the color of the unit's backlight
Headlight detection	When you enable light control, the screen brightness will automatically adjust to match the surrounding ambient light
Reversing Mirror	Adjust the mirror setting for the reverse image
Reverse guide	Enable or disable the reverse trajectory line

R.Reversing Mirror	Adjust the mirror setting for the rear reverse image
Panel	Screen settings
Radio Area	To obtain the correct radio frequency, switch to the appropriate region setting
Logo	If you wish to change the logo, please reach out to the after-sales service team
About	You can check the machine's version information
Default	Initialize the native system settings to perform the setup operation.

2. Tap this button to access the audio settings menu.

Adjust the volume for the right front, front left, rear right, rear left speakers, and the subwoofer. Before making any adjustments, press "DSPOFF" in the center to activate and enable the "DSP" feature.

3. Tap this button to access the display settings menu.

On this settings screen, you can adjust the screen's aspect ratio, brightness, contrast, hue, and saturation.

4. Press this button to access the time settings menu.

5. Tap this button to go to the wallpaper settings.

6. Press this button to enter the square control settings.

6.Phone link function introduction and operation

(1).Android Auto:

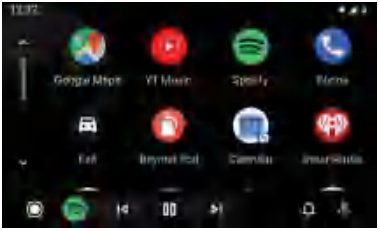

By connecting your Android Auto-compatible smartphone to the device and using Android Auto, you can interact with the unit's screen by touching, swiping, and dragging. You can view and control smartphone apps directly on the device, or you can use voice commands to operate it. Keep in mind that to play your smartphone's audio through your car's stereo system, you'll need to pair it with the product's Bluetooth.

Wired connection: Connect the device using a cable and launch the Android Auto app.

Note: If there's no response after connecting, please power off both the car stereo and your mobile phone, and then try connecting again. If the issue persists, attempt using a different cable.

Wireless connection:

(1) Open Settings → AndroidAuto (WIFI) settings.

(2) Once the phone approves the Bluetooth connection, it will enter Android Auto after a brief wait..

Note: Make sure to enable your phone's WiFi settings. If the previous step doesn't work, please turn off both the car stereo and your mobile phone, then turn on Bluetooth. Clear the connection history and attempt to connect again. If you wish to use Bluetooth exclusively, disable the Android Auto (WiFi) setting in your phone's Settings.

(2).Car play:

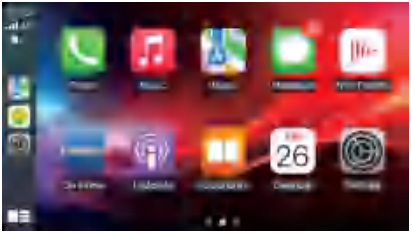

By connecting your Carplay-compatible smartphone to the device and using Carplay, you can interact with the unit's screen by touching, swiping, and dragging. You can view and control smartphone apps directly on the device, or you can use voice commands to operate it. Keep in mind that to play your smartphone's audio through your car's stereo system, you'll need to pair it with the product's Bluetooth.

Wired connection: Connect the device using a cable and launch the Carplay.

Note: If there's no response after connecting, please power off both the car stereo and your mobile phone, and then try connecting again. If the issue persists, attempt using a different cable.

Wireless connection:

(1) Open Settings → Carplay (WIFI) settings.

(3) Once the phone approves the Bluetooth connection, it will enter Carplay after a brief wait..

Note: Make sure to enable your phone's WiFi settings. If the previous step doesn't work, please turn off both the car stereo and your mobile phone, then turn on Bluetooth. Clear the connection history and attempt to connect again. If you wish to use Bluetooth exclusively, disable the Carplay (WiFi) setting in your phone's Settings.

(3).Auto link:

To utilize the MirrorLink feature, you'll need to install the "Autolink Pro" app. You can download "Autolink Pro" by scanning the QR code provided below.

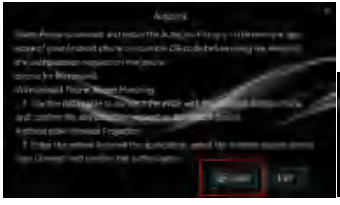

Wired connection: Connect the device using a cable and launch the Mirrorlink.

Note: If there's no response after connecting, please power off both the car stereo and your mobile phone, and then try connecting again. If the issue persists, attempt using a different cable.

Wireless connection:

(1) Launch the Autolink Pro application on your smartphone.

(2) Please search for the product's WiFi name in the "Available Devices" list.

(3) Next, tap on it, and a connection prompt will appear. When you receive the prompt to allow the connection, go ahead and initiate the connection.

(4).Airplay:

Wireless connection:

(1) Please use your iPhone to search for the device's WiFi network named 'DIRECT-phonelink-xxx' and connect to it. The password is 88888888.

(2) Choose “Car-AirPlay” as your screen mirroring option from your iPhone’s settings.

Note: Make sure your phone's WiFi is enabled. If the previous steps are not working, please turn off both the car stereo and your mobile phone, then turn on Bluetooth. Also, delete the connection history and attempt to connect again.

7.Radio function introduction and operation

1.Shows the current station frequency.

2.Go back to the previous page:Tap this button to go back to the previous page.

3.DSP Mode Icon:Tap the DSP mode icon to access the DSP settings for configuration.

4.Frequency Entry Keyboard:Use the keyboard to input the desired frequency.

5.Station Memory: The FM band can store up to 18 stations, while the AM band can store up to 12 radio stations.

6.Press this button to toggle between FM, AM, and back to FM.

7.Press this button to scroll through saved radio stations. For a station search, press and hold this button for 1 second to scan for stations from the lowest to the highest frequency. The found stations will be saved to the search list in sequence, and the list will be updated accordingly.

8.Press this button to toggle between remote and short-range modes.

9.Press this button to switch between stereo and mono audio.

10.Press this button to move the frequency backward; hold for 1 second to search backward. The search will automatically stop after finding a valid radio station.

11.Press this button to advance the frequency step by step; hold for 1 second to search forward, and the search will automatically stop when a valid radio station is found.

8.Bluetooth function introduction and operation

1.Device name 2.PIN Code 3.Bluetooth connection device interface

● When connected via Bluetooth, you can make calls through the unit, play music stored on your smartphone, and more. Pairing is initiated during the first connection to the unit.

● Select "Bluetooth" from the main menu to access the Bluetooth connection screen.

● Tap the search icon on the unit to scan for your smartphone. Ensure your device is discoverable by following the instructions in its user manual.

● Alternatively, open the Bluetooth settings on your smartphone and look for the device model name.

● Tap the name of the smartphone you wish to connect, then enter the PIN code "0000" on your smartphone to establish the connection.

Note: Please keep the distance between your mobile phone and this product to no more than 5 meters. Pairing settings are only required for the initial connection. Subsequently, simply turn on Bluetooth for the device to connect automatically. Please be aware that connection may not be achievable due to variations in Bluetooth versions and compatibility issues.

Note: If you haven't synchronized your phonebook, the "Phonebook" or "History" options won't be shown. You can sync your phonebook through the settings menu. Please note that depending on your phone's model and character encoding, some entries in the Phonebook or History may appear distorted or not show up at all.

1.Dialpad

2.Mobile phone call interface

3.Call history interface

4.Phone contacts interface

5.Bluetooth music playback interface on mobile phones

6.The Bluetooth connection device is cut off or the connection interface

7.Turn the microphone sound off or on

8.Hang up or answer the call

9.Switching between mobile phone calls and machine device calls

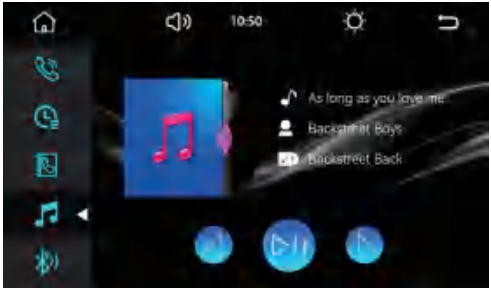

Note: All music files and apps are playable. However, function keys may not operate in certain applications. Audio playback may be interrupted by incoming calls or other interruptions. The volume of Bluetooth music is influenced by both the car stereo and the smartphone settings. If you're not hearing any sound, it's possible that the volume is set to 0 on either the car stereo or the smartphone.

9.USB / SD card function introduction and operation

(1).Introduction and operation of music playing function

Introduction to music playing function:

SupportMP3\WMA\AAC\WAVE\FLAC\APE\OGG\M4A(QT)\RA

1.1 Touch this key to enter into the audio setting interface

1.2 Touch this key to switch the single cycle / folder cycle / all cycle functions

1.3 Touch this key to switch to the previous song

1.4 Touch this key to open the random play function

1.5 Touch this key to switch the pause / play function

1.6 Touch this key to turn on / off the function of digital music selection keyboard

1.7 Touch this key to switch to the next song

1.8 Touch this key to turn on / off the song list function

1.9 Touch this key to enter / exit the file list interface

(2). Introduction and operation of video playback function

Introduction to video playback function:

Support DIVX\AVI\MKV\QT\MPG\ASF\FLV\RMVB\TS

2.1 Touch this key to switch to the previous song

2.2. Touch this key to switch the pause / play function

2.3. Touch this key to switch to the next song

2.4. Touch this key to switch the single cycle/ folder cycle / all cycle functions

2.5. Touch this key to open the random play function

2.6. Touch this key to the video amplification function

2.7. Touch this key to switch to the next page OSD

2.8. Touch this key to enter into the audio setting interface

2.9. Touch this key to enter into the display setting interface

2.10. Touch this key to turn on / off the function of digital music selection keyboard

2.11. Touch this key to turn on / off the song list function

2.12. Touch this key to switch to the previous OSD

(3). Introduction and operation of picture playback function

Introduction to picture playback function:

Support JPG\BMP\PNG

3.1. Touch this key to switch to the previous picture playback

3.2. Touch this key to switch the pause / play function

3.3. Touch this key to switch to the next picture play

3.4. Touch this key to turn on / off the function of digital music selection keyboard

3.5. Touch this key to switch to the next page OSD

3.6. Touch this key to enlarge the picture

3.7. Touch this key to the picture rotation function

3.8. Touch this key to switch the single cycle / folder cycle/ all cycle functions

3.9. Touch this key to open the random play function

3.10. Touch this key to switch to OSD on the previous page

10.DAB function introduction and operation (optional)

1. The radio interface that is being played;
2. List of programs;
3. Previous show;
4. Search for a station;
5. Next show;
6. Program type code.

11.AUX in function introduction

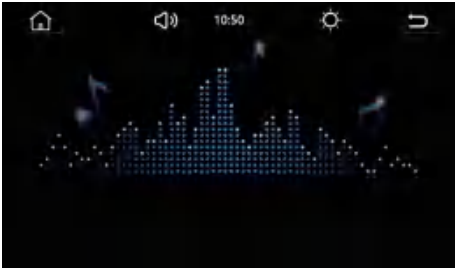

Video Input: The video input is connected to the video device using the AV input jack on the rear of the unit. Select "External Input/Output" to view the input video. A dedicated RCA cable is needed to connect the video device.

Video Output: You can project the current screen onto an external monitor.

12.FCC Caution:

Any changes or modifications not expressly approved by the party responsible for compliance could void the user's authority to operate this equipment.

This device complies with part 15 of the FCC Rules. Operation is subject to the following two conditions:

(1) this device may not cause harmful interference, and

(2) this device must accept any interference received, including interference that may cause undesired operation.

This device and its antenna(s) must not be co-located or operating in conjunction with any other antenna or transmitter.

NOTE: This equipment has been tested and found to comply with the limits for a Class B digital device, pursuant to Part 15 of the FCC Rules. These limits are designed to provide reasonable protection against harmful interference in a residential installation. This equipment generates, uses and can radiate radio frequency energy and, if not installed and used in accordance with the instructions, may cause harmful interference to radio communications. However, there is no guarantee that interference will not occur in a particular installation. If this equipment does cause harmful interference to radio or television reception,

which can be determined by turning the equipment off and on, the user is encouraged to try to correct the interference by one or more of the following measures:

-- Reorient or relocate the receiving antenna.

-- Increase the separation between the equipment and receiver.

-- Connect the equipment into an outlet on a circuit different from that to which the receiver is connected.

-- Consult the dealer or an experienced radio/TV technician for help.

To maintain compliance with FCC's RF Exposure guidelines, This equipment should be installed and operated with minimum distance between 20cm the radiator your body: Use only the supplied antenna.

Thank you for using our product.
Should you have any questions during the installation or usage process, feel free to contact us at any time.
We will assist you in resolving the issues until you are fully satisfied.