Bettear CASTER | User Manual

B Battear CASTER – Auracast Audio Streamer

www.bettear.com

Firmware Version: 1.0.2

Highlights:

- Low-Latency Audio Streaming (<40ms)
- Secure Streaming
- Audio Optimization (AGC, LPF, HPF)
- Intuitive Management Dashboard
- Power and Audio Cascading
- Full Support for Auracast™ Enabled Devices
- Extended Wide-Area Coverage

TABLE OF CONTENTS

OVERVIEW **3**

SAFETY PRECAUTIONS **3**

HEARING SAFETY 3
MEDICAL DEVICE SAFETY 3
WARNING 3

INTRODUCING THE B-CASTER **4**

FRONT PANEL – INDICATION LED 4
REAR PANEL - CONNECTORS 4

QUICK START **5**

MANAGEMENT PANEL **5**

ACCESSING THE B-CASTER MANAGEMENT PANEL 5
Direct Connection to a Laptop *5*
Connection Over Network *5*
EXPLORING THE B-CASTER MANAGEMENT PANEL 6
Summary Section *6*
Broadcast Settings *6*
Audio Settings *7*
Transmission Power *7*
Network Configuration *7*
LED Indicators *8*
Save Changes *8*

CONNECTION TOPOLOGY **9**

CASCADING **10**

POE CASCADING 10
CONTROL AND AUDIO CASCADING 10

FACTORY RESET **10**

SPECIFICATIONS **11**

PHYSICAL **12**

MOUNTING **12**

ACCESSORIES **12**

WARRANTY **13**

PRIVACY POLICY **13**

SUPPORT **13**

OVERVIEW

The B-CASTER is a powerful Auracast™ streamer designed to seamlessly sample and broadcast audio across various environments. It is ideal for both **assistive listening** and **real-time Hi-Fi audio streaming**.

The device is easy to install and integrate into different setups, ensuring a high-quality listening experience for all. Additionally, the B-CASTER also features a built-in, user-friendly web management panel for quick and simple configuration over an ethernet connection.

Theaters | Sports Arena | Cinemas | Classrooms

Meeting Rooms | Airports | Law Courts

SAFETY PRECAUTIONS

HEARING SAFETY

This product is designed to amplify audio to a high-volume level which could potentially cause hearing damage if used improperly. To protect your hearing make sure the volume is turned down before putting on the headset, then adjust the volume up to the minimum setting required to hear clearly. Do not allow children or other unauthorized individuals to have access to this product without supervision.

*This device is equipped with Automatic Gain Control AGC to prevent the sensation of intense noise bursts.

MEDICAL DEVICE SAFETY

Before using the B-CASTER streamer with an implantable or other medical device, consult your physician or implant manufacturer or other medical device manufacturer. Always make sure you are using this product in accordance with the safety guidelines established by your physician or the implantable device manufacturer.

WARNING

- This device complies with part 15 of the FCC Rules. Operation is subject to the following two conditions:(1) This device may not cause harmful interference, and (2) this device must accept any interference received, including interference that may cause undesired operation.

- Any Changes or modifications not expressly approved by the party responsible for compliance could void the user's authority to operate the equipment.

- Note: This equipment has been tested and found to comply with the limits for a Class B digital device, pursuant to part 15 of the FCC Rules. These limits are designed to provide reasonable protection against harmful interference in a residential installation. This equipment generates uses and can radiate radio frequency energy and, if not installed and used in accordance with the instructions, may cause harmful interference to radio communications. However, there is no guarantee that interference will not occur in a particular installation. If this equipment does cause harmful interference to radio or television reception, which can be determined by turning the equipment off and on, the user is encouraged to try to correct the interference by one or more of the following measures:
  - Reorient or relocate the receiving antenna.
  - Increase the separation between the equipment and receiver.
  - Connect the equipment into an outlet on a circuit different from that to which the receiver is connected.
  - Consult the dealer or an experienced radio/TV technician for help.

- This equipment complies with FCC radiation exposure limits set forth for an uncontrolled environment. This equipment should be installed and operated with minimum distance 20cm between the radiator & your body.

- Always observe standard safety precautions during installation, operation, and maintenance of this product. Only qualified and authorized service personnel should carry out adjustment, maintenance, or repairs to this product. No installation, adjustment, maintenance, or repairs should be performed by either the operator or the user.

  Respectez toujours les standards de sécurité durant l'installation, l'opération et la maintenance de ce produit. Seul le personnel de service qualifié et autorisé devrait effectuer l'ajustage, la maintenance ou les réparations de ce produit. Aucune opération d'installation, d'ajustage, de maintenance ou de réparation ne devrait être effectuée par un opérateur ou l'utilisateur.

- This device contains license-exempt transmitter(s)/receiver(s) that comply with Innovation. Science and Economic Development Canada's license-exempt RSS(s). Operation is subject to the following two conditions:
  (1) This device may not cause interference.
  (2) This device must accept any interference, including interference that may cause undesired operation of the device.

  Le present appareil est conforme aux CNR d'Industrie Canada applicables aux appareils radioexempts de licence. L'exploitation est autorisee aux deux conditions suivantes:(1) l'appareil ne doit pas produire de brouillage, et(2) l'utilisateur de l'appareil doit accepter tout brouillage radioelectrique subi, meme si lebrouillage est susceptible d'en compromettre le fonctionnement.

INTRODUCING THE B-CASTER

FRONT PANEL – INDICATION LED

1. Power Indicator
2. Audio Broadcasting Indicator
3. LAN 1 Connectivity Indicator
4. LAN 2 Connectivity Indicator

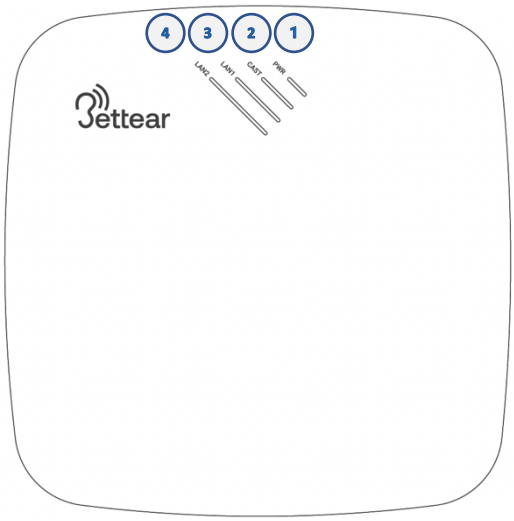

Note: LAN 1 and LAN 2 indicators can also operate as audio presence indicators, switchable via the B-CASTER management panel.

REAR PANEL - CONNECTORS

1. Power Input 12VDC, 2.5A
2. IN1 and IN 2: Balanced Analog Audio Inputs (Terminal Block Jack)
3. Reset Button
4. LAN 2 (PoE Out)
5. LAN 1 (PoE In)
6. Mounting Hole (3/8" Internal Thread)

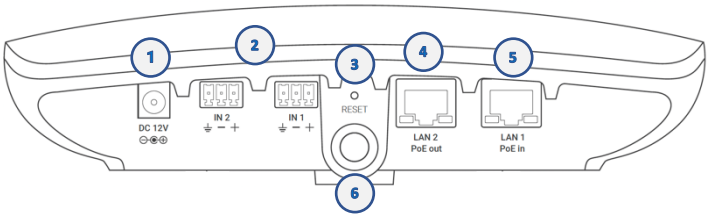

QUICK START

1. **Connect to Audio** – Connect **IN 1** and **IN 2** to an audio source.
   For the best audio quality, it is highly recommended to use balanced audio inputs.

2. **Connect to Power** – Use a 12VDC (⊖-⊂-⊕) power supply, or a Power Over Ethernet (PoE) source.

3. **Pair, Listen, Enjoy** – Use an Auracast™-compatible device to search and connect to the 'B-CASTER' stream.

Note: For advanced configurations, access the **B-CASTER management panel.**
Refer to the **MANAGEMENT PANEL** on page 5 for more details.

MANAGEMENT PANEL

The B-CASTER can be easily managed and optimized for best performance across various use cases.
Access the device's management panel to configure and control advanced settings, such as transmission power, broadcast name, security, audio quality, processing and more.

ACCESSING THE B-CASTER MANAGEMENT PANEL

Direct Connection to a Laptop

In **stand-alone mode**, you can seamlessly access the B-CASTER management panel by directly connecting your laptop to the B-CASTER.

Steps:

1. Connect an Ethernet cable from your laptop to the **LAN 1** port of the B-CASTER.
2. Configure your laptop's network settings:
   a. Open 'Network Settings' and set the Ethernet adapter to **static IP mode**.
   b. Assign the static IP: **192.0.2.10**
   c. Set subnet Mask to **255.255.255.0**.
3. Open a web browser (Google Chrome, Safari, etc.,).
4. Enter the B-CASTER's default IP address in the address bar: **192.0.2.1**, then press **Enter**.
5. You can now access the B-CASTER management panel.

Connection Over Network

The B-CASTER can be integrated into an existing third-party network.
To access the management panel in this setup:

1. Connect an Ethernet cable from the **LAN 1** port of the B-CASTER to the local network switch.
2. Connect a laptop to the network via Wi-Fi or wired connection.
3. Use an IP Scanner to find the B-CASTER's IP address.
   Optional scanners: Windows - Advanced IP Scanner | macOS - LanScan
4. Identify the B-CASTER by searching 'Bettear – Accessibility Technologies Development' under the 'Manufacturer' / 'Vendor' section.
5. Open a web browser (Google Chrome, Safari, etc.,).
6. Enter the B-CASTER's IP address in the address bar and press Enter.
7. You can now access the B-CASTER management panel.

EXPLORING THE B-CASTER MANAGEMENT PANEL

Advanced features and settings can be accessed and configured through the B-CASTER management panel.

Summary Section

This section provides key information about the device, including:

- Device model
- Current firmware version
- Serial number
- Installed license
- MAC address
- Self-assigned local IP address

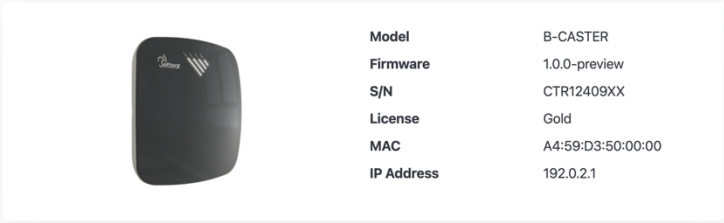

Broadcast Settings

This section allows to configure and control the audio broadcast settings.

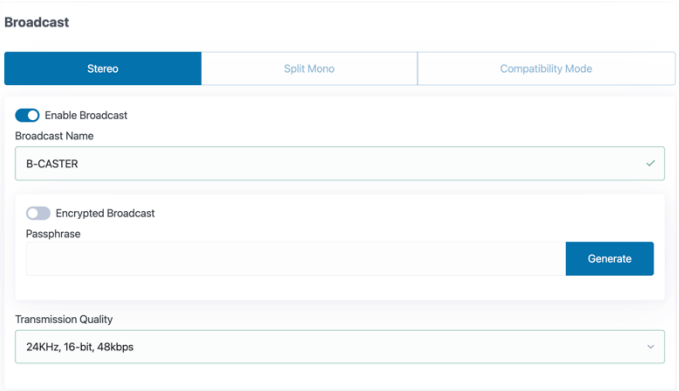

Broadcast Mode Selection

Select the desired broadcast mode:

Stereo:

Streams **IN 1** and **IN 2** inputs as a single **stereo channel**.

Mix Mono:

Mixes **IN 1** and **IN 2** and streams them as a **mono channel**.

Note: Use the **IN 1** and **IN 2** gains and mute buttons in the **Audio** section to adjust the broadcast mix.

Compatibility Mode*:

When **Compatibility Mode** is enabled, the B-CASTER broadcasts, both 48KHz and 24KHz streams simultaneously, ensuring support for both high-quality audio and assistive listening modes.

Enabling/Disabling Broadcast

Toggle this switch to enable or disable the broadcast advertisement. Disabling the broadcast prevents users from accessing the stream.

Broadcast Name

Customize the broadcast name that will be advertised and displayed to listeners.

Encryption

Configure the broadcast as open or encrypted depending on the installation requirements.
If **Encrypted Broadcast** is enabled, enter a passkey (up to 16 digits) to access the stream.

Transmission Quality

Select the transmission quality that best suits the installation requirements.

Transmission Quality	Details	Hearing Aid Support
Low quality	16KHz, 16-bit, 32kbps	Yes
Mid quality	24KHz, 16-bit, 48kbps	Yes
High quality	48KHz, 16-bit, 96kbps	No

Audio Settings

This section allows fine-tuning and adjusting of the input audio.

AGC (Automatic Gain Control)

Enable or disable **AGC** functionality.

Link Channels

Enable or disable **Link Channels** to adjust the **IN 1** and **IN 2** input gains simultaneously or independently.

Input Gains

Adjust **IN 1** and **IN 2** gain sliders to optimize the input signal level and balance the input levels when operating in **Mix Mono** mode. Mute or unmute each input as needed.

Audio Processing

Apply low-pass and high-pass filters to optimize the audio.

HPF

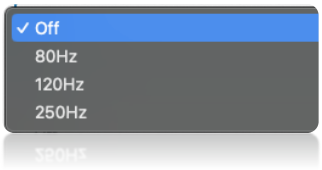

LPF

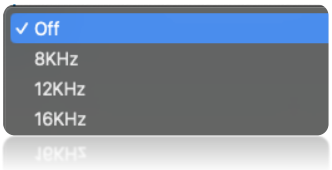

Transmission Power

Adjust the transmission Power using the **TX Power** slider.

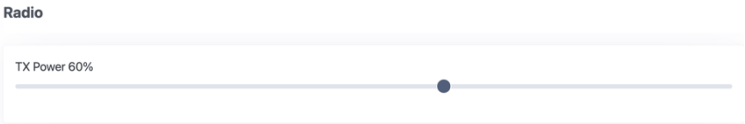

Note: the maximum transmission power may vary depending on regional regulations.

Network Configuration

This section allows configuring the device's self-assigned IP and network settings.

DHCP Mode

When enabled, the device operates as a client, automatically obtaining an IP address from a DHCP server on the same network, which manage IP assignment.

If no DHCP server is detected, the B-CASTER defaults to its predefined IP configuration, allowing access in **stand-alone** mode.

Default IP address (if no DHCP server is available):

IP Address	Subnet Mask	Gateway
192.0.2.1	255.255.255.0	0.0.0.0

Static IP Mode

Select **Static IP** mode to manually configure the device's IP and network settings.

This mode is useful when managing multiple B-CASTER devices on the same network, as each device must have a unique IP address within the same network range.

Additionally, **Static IP** mode ensures that the device retains a fixed (static) IP address, preventing it from receiving a dynamically assigned IP from the DHCP server.

Note: After modifying the IP configuration and pressing **'Save Changes'**, you must reconnect to the management panel using the updated IP address.

LED Indicators

Select the operation mode of the indication LEDs on the B-CASTER's front panel.

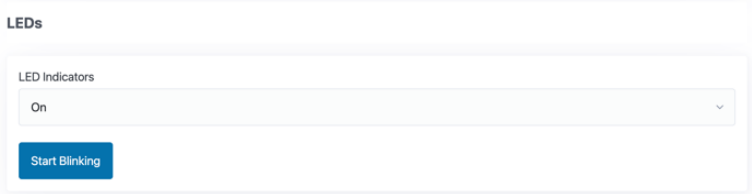

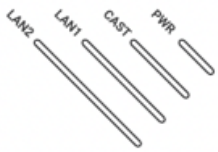

ON	LEDs operate in default mode, indicating whether the device is powered on, broadcasting, and if **LAN 1** and **LAN 2** are connected.
OFF	Turns off the indication LEDs
Audio Indicator	**LAN 1** and **LAN 2** LEDs indicate audio input presence and level.

Press **'Start Blinking'** to flash all LEDs simultaneously.
This is useful for identifying the device when multiple units are in use.

Save Changes

After modifying the device settings, click **'Save Changes'** to apply the changes or **'Reset'** to discard them.

CONNECTION TOPOLOGY

B-CASTER devices support various installation configurations:

Diagram A - Basic installation (Stand-Alone Mode):

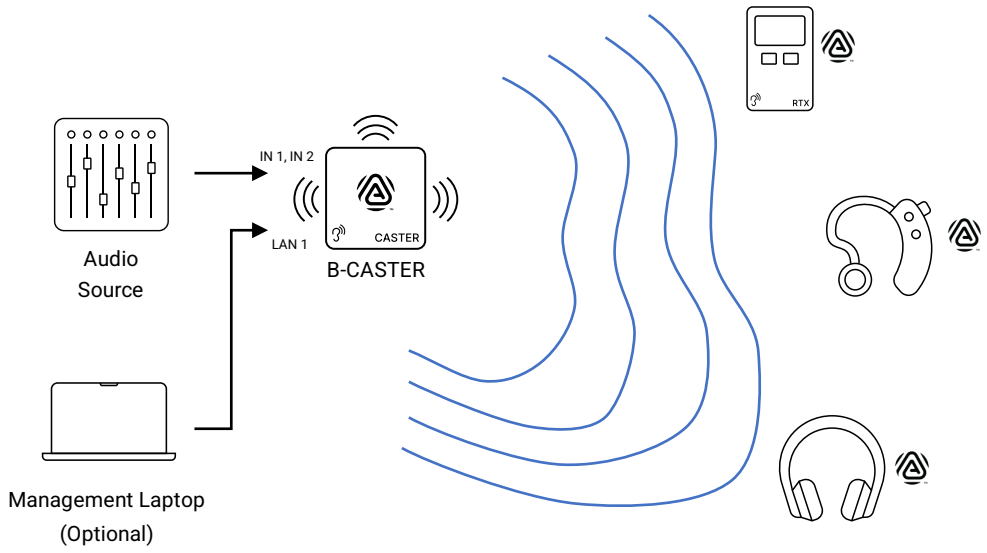

Diagram B – Expanded coverage installation:

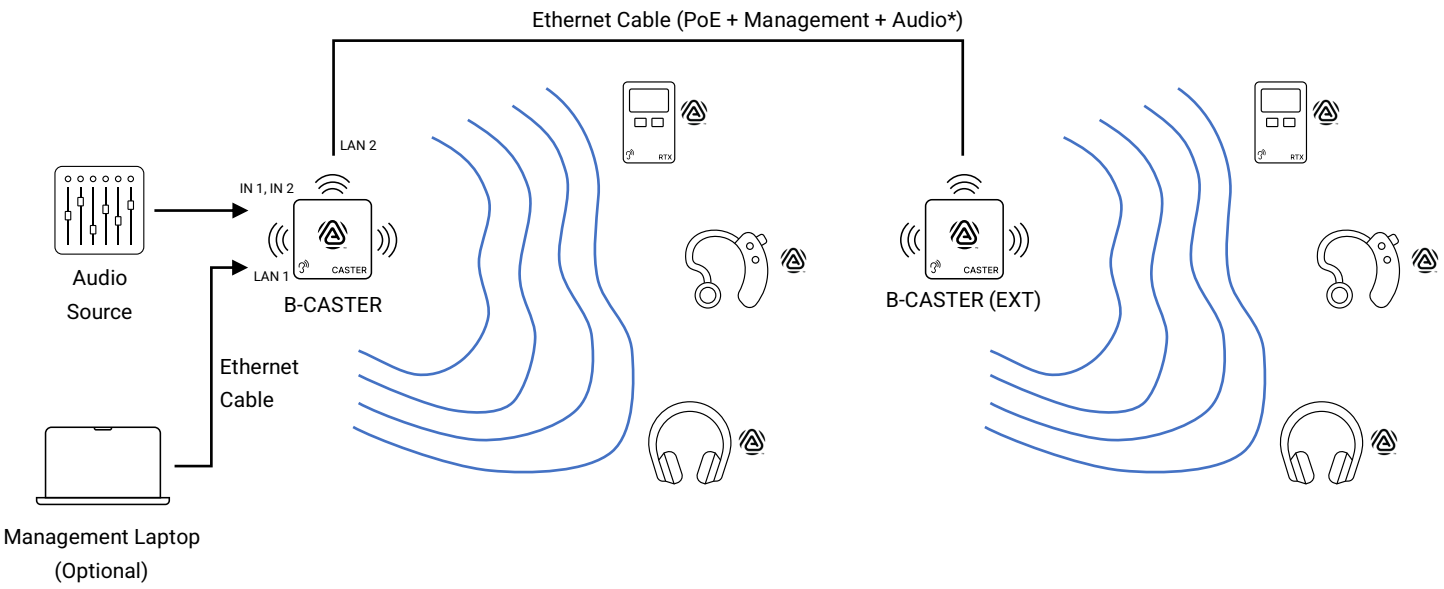

Note: Audio expansion over Ethernet will be supported in a future B-CASTER firmware update.

CASCADING

The B-CASTER features two built-in LAN ports enabling the cascading of multiple devices with power, control and audio over a single Ethernet cable*.

POE CASCADING

A B-CASTER device powered by either a 12V power supply or a PoE (Power over Ethernet) source can power an additional unit via an Ethernet cable. To link more than two units, a power supply or a PoE injector must be connected to the third unit.

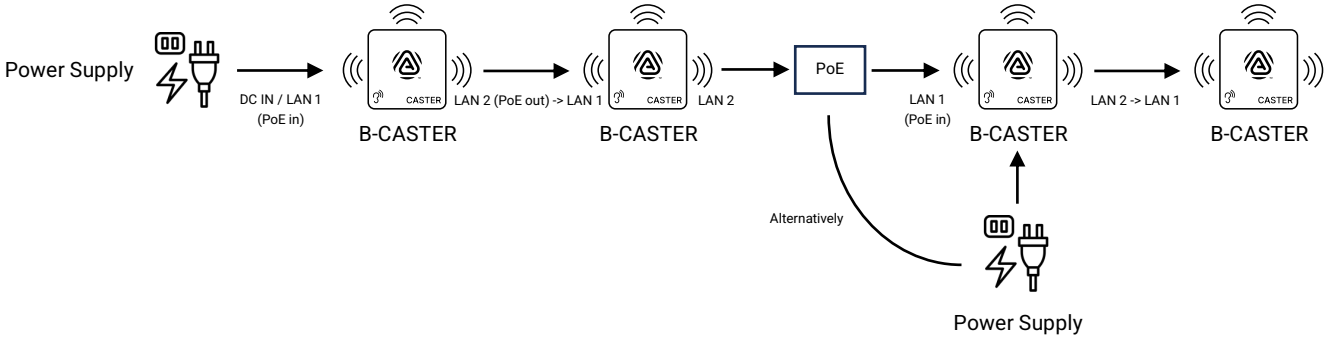

Note: A power source connected to **DC in** takes priority over a PoE source connected to **LAN 1 (PoE in)**. If both power sources are connected, the device will use **DC in**.

CONTROL AND AUDIO CASCADING

The B-CASTER built-in network switch allows up to four devices to be linked via Ethernet for control and audio* transmission.

For larger setups, additional devices can be connected using an external network switch.

Note: Audio expansion over Ethernet will be supported in a future B-CASTER firmware update.

FACTORY RESET

To restore the B-CASTER device to factory settings:

Press and hold the **Reset** button for five seconds using a pin, until the LED indicators on the front panel start blinking.

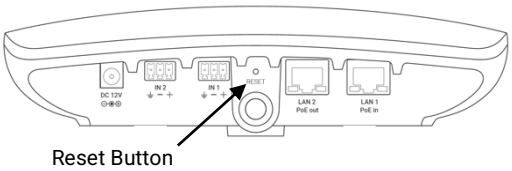

SPECIFICATIONS

Audio Input

Input Modes	Stereo / Mono / Mix
Maximum Input Voltage	2.1Vrms (4.2Vrms for balanced input)
ADC Signal-to-Noise Ratio	110dB
DAC Signal-to-Noise ratio	112dB
ADC THD+N	-90dB
Frequency Response	10Hz-22kHz
Input Gain	-12dB to 32dB
Sample Rate	48kHz
Connection	2 x 3-pin 3.5mm pitch terminal block

Audio Processing

HPF	Off, 80Hz, 120Hz, 250Hz
LPF	Off, 8KHz, 12KHz, 16KHz
AGC	Support for Automatic Gain Control

Radio

Bluetooth Version	5.3
Broadcast Frequency	2400 – 2482 MHz
Codec	LC3
Max TX Power（EIRP）	B-CASTER: 6dBm
Controllable TX Power	Yes (via B-CASTER management panel)
Secure Broadcast	Yes (4–16-character password, AES128)

Network

IP Address	Static, Reserved
Port Speed	LAN 1 – 1 Gbps LAN 2 – 1 Gbps **(Enabled on CASTER-S licensed devices only)**
PoE	LAN 1 – PoE in LAN 2 – PoE out **(Enabled on CASTER-S licensed devices only)**

Environmental

Operating Temperature	-12 °C (10.4 °F) to 40 °C (+104 °F)

Regulatory

Standards	CE, RoHS, REACH, WEEE, FCC, ISED, TELEC, UKCA, RCM

Power

Power Supply	12 VDC (positive polarity), 2.5A * Power supply is not included within the B-CASTER box. Use AC/DC adapter which is safety approved according to IEC/EN 60950-1 or IEC/EN 62368-1 with rated voltage of 9Vdc and which certified as Limited Power Source (LPS). Usage d'adaptateur AC/DC (courant alternatif/courant continu) avec sécurité approuvé par IEC/EN 60 ou IEC/EN 62368-1 , avec une tension nominale de 9Vdc et certifiée comme source d'alimentation limitée (LPS).
PoE	IEEE 802.3at (PoE+, 30W)

PHYSICAL

Weight	B-CASTER – 419 g (0.92 lbs) Mounting Bracket – 25 g (0.05 lbs)
Shipping Weight	589 g (1.3 lbs)
Colors	White, Black

Dimensions

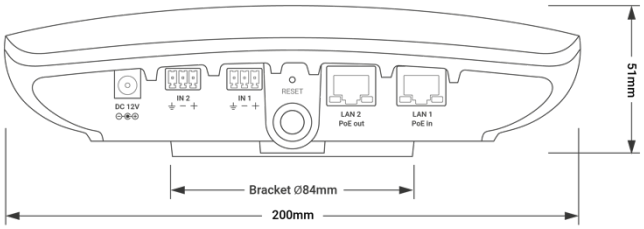

MOUNTING

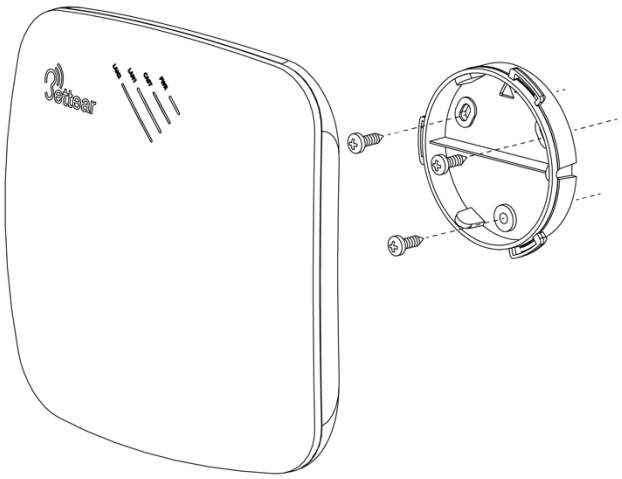

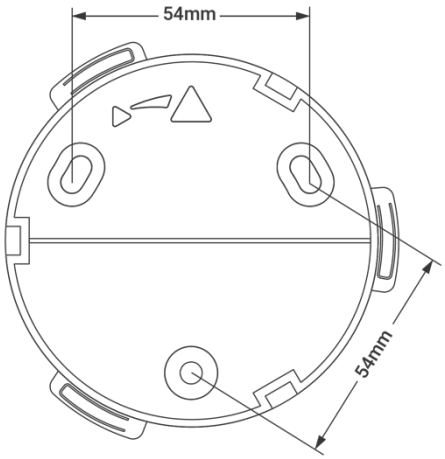

ACCESSORIES

Mounting Bracket A bracket designed for wall or ceiling installation.	Included
B-PASS An add-on for secure streaming, featuring QR scanning and attachment-based connection.	Supported (not included)
B-RTX A designated Auracast™-enabled receiver.	Supported (not included)

WARRANTY

Please visit www.bettear.com for warranty and service information.

WARNING: Electrical Shock Hazard. No user serviceable parts inside. To reduce the risk of electrical shock, do not remove or open the cover. Please contact Bettear for assistance.

PRIVACY POLICY

Please visit www.bettear.com for privacy policy and service information.

SUPPORT

Ha'Barzel 33, Tel-Aviv, Israel		
Website: www.bettear.com	Email: info@bettear.com	Phone: +972-3-777-8630