www.petlayson.com

Merkury 1

Pumpless Automatic Pet Water Fountain

Model: LS-DFPL1210

@PET LAYSON TECHNOLOGY GROUP LLC. All Rights Reserved

Address: 80 ENTERPRISE AVE, SECAUCUS, NEW JERSEY 07094

Made in China

RoHS

This device complies with Part 15 of the FCC Rules. Operation is subject to the following two conditions:
(1) this device may not cause harmful interference, and (2) the device must accept any interference received, including interference that may cause undesired operation.

1-V1.0

PET LAYSON

USER MANUAL

Where Love Meet Innovation

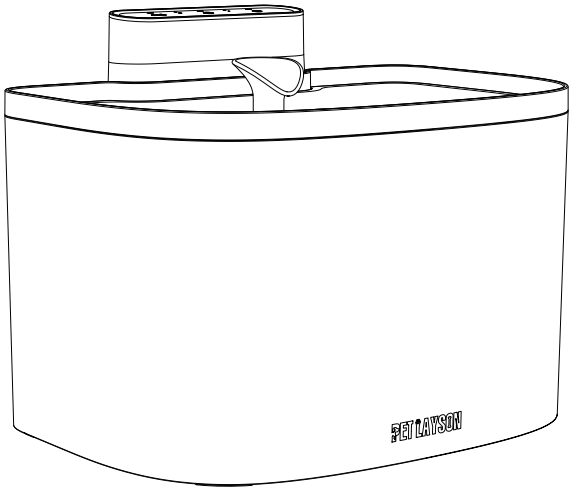

White Black Pink

Merkury 1 Pet Fountain

Please read this manual before using the product and keep it for future reference

Contents

In the Box - - - - - - - - - - - - - - - - - - 01

Product Overview - - - - - - - - - - - - - - - 02

Getting Started - - - - - - - - - - - - - - - - 09

Specifications - - - - - - - - - - - - - - - - 12

Safety Instructions - - - - - - - - - - - - - - 13

Warranty - - - - - - - - - - - - - - - - - - 14

Notice - - - - - - - - - - - - - - - - - - 15

In the Box

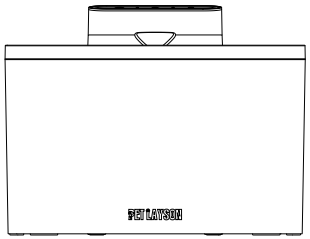

Merkury 1 Pet Fountain X 1

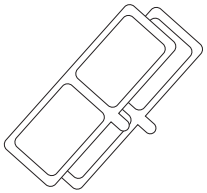

Filter X 2

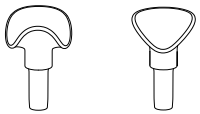

Water Pipe X 2

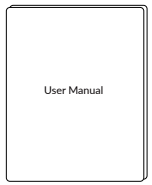

User Manual X1

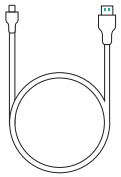

USB Type-C Cable X1

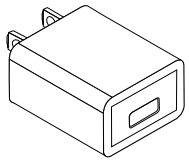

Power Adpter X1

Product Overview

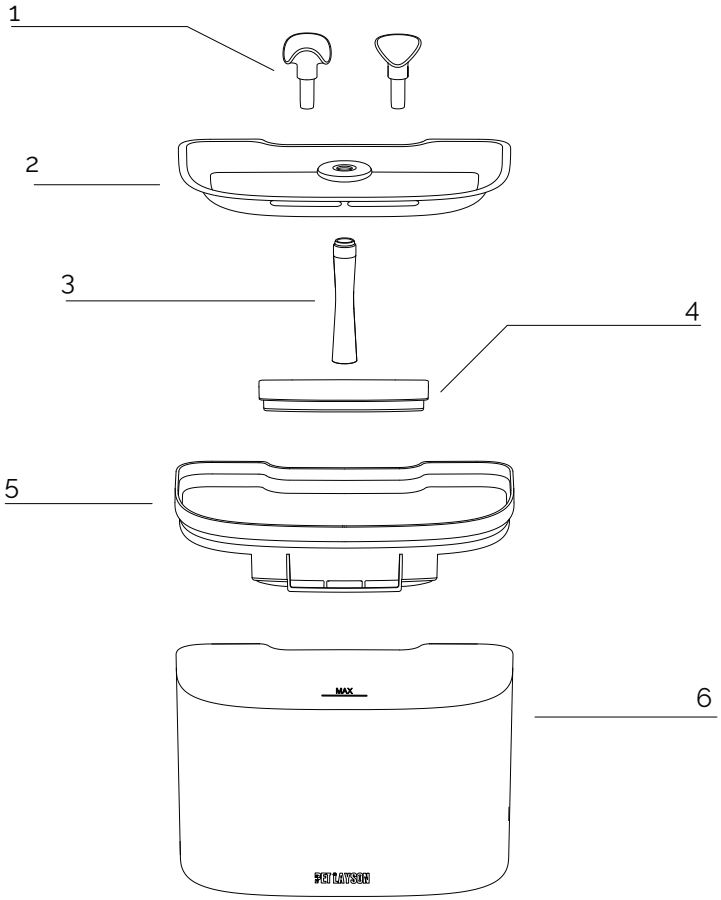

1. Spout
2. Water Tray
3. Water Pipe
4. Filter
5. Filter Tray
6. Water tank

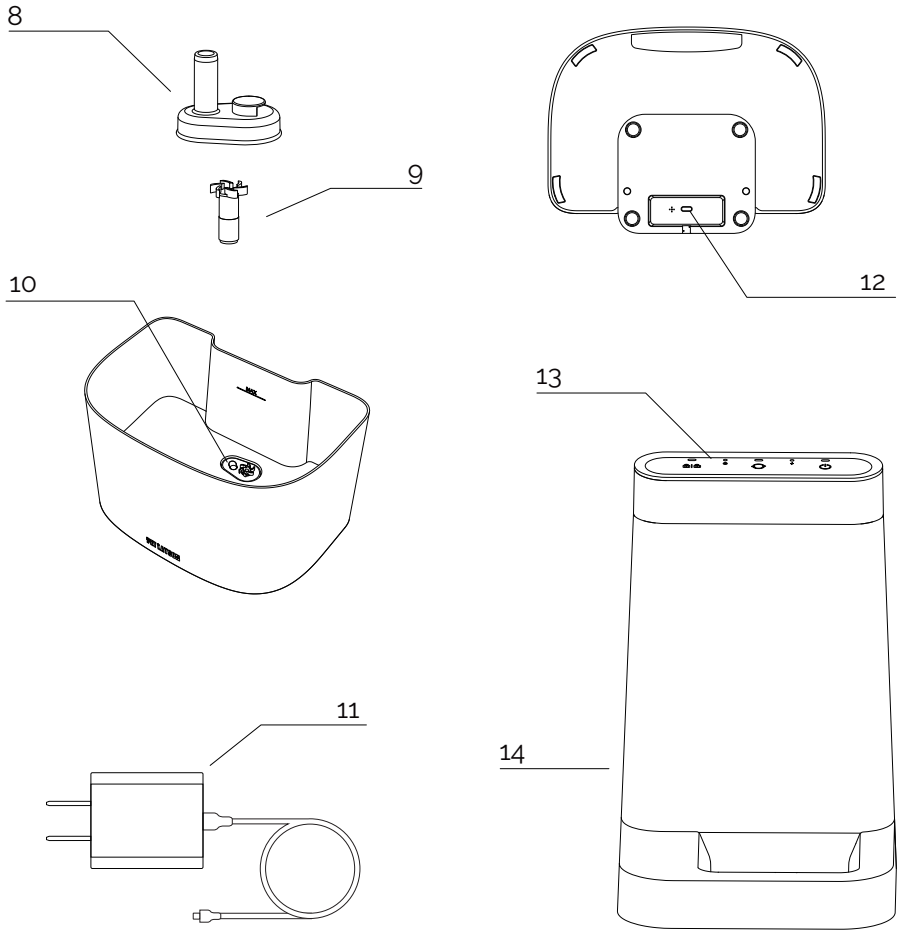

8. Water Pump Cover
9. Water Pump Rotor
10. UVC light
11. Charger
12. Power Supply Port
13. Touch panel
14. Fountain Base

Indicators Overview

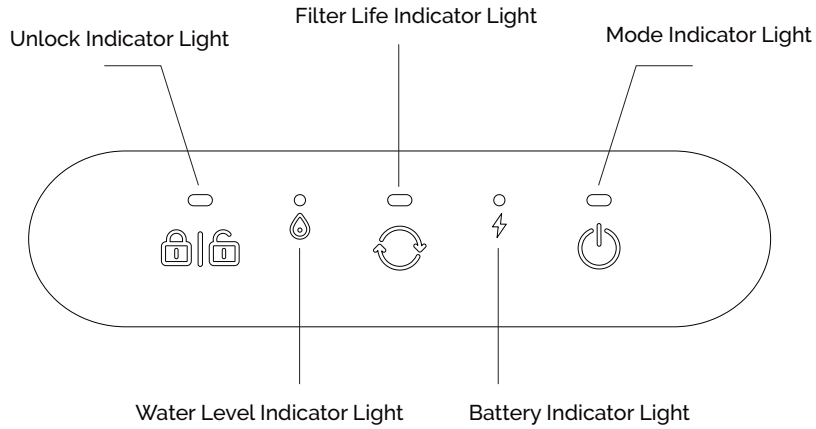

Unlock Indicator Light

Light status	Device status
Solid white	In unlocked state.
Flashing white twice	In locked state, only the unlock button works.
Light off	In locked state.

Water Level Indicator Light

Light status	Device status
Solid dark green	The water tank is full.
Solid light green	The amount of water is large.
Solid light red	The amount of water is moderate.
Solid dark red	The water level is low, you need to pay attention to the water level and be ready to add water.
Flashing dark red	The fountain stops working due to lack of water. Please add water immediately.

Filter Life Indicator Light

Light status	Device status
Solid dark green	The fountain needs to replace the filter. After replacing the filter, press and hold the filter timer reset button for 5 seconds to manually reset the filter timer in the unlocked state.

Battery Indicator Light

Light status	Device status
Solid dark green	The battery is fully charged.
Solid light green	The battery is close to full, but not quite.
Solid light red	Medium power, you may need to consider charging.
Solid dark red	Low battery, need to charge soon.
Flashing dark red	Low battery, the device will shut down.
Breathing green	The device is charging.

Mode Indicator Light

Light status	Device status
Solid green	The device always dispenses water. This mode only works when it is plugged in to a power source.
Solid blue	The device dispenses water for 60 seconds every 2 minutes to extend the life of the water pump. This mode only works when it is plugged in to a power source.
Solid white	When the device detects a pet passing by, it immediately dispenses water for 45 seconds to keep the pet hydrated. This mode works regardless of whether the power supply is connected or not.

⚠ Tips:

After the indicator light automatically turns off, short press any button to check the current status of the device.

Buttons Overview

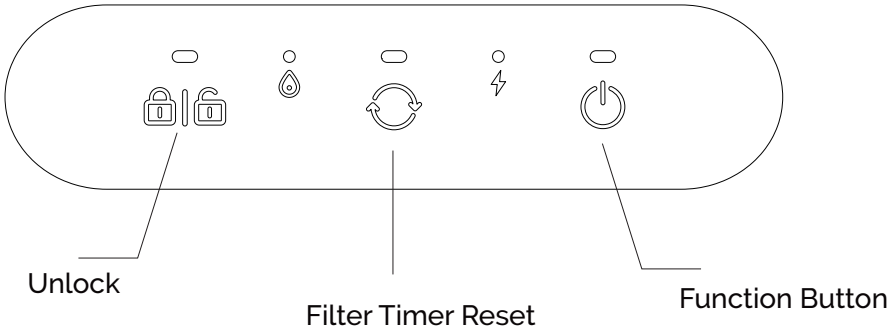

Button	Operation Status
Unlock	Press and hold for 3 seconds to unlock the buttons, and the fountain will emit a reminder sound and the lock indicator light will turn on. In the locked state, only this button will work.
Filter Timer Reset	In the unlocked state, press and hold the filter timer reset button for 5 seconds to manually reset the filter timer. The timer will then begin to recalculate the usage time of the filter, and a reminder sound will indicate that the reset was successful.
Function Button	In the unlocked state, press the function button briefy to switch modes or press and hold the function button for 3 seconds to turn off the fountain. In the power off state, press and hold the function button for 3 seconds to turn on the fountain.

Note: The fountain can only switch working mode when the power is connected.

Getting Started

Installation

Scan the QR code below to watch the video for product installation, or follow the instructions in the manual to install the fountain.

【Operation video】

1. Soak the filter in a clean bowl of water for five minutes, then rinse the filter thoroughly with tap water.

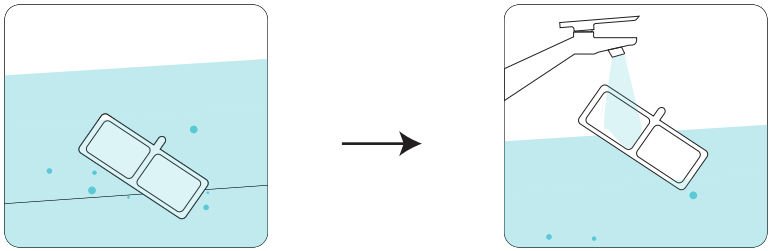

2. First install the water dispenser, then add purified water to the water tank, and finally place the water tank on the base.

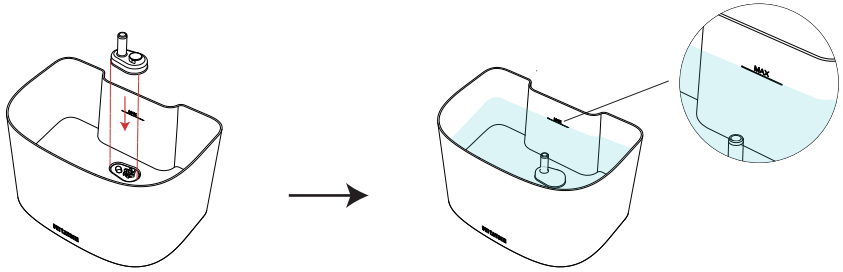

Care and Maintenance

· Power off the device before cleaning.

· Replace the filter at least once every 2 weeks.

· Clean the fountain at least once every 2 weeks.

· Use a soft damp cloth to clean the fountain base. Do not wash any components part with electronic.

· Use the brush to clean the water pipe.

Power on

(1) Connect The Type-C end of cable to the power port on the base. Put the cable into one of the cable slots, and plug the other end into the power adapter.

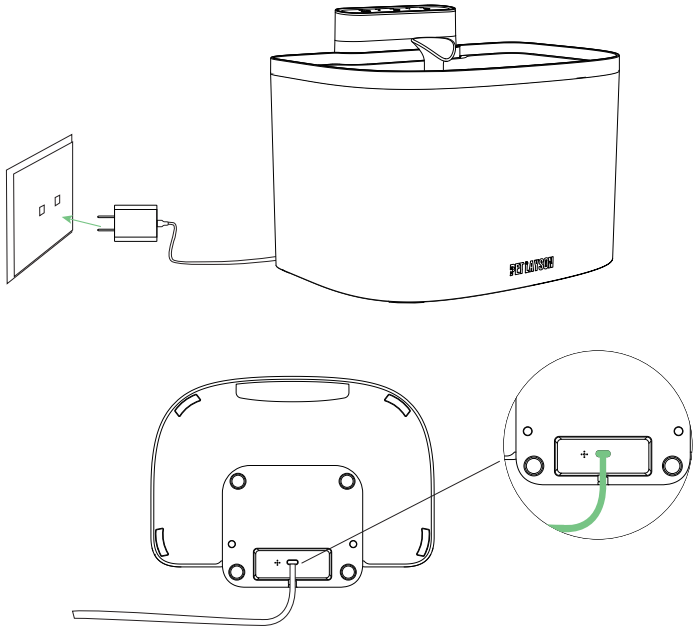

(2) When not connected to the power source, this device is powered by the built-in battery.

* First press and hold the unlock button for 3 seconds, then press and hold the function button for 3 seconds to turn on the device.

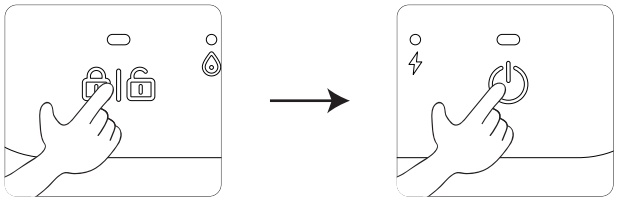

Power off

First press and hold the unlock button for 3 seconds, then press and hold the function button for 3 seconds to turn off the device.

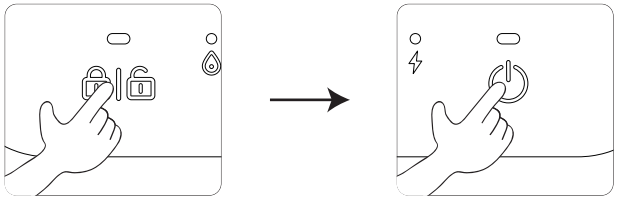

Specifications

Model	LS-DFPL1210
Power Adapter	Input: 100-240V 50/60Hz Output: 5V/1A
Material	ABS, stainless steel
Water Tank Capacity	2.6L
Dimensions	255x190x195 mm / 10.04x7.48x7.68 inch
Net Weight	35.2 lbs
Battery	5000 mAh

Safety Instructions

- Use the fountain in a dry place.
- Use the fountain on a level surface.
- Dispose of all packaging materials properly. Some items may be packed in plastic bags; these bags could cause suffocation. Keep them away from children and pets.
- Do not use the fountain with pets that are not able to reach the water tray or that have any physical disability.
- Do not immerse the base part in water at any time as it may damage electronic components.
- Do not use the fountain outdoors. Check its operation frequently to be sure it is operating properly.
- Do not disassemble the fountain other than as instructed in this user manual.
- Only use accessories recommended or sold by the manufacturer. The use of accessories not recommende or sold by the manufacturer may result in an unsafe condition.
- Do not modify the fountain.
- Examine the fountain after installation. Do not plug in if there is water on the power cable or plug.
- To avoid tripping, always position the power cable out of the way of foot traffic.

- Do not install or store the fountain where it will be exposed to weather or temperatures below 0˚C(32˚F). Do not use the fountain; without adding water first. Power off the fountain when it is not in
- Do not put any parts of the fountain in the dishwasher.

Warranty

- 12-month warranty.
- For guidance on product use, please contact our customer service team via email: **support@petlayson.com**

Notice

This device complies with Part 15 of the FCC Rules. Operation is subject to the following two conditions:

(1) This device may not cause harmful interference, and

(2) This device must accept any interference received, including interference.

Changes or modifications to this unit not expressly approved by the party responsible for compliance could void the user's authority to operate the equipment.

Note: This equipment has been tested and found to comply with the limits for a Class B digital device, pursuant to Part 15 of the FCC Rules.

These limits are designed to provide reasonable protection against harmful interference in a residential installation. This equipment generates, uses, and can radiate radio frequency energy and, if not installed and used in accordance with the instructions, may cause harmful interference to radio communications. However, there is no guarantee that interference will not occur in a particular installation. If this equipment does cause harmful interference to radio or television reception, which can be determined by turning the equipment off and on, the user is encouraged to try to correct the interference by one or more of the following measures:

* Reorient or relocate the receiving antenna.
* Increase the separation between the equipment and receiver.
* Connect the equipment into an outlet on a circuit different from that to which the receiver is connected. Consult the dealer or an experienced radio/TV technician for help.

This device and its antenna(s) must not be co-located or operated in conjunction with any other antenna or transmitter.

RF warning for Mobile device:
This equipment complies with FCC radiation exposure limits set forth for an uncontrolled environment. This equipment should be installed and operated with minimum distance 20cm between the radiator & your body.