SMD CERAMIC ANTENNA
Data Sheet

TS1608E245K02

For 2400-2500MHz

1.6x0.8x0.4mmmm [EIA1608]

Feature

- Light weight, compact
- Wide bandwidth, low cost
- Built-in antenna with high gain
- Operating Temp. : -40℃~+85℃

Application

- Bluetooth
- WLAN 2.4
- WiFi 5/6/6E
- UWB

TS1608E245K02

Product Dimension

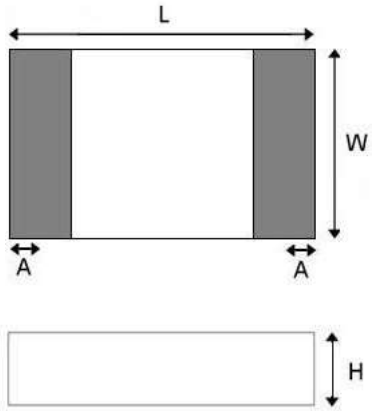

Units:mm

L	W	H	A
1.60±0.20	0.80±0.20	0.40±0.10	0.2±0.07

Electrical Characteristics per line(TA=25℃)

Parameter	Specification	Units
Frequency Band	2400~2500	MHz
Polarization	Linear	
* Peak Gain	2.78	dBi
* Peak Efficiency	80.25	%
Impendance	50	Ω

Test condition: Test board size 70*60 mm;
Matching circuit: Pi matching circuit will be required.

PART NUMBERING SYSTEM

TS	-	1608	-	E	-	2450	-	K	-	02
Brand		Dimension		Material		**Frequency**		**Feeding mode**		**Type**

Recommend PCB Layout1

Test condition: Test board size 70*60 mm;

Top Layer (unit mm)

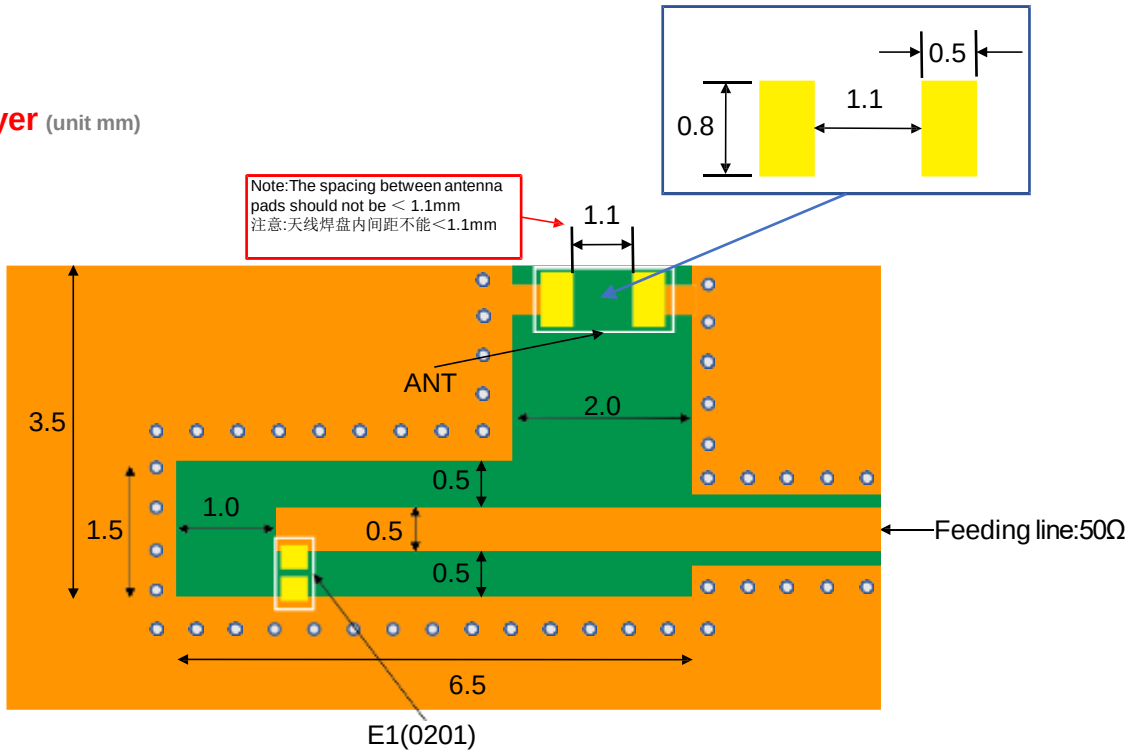

Bottom Layer (unit mm)

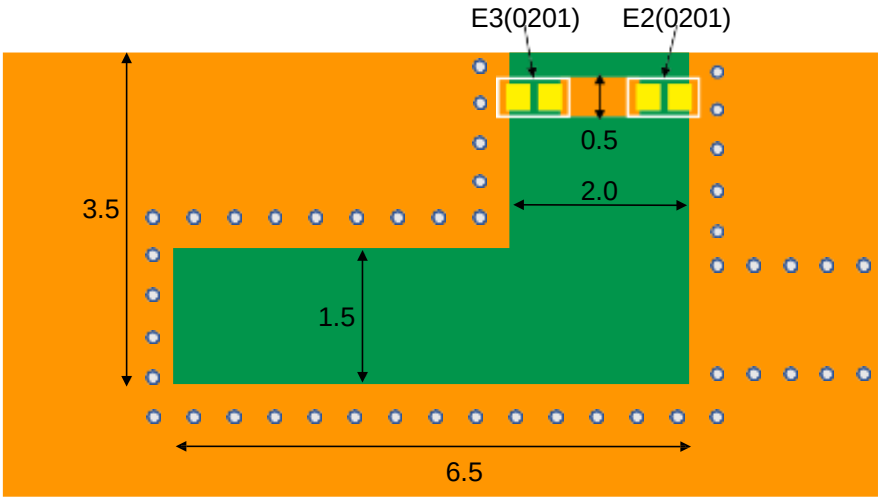

Recommend PCB Layout2

Test condition: Test board size 70*60 mm;

Top Layer (unit mm)

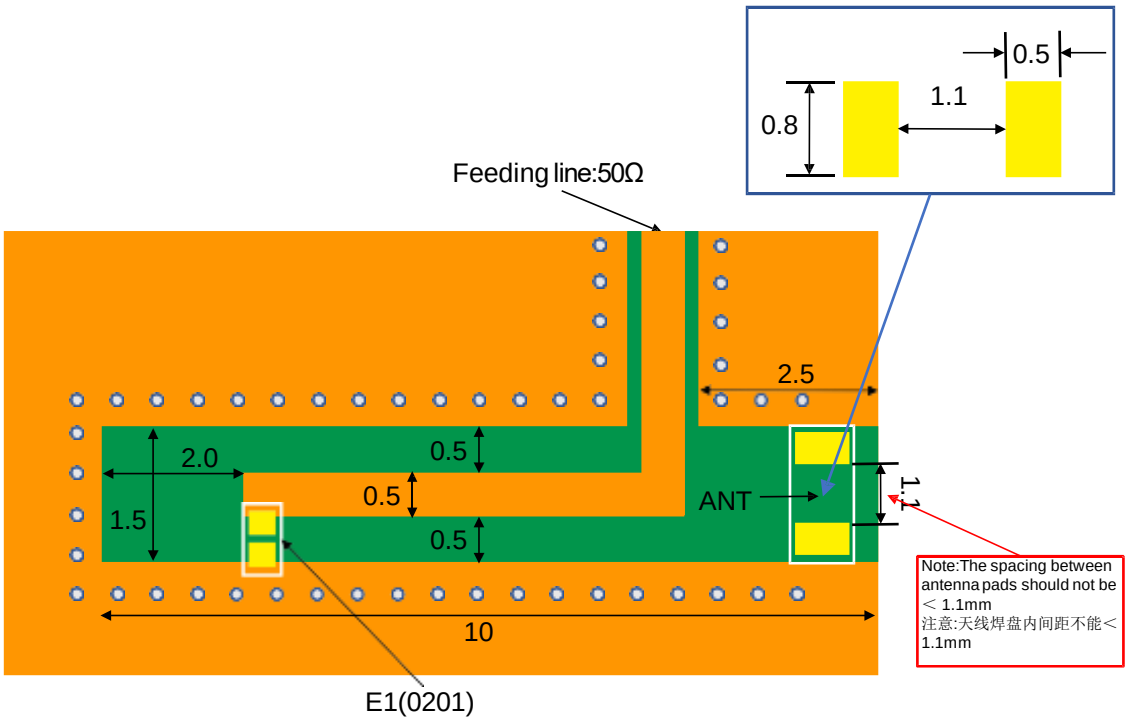

Bottom Layer (unit mm)

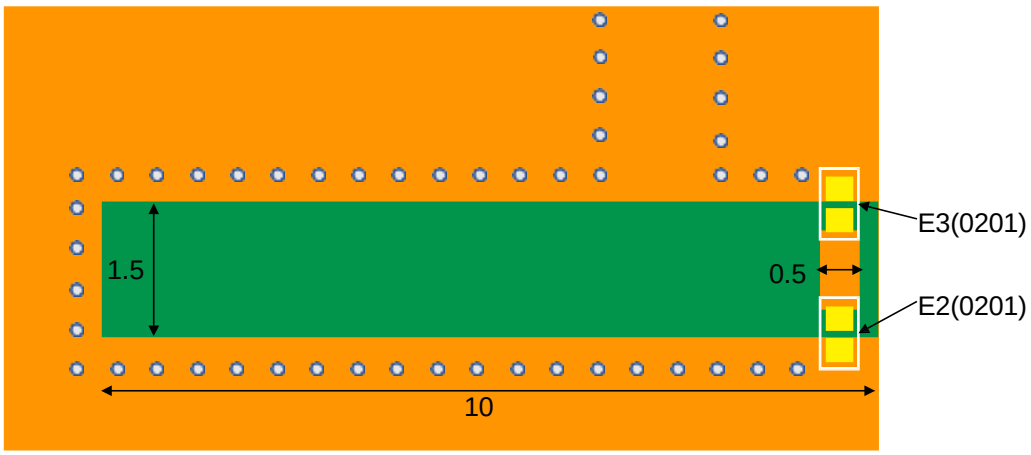

Typical Characteristics

Fig. 1 Return Loss

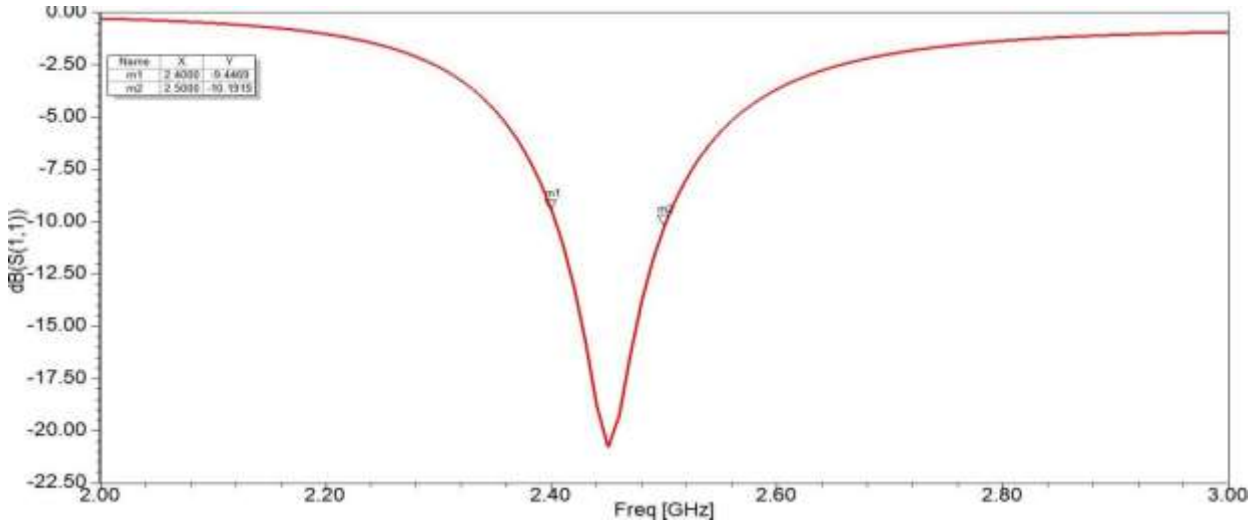

Radiation Pattern

The Gain pattern is measured in FAR -field chamber. DUT is placed on the table of rotator , a standard horn antenna and Vector Network Analyzer is used to collect data.

Fig.2 FAR-field Chamber

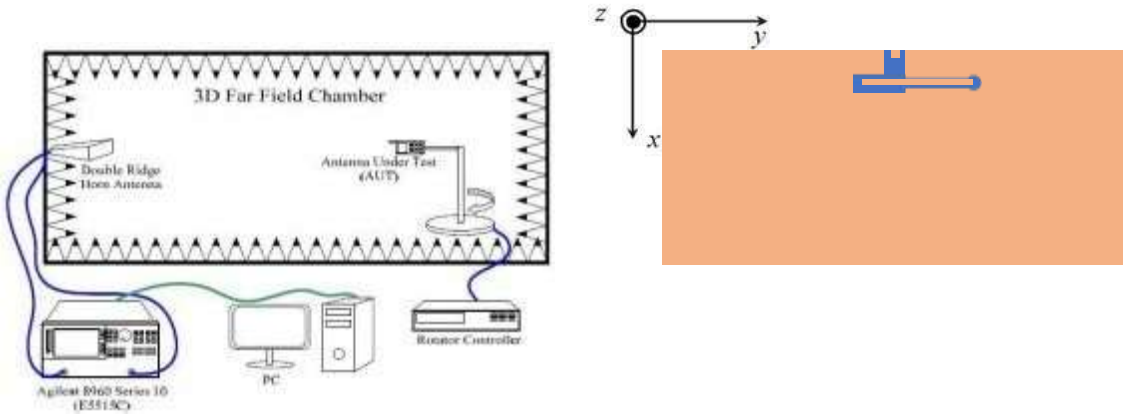

Equivalent circuit:

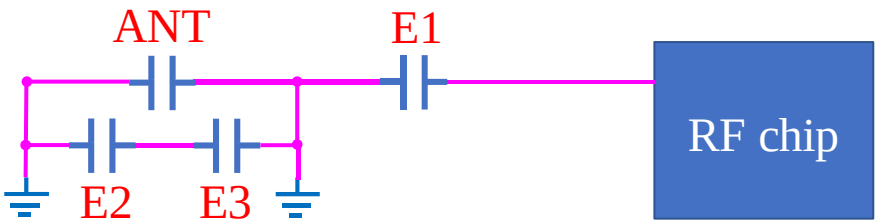

2D Gain Pattern

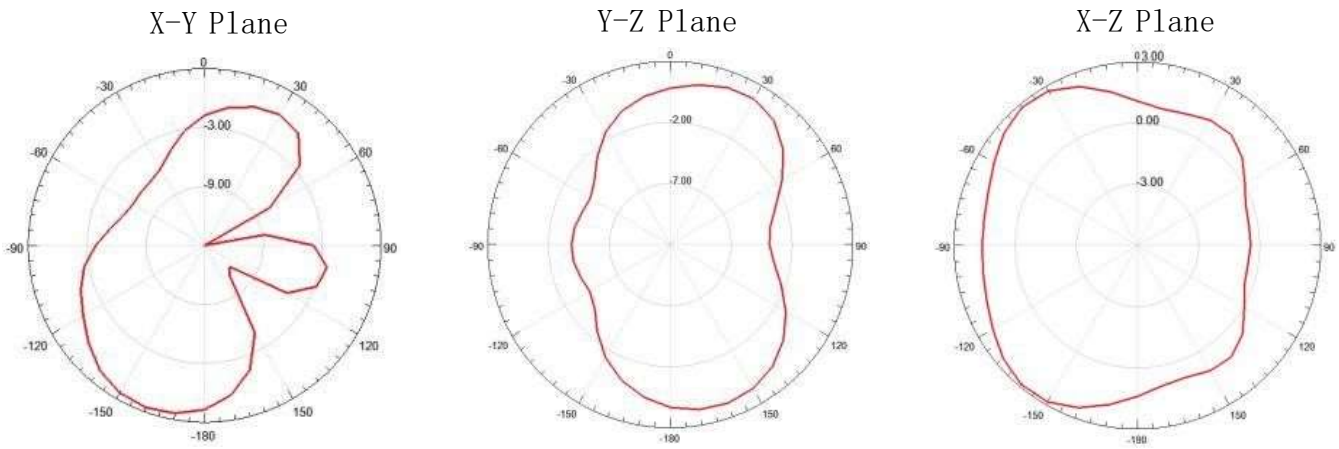

Radiation Performance:

Frequency	2400MHz	2450MHz	2500MHz
Avg. gain	-1.92	-1.35	-1.56
Peak gain	1.79	2.78	2.66
Efficiency	74.55	80.25	76.98

Item	Condition	Specification
Thermal shock	1. 30±3 minutes at -40°C±5°C, 2. Convert to +105°C (5 minutes) 3. 30±3 minutes at +105°C±5°C, 4. Convert to -40°C (5 minutes) 5. Total 100 continuous cycles	No apparent damage Fulfill the electrical spec. after test.
Humidity resistance	1. Humidity: 85% R.H. 2. Temperature: 85±5°C 3. Time: 1000 hours.	No apparent damage Fulfill the electrical spec. after test.
High temperature resistance	No apparent damage Fulfill the electrical spec. after test.	1. Temperature: 150°C±5°C 2. Time: 1000 hours.
Low temperature resistance	1. Temperature: -40°C±5°C 2. Time: 1000 hours.	No apparent damage Fulfill the electrical spec. after test.
Soldering heat resistance	1. Solder bath temperature : 260±5℃ 2. Bathing time: 10±1 seconds	No apparent damage
Solderability	The dipped surface of the terminal shall be at least 95% covered with solder after dipped in solder bath of 245±5℃ for 3±1 seconds.	No apparent damage

(2) Storage Condition

(a)At warehouse: The temperature should be within 0 ~ 30℃ and humidity should be less than 60% RH.The product should be used within 1 year from the time of elivery.

(b)On board: The temperature should be within -40 ~85℃ and humidity should be less than 85% RH.

(3) Operating Temperature Range

Operating temperature range : -40℃ to +85℃.

Recommended Reflow Solder curve

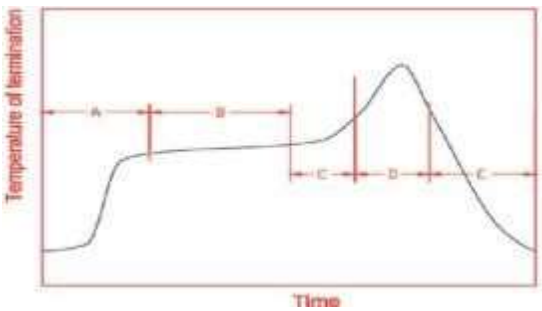

A	1st rising temperature	The normal to Preheating temperature	30s to 60s
B	Preheating	140℃ to 160℃	60s to 120s
C	2nd rising temperature	Preheating to 200℃	20s to 40s
D	Main heating	# 220℃	50s~60s
		# 230℃	40s~50s
		# 240℃	30s~40s
		# 250℃	20s~40s
		# 260℃	20s~40s
E	Regular cooling	200℃ to 100℃	1℃/s ~ 4℃/s

*reference: J-STD-020C

(1) Soldering Gun Procedure

Note the follows, in case of using solder gun for replacement.

(a)The tip temperature must be less than 350°C for the period within 3 seconds by using soldering gun under 30 W.

(b)The soldering gun tip shall not touch this product directly. (2) Soldering Volume

Note that excess of soldering volume will easily get crack the body of this product.

Package Information

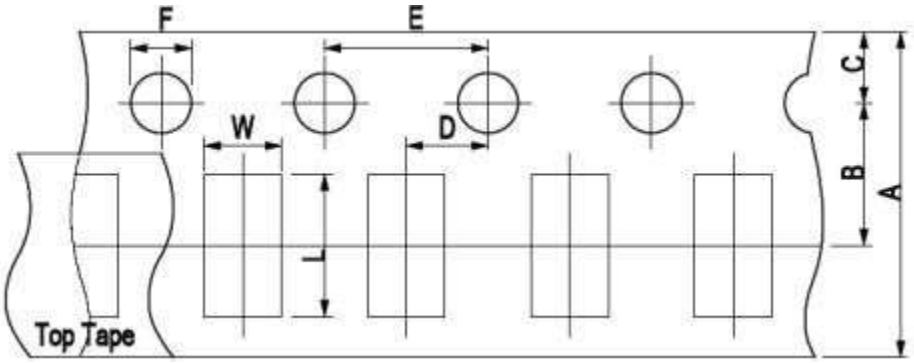

A	B	C	D	E	F	L	W
8.00±0.3	3.50± 0.05	1.75±0.1	2.00±0.05	4.00±0.1	1.50±0.1	2.30± 0.1	1.55± 0.1

Order Information

Device	Package	Net Weight	Carrier	Quantity	HSF Status
TS1608E245K02	1608	0.002g	Reel	5000pcs	RoHS compliant

PACKAGING STYLE

REEL DIMENSIONS

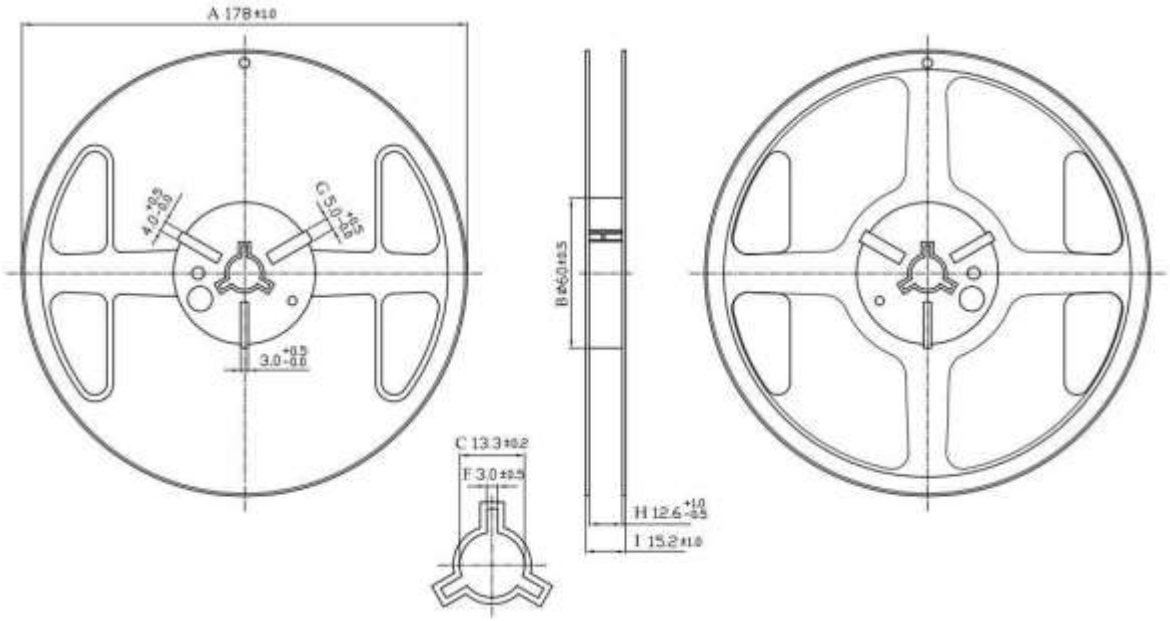

Revision history

Date	Revision	Description of changes
2021-12-20	1.0	First Version
2023-10-15	1.1	Add PCB Layout

The contents of this data sheet are subject to change without notice.
Please confirm the specifications and delivery conditions when placing your order.

© Copyright 2016, Tsun Technology
All rights reserved