RADIO TEST REPORT

FCC ID: 2BOD5-RCTGEN2A4AIM

Product: Remote Control

Trade Mark: N/A

Model No.: RCTGen2A4AIM

Family Model: N/A

Report No.: S25031103103001

Issue Date: Apr. 14, 2025

Prepared for

Limx Dynamics Technology Co.,Ltd.
1511-009A, Xiangjiang Financial Building, No. 3046 Xinghai Avenue, Nanshan District, Shenzhen, China

Prepared by

Shenzhen NTEK Testing Technology Co., Ltd.
No. 24 Xinfa East Road, Xiangshan Community, Xinqiao Street, Baoan District, Shenzhen, Guangdong, People's Republic of China
Tel. 0755-23200050 Website: http://www.ntek.org.cn

Table of Contents Page

1. TEST RESULT CERTIFICATION 4
2. SUMMARY OF TEST RESULTS 5
3.FACILITIES AND ACCREDITATIONS 6
3.1 FACILITIES 6
3.2 LABORATORY ACCREDITATIONS AND LISTINGS 6
3.3 MEASUREMENT UNCERTAINTY 6
4.GENERAL DESCRIPTION OF EUT 7
5. DESCRIPTION OF TEST MODES 9
6.SETUP OF EQUIPMENT UNDER TEST 10
6.1BLOCK DIAGRAM CONFIGURATION OF TEST SYSTEM 10
6.2 DESCRIPTION OF SUPPORT UNITS(CONDUCTED MODE) 11
6.3EQUIPMENTS LIST FOR ALL TEST ITEMS 12
7.ANTENNA REQUIREMENT 13
7.1 STANDARD REQUIREMENT 13
7.2 EUT ANTENNA 13
8. CONDUCTED EMISSION MEASUREMENT 14
8.1 APPLICABLE STANDARD 14
8.2 CONFORMANCE LIMIT 14
8.3 MEASURING INSTRUMENTS 14
8.4 TEST CONFIGURATION 14
8.5TEST PROCEDURE 14
8.6TEST RESULTS 15
9. RADIATED EMISSION MEASUREMENT 17
9.1APPLICABLE STANDARD 17
9.2RADIATED EMISSION LIMITS(FCC 15.209) 17
9.3 TEST PROCEDURE 19
9.4 TEST SETUP 21
9.5 TEST RESULTS 22
10. BANDWIDTH TEST 28
10.1 TEST PROCEDURE 28
10.2 DEVIATION FROM STANDARD 28
10.3 TEST SETUP 28

Table of Contents **Page**

10.4 TEST RESULTS **29**

11. TRANSMITTER TIMEOUT **30**

11.1 REQUIREMENTS **30**

1. TEST RESULT CERTIFICATION

Applicant's name..... :	Limx Dynamics Technology Co.,Ltd.
Address ..... :	1511-009A, Xiangjiang Financial Building, No. 3046 Xinghai Avenue, Nanshan District, Shenzhen, China
Manufacturer's Name..... :	Limx Dynamics Technology Co.,Ltd.
Address ..... :	1511-009A, Xiangjiang Financial Building, No. 3046 Xinghai Avenue, Nanshan District, Shenzhen, China
Product description	
Product name..... :	Remote Control
Trademark ..... :	N/A
Model and/or type reference ..... :	RCTGen2A4AIM
Family Model..... :	N/A
Test Sample Number ..... :	S250311031002
Date of Test.....:	Mar. 12, 2025 ~ Apr. 11, 2025

Measurement Procedure Used:

APPLICABLE STANDARDS	
APPLICABLE STANDARD/TEST PROCEDURE	**TEST RESULT**
FCC 47 CFR Part 15, Subpart C ANSI C63.10-2013	**Complied**

This device described above has been tested by Shenzhen NTEK Testing Technology Co., Ltd., and the test results show that the equipment under test (EUT) is in compliance with the FCC requirements. And it is applicable only to the tested sample identified in the report.
This report shall not be reproduced except in full, without the written approval of Shenzhen NTEK Testing Technology Co., Ltd., this document may be altered or revised by Shenzhen NTEK Testing Technology Co., Ltd. personnel only, and shall be noted in the revision of the document.
The test results of this report relate only to the tested sample identified in this report.

Prepared By :	Reviewed By :	Approved By :
Kieron Luo	Aaron Cheng	Alex Li
Kieron Luo (Project Engineer)	Aaron Cheng (Supervisor)	Alex Li (Manager)

2. SUMMARY OF TEST RESULTS

FCC Part15 (15.231), Subpart C			
Standard Section	Test Item	Judgment	Remark
15.207	Conducted Emission	PASS	
15.203	Antenna Requirement	Pass	
15.231(b) 15.209 15.205	Radiated Spurious Emission	Pass	
15.231(c)	Occupied Bandwidth	Pass	
15.231(a)(1)	Transmitter Timeout	Pass	

NOTE:
(1) ” N/A” denotes test is not applicable in this Test Report.
(2) The EUT is using a new battery

3.FACILITIES AND ACCREDITATIONS

3.1 FACILITIES

All measurement facilities used to collect the measurement data are located at
No. 24 Xinfa East Road, Xiangshan Community, Xinqiao Street, Baoan District, Shenzhen, Guangdong, People's Republic of China.
The sites are constructed in conformance with the requirements of ANSI C63.7, ANSI C63.10 and CISPR Publication 22.

3.2 LABORATORY ACCREDITATIONS AND LISTINGS

Site Description		
CNAS-Lab.	:	The Certificate Registration Number is L5516.
IC-Registration		The Certificate Registration Number is 9270A. CABidentifier:CN0074
FCC- Accredited		Test Firm Registration Number:463705. Designation Number: CN1184
A2LA-Lab.		The Certificate Registration Number is 4298.01
Name of Firm	:	ShenzhenNTEK Testing Technology Co., Ltd.
Site Location	:	No. 24 Xinfa East Road, Xiangshan Community, Xinqiao Street, Baoan District, Shenzhen, Guangdong, People's Republic of China

3.3 MEASUREMENT UNCERTAINTY

The reported uncertainty of measurement y±U, where expended uncertainty U is based on astandard uncertainty multiplied by a coverage factor of k=2, providing a level of confidence of approximately 95%.

No.	Item	Uncertainty
1	Conducted Emission Test	±2.80dB
2	RF power,conducted	±0.16dB
3	Spurious emissions,conducted	±0.21dB
4	All emissions,radiated(30MHz~1GHz)	±2.64dB
5	All emissions,radiated(1GHz~6GHz)	±2.40dB
6	All emissions,radiated(> 6GHz)	±2.52dB
7	Occupied bandwidth	±5%
8	Temperature	±0.5°C
9	Humidity	±2%
10	All emissions, radiated(9KHz~30MHz)	±6dB

4.GENERAL DESCRIPTION OF EUT

Equipment	Remote Control
Trade Name	N/A
Model Name	RCTGen2A4AIM
Family Model	N/A
Model Difference	N/A
Product Description	The EUT is a Remote Control Operation Frequency: 434MHz Modulation Type: DSSS Number Of Channel 1CH Antenna Designation: FPC Antenna Antenna Gain: 1.69dBi Based on the application, features, or specification exhibited in User's Manual, the EUT is considered as an ITE/Computing Device. More details of EUT technical specification, please refer to the User's Manual.
Channel List	Refer to below
Adapter	N/A
Battery	3.7V, 1000mAh, 3.7Wh
Power Supply	DC 3.7V from battery or DC 5V from charge port
Hardware Version:	RCTGen2A4AIM
Firmware Version:	V3.0.6
Software Version:	V2.0.12

Note:

1. For a more detailed features description, please refer to the manufacturer's specifications or the User's Manual.
2.

Channel	Frequency (MHz)
01	434MHz
--	--

Revision History

Report No.	Version	Description	Issued Date
S25031103103001	Rev.01	Initial issue of report	Apr. 14, 2025

5. DESCRIPTION OF TEST MODES

To investigate the maximum EMI emission characteristics generates from EUT, the test system was pre-scanning tested base on the consideration of following EUT operation mode or test configuration mode which possible have effect on EMI emission level. Each of these EUT operation mode(s) or test configuration mode(s) mentioned above was evaluated respectively.

Pretest Mode	Description
Mode 1	TX

For Radiated Emission	
Final Test Mode	Description
Mode 1	TX

6.SETUP OF EQUIPMENT UNDER TEST

6.1BLOCK DIAGRAM CONFIGURATION OF TEST SYSTEM

For Conducted Test Cases

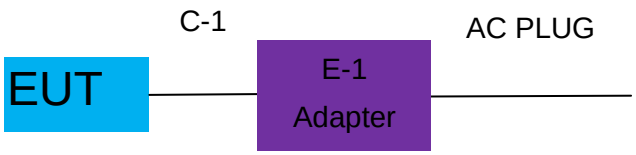

For Radiated Test Cases

For Conducted Test Cases

Note:The temporary antenna connector is soldered on the PCB board in order to perform conducted tests and this temporary antenna connector is listed in the equipment list.

6.2 DESCRIPTION OF SUPPORT UNITS(CONDUCTED MODE)

The EUT has been tested as an independent unit together with other necessary accessories or support units. The following support units or accessories were used to form a representative test configuration during the tests.

Item	Equipment	Model/Type No.	Manufacturer	Note
EUT	Remote Control	RCTGen2A4AIM	Limx Dynamics Technology Co.,Ltd.	N/A
E-1	adapter	MDY-11-EF	Xiaomi Technology Co. LTD	N/A

Item	Cable Type	Shielded Type	Ferrite Core	Length
C-2	Power Cable	NO	NO	1.0m
C-2	RF Cable	Yes	NO	0.1m

Note:

(1) The support equipment was authorized by Declaration of Confirmation.
(2) For detachable type I/O cable should be specified the length in cm in『Length』column.
(3) “YES” is means “shielded”“with core”; “NO” is means “unshielded”“without core”.

6.3EQUIPMENTS LIST FOR ALL TEST ITEMS

Radiation Test equipment

	Kind of Equipment	Manufacturer	Type No.	Serial No.	Last calibration	Calibrated until	Calibration period
1	Spectrum Analyzer	Agilent	E4440A	MY41000130	2024.04.26	2025.04.25	1 year
2	Spectrum Analyzer	Agilent	N9020A	MY49100060	2024.04.25	2025.04.24	1 year
3	Spectrum Analyzer	R&S	FSV40	101417	2024.04.25	2025.04.24	1 year
4	Test Receiver	R&S	ESPI7	101318	2024.04.26	2025.04.25	1 year
5	Bilog Antenna	TESEQ	CBL6111D	31216	2024.05.12	2025.05.11	1 year
6	50Ω Coaxial Switch	Anritsu	MP59B	6200983705	2024.04.26	2027.04.25	3 year
7	Horn Antenna	SCHWARZBECK	BBHA 9120 D	2816	2024.05.18	2027.05.17	3 year
8	Broadband Horn Antenna	SCHWARZBECK	BBHA 9170	803	2024.05.12	2027.05.11	3 year
9	Amplifier	EMC	EMC051835 SE	980246	2024.04.25	2025.04.24	1 year
10	Active Loop Antenna	SCHWARZBECK	FMZB 1519 B	055	2024.05.17	2027.05.16	3 year
11	Power Meter	DARE	RPR3006W	15I00041SNO84	2024.04.25	2025.04.24	1 year
12	Test Cable (9KHz-30MHz)	N/A	R-01	N/A	2022.06.17	2025.06.16	3 year
13	Test Cable (30MHz-1GHz)	N/A	R-02	N/A	2022.06.17	2025.06.16	3 year
14	High Test Cable(1G-40GHz)	N/A	R-03	N/A	2022.06.17	2025.06.16	3 year
15	Filter	TRILTHIC	2400MHz	29	2024.04.26	2027.04.25	3 year
16	temporary antenna connector (Note)	NTS	R001	N/A	N/A	N/A	N/A

Note:
We will use the temporary antenna connector (soldered on the PCB board) When conducted test
And this temporary antenna connector is listed within the instrument list

7.ANTENNA REQUIREMENT

7.1 STANDARD REQUIREMENT

15.203 requirement: For intentional device, according to 15.203: an intentional radiator shall be designed to ensure that no antenna other than that furnished by the responsible party shall be used with the device.

7.2 EUT ANTENNA

The EUT antenna is permanent attached FPC Antenna(Gain: 1.69 dBi). It comply with the standard requirement.

8. CONDUCTED EMISSION MEASUREMENT

8.1 Applicable Standard

According to FCC Part 15.207(a)

8.2 Conformance Limit

Frequency(MHz)	Conducted Emission Limit	
	Quasi-peak	Average
0.15-0.5	66-56*	56-46*
0.5-5.0	56	46
5.0-30.0	60	50

Note: 1. *Decreases with the logarithm of the frequency
2. The lower limit shall apply at the transition frequencies
3. The limit decreases in line with the logarithm of the frequency in the range of 0.15 to 0.50MHz.

8.3 Measuring Instruments

The Measuring equipment is listed in the section 6.3 of this test report.

8.4 Test Configuration

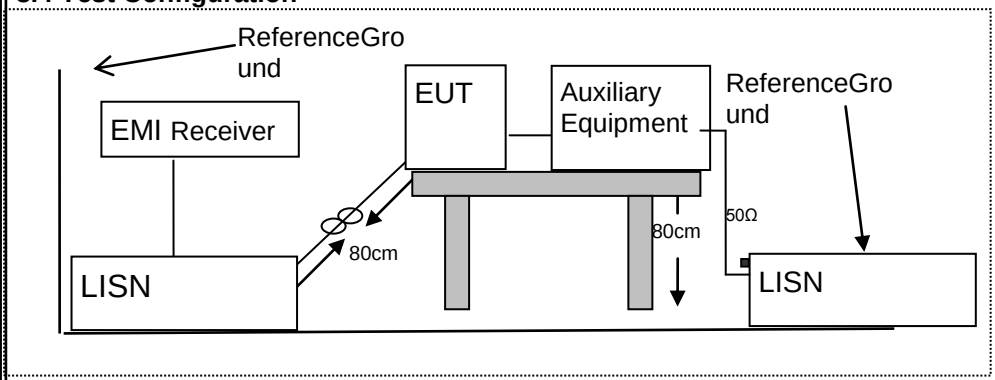

8.5Test Procedure

According to the requirements in Section 13.1.4.1 of ANSI C63.10-2013 Conducted emissionsthe EUT measured in the frequency range between 0.15 MHz and 30 MHz using CISPR Quasi-Peak and average detector mode.

1. The EUT was placed 0.4 meter from the conducting wall of the shielding room.
2. The EUT was placed on a table which is 0.8m above ground plane.
3. Connect EUTto the power mains through a line impedance stabilization network (LISN). All other support equipmentspowered from additional LISN(s). The LISN provide 50 Ohm/ 50uH of coupling impedance for the measuring instrument.
4. Interconnecting cables that hang closer than 40 cm to the groundplane shall be folded back and forth in the center forming a bundle 30 to 40cm long.
5. I/O cables that are not connected to a peripheral shall be bundled in the center. The end of the cable may be terminated, if required, using the correct terminating impedance. The overall length shall not exceed 1 m.
6. LISN at least 80 cm from nearest part of EUT chassis.
7. The frequency range from 150KHz to 30MHz was searched.
8. Set the test-receiver system to Peak Detect Function and specified bandwidth(IF bandwidth=9KHz) with Maximum Hold Mode
9. For the actual test configuration, please refer to the related Item –EUT Test Photos

8.6Test Results

EUT：	Remote Control	Model Name ：	RCTGen2A4AIM
Temperature：	24℃	Relative Humidity：	50%
Pressure：	1010hPa	Phase：	L
Test Voltage：	DC 5V from Adapter AC 120V/60Hz	Test Mode：	Mode 1

Frequency (MHz)	Reading Level (dBμV)	Correct Factor (dB)	Measure-ment (dBμV)	Limits (dBμV)	Margin (dB)	Remark
0.1539	33.64	10.00	43.64	65.79	-22.15	QP
0.1539	21.84	10.00	31.84	55.79	-23.95	AVG
0.3860	21.33	10.47	31.80	58.15	-26.35	QP
0.3860	14.06	10.47	24.53	48.15	-23.62	AVG
1.5940	7.79	12.96	20.75	56.00	-35.25	QP
1.5940	-3.14	12.96	9.82	46.00	-36.18	AVG
3.0220	12.52	9.88	22.40	56.00	-33.60	QP
3.0220	0.69	9.88	10.57	46.00	-35.43	AVG
7.3980	23.51	10.45	33.96	60.00	-26.04	QP
7.3980	14.27	10.45	24.72	50.00	-25.28	AVG
16.9860	17.77	12.21	29.98	60.00	-30.02	QP
16.9860	8.30	12.21	20.51	50.00	-29.49	AVG

Remark:
1. All readings are Quasi-Peak and Average values.
2. Factor = Insertion Loss + Cable Loss.

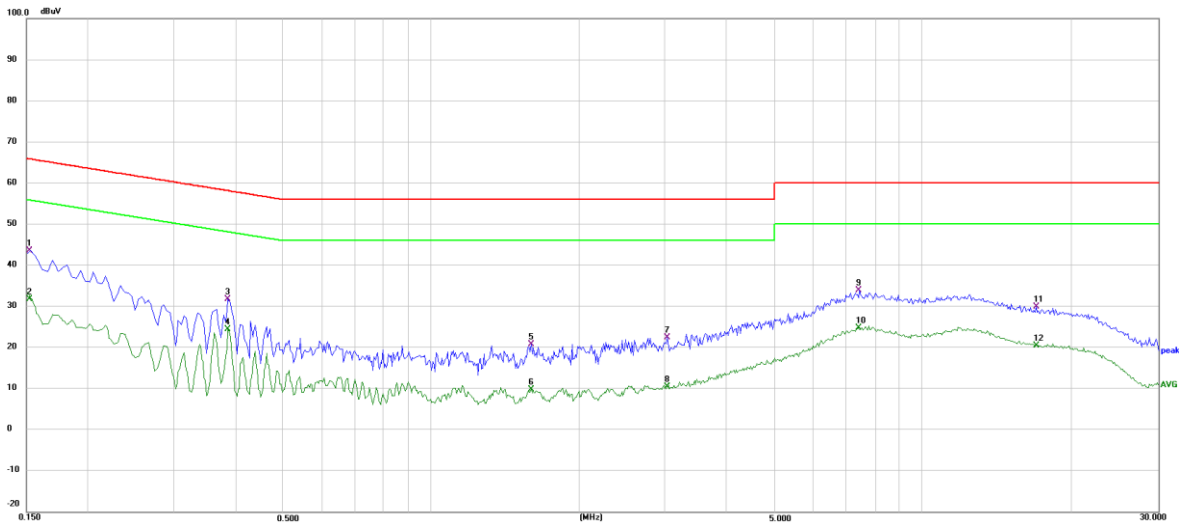

EUT：	Remote Control	Model Name ：	RCTGen2A4AIM
Temperature：	24℃	Relative Humidity：	50%
Pressure：	1010hPa	Phase：	N
Test Voltage：	DC 5V from Adapter AC 120V/60Hz	Test Mode：	Mode 1

Frequency (MHz)	Reading Level (dBμV)	Correct Factor (dB)	Measure-ment (dBμV)	Limits (dBμV)	Margin (dB)	Remark
0.1539	32.79	9.44	42.23	65.79	-23.56	QP
0.1539	18.31	9.44	27.75	55.79	-28.04	AVG
0.3860	19.70	9.85	29.55	58.15	-28.60	QP
0.3860	11.31	9.85	21.16	48.15	-26.99	AVG
0.5580	12.95	10.09	23.04	56.00	-32.96	QP
0.5580	5.27	10.09	15.36	46.00	-30.64	AVG
1.3380	9.71	11.71	21.42	56.00	-34.58	QP
1.3380	-0.61	11.71	11.10	46.00	-34.90	AVG
7.8380	23.37	9.72	33.09	60.00	-26.91	QP
7.8380	13.80	9.72	23.52	50.00	-26.48	AVG
12.9379	19.74	10.65	30.39	60.00	-29.61	QP
12.9379	11.56	10.65	22.21	50.00	-27.79	AVG

Remark:
1. All readings are Quasi-Peak and Average values.
2. Factor = Insertion Loss + Cable Loss.

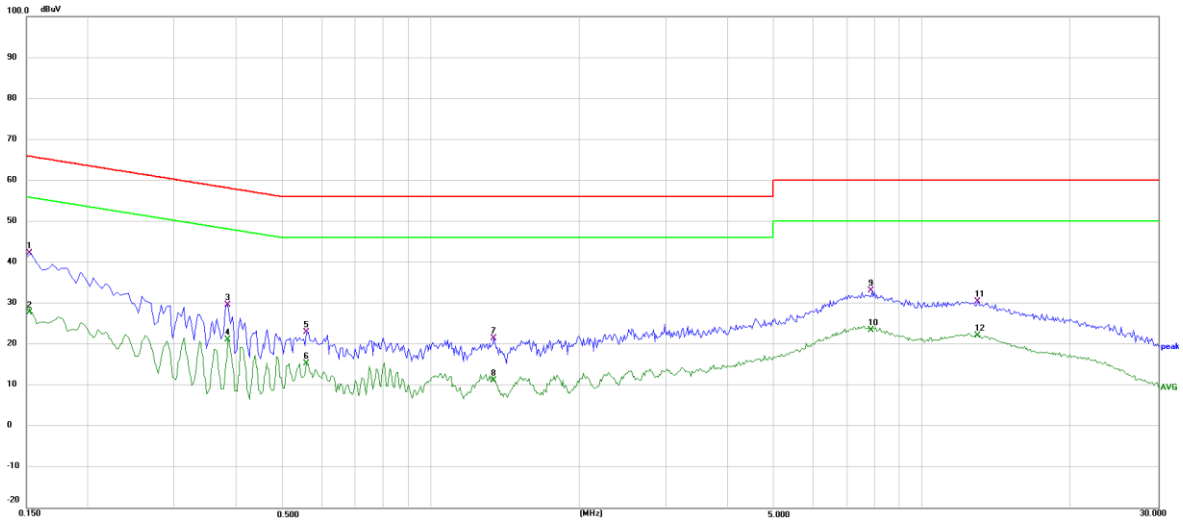

9. RADIATED EMISSION MEASUREMENT

9.1Applicable Standard

According to 15.209& 15.205 and ANSI C63.10-2013

9.2Radiated Emission Limits(FCC 15.209)

Frequencies (MHz)	Field Strength (micorvolts/meter)	Measurement Distance (meters)
0.009~0.490	2400/F(KHz)	300
0.490~1.705	24000/F(KHz)	30
1.705~30.0	30	30
30~88	100	3
88~216	150	3
216~960	200	3
Above 960	500	3

Note:

(1) The tighter limit applies at the band edges.

(2) Emission level (dBuV/m)=20log Emission level (uV/m).

(3) Measurement was performed at an antenna to the closed point of EUT distance of meters.

(4) For Frequency 9kHz~30MHz:
Distance extrapolation factor =40log(Specific distance/ test distance)(dB);
Limit line=Specific limits(dBuV) + distance extrapolation factor.
For Frequency above 30MHz:
Distance extrapolation factor =20log(Specific distance/ test distance)(dB);
Limit line=Specific limits(dBuV) + distance extrapolation factor.

According to FCC Part 15.205, Restricted bands:

MHz	MHz	MHz	GHz
0.090-0.110	16.42-16.423	399.9-410	4.5-5.15
0.495-0.505	16.69475-16.69525	608-614	5.35-5.46
2.1735-2.1905	16.80425-16.80475	960-1240	7.25-7.75
4.125-4.128	25.5-25.67	1300-1427	8.025-8.5
4.17725-4.17775	37.5-38.25	1435-1626.5	9.0-9.2
4.20725-4.20775	73-74.6	1645.5-1646.5	9.3-9.5
6.215-6.218	74.8-75.2	1660-1710	10.6-12.7
6.26775-6.26825	123-138	2200-2300	14.47-14.5
8.291-8.294	149.9-150.05	2310-2390	15.35-16.2
8.362-8.366	156.52475-156.52525	2483.5-2500	17.7-21.4
8.37625-8.38675	156.7-156.9	2690-2900	22.01-23.12
8.41425-8.41475	162.0125-167.17	3260-3267	23.6-24.0
12.29-12.293	167.72-173.2	3332-3339	31.2-31.8
12.51975-12.52025	240-285	3345.8-3358	36.43-36.5
12.57675-12.57725	322-335.4	3600-4400	(2)
13.36-13.41			

LIMITS OF RADIATED EMISSION MEASUREMENT (FCC 15.231)

Fundamental Frequency (MHz)	**Field Strength of fundamental (microvolts/meter)**	**Field Strength of Unwanted Emissions (microvolts/meter)**
40.66 - 40.70	2250.00	225.00
70 - 130	1250	125
130 - 174	1,250 to 3,750 **	125 to 375 **
174 - 260	3750.00	375.00
260 - 470	3,750 to 12500 **	375 to 1,250 **
Above 470	12500.00	1250.00

Notes:

(1) ** linear interpolations
[Where F is the frequency in MHz, the formulas for calculating the maximum permitted fundamental fieldstrengths are as follows: for the band 130-174 MHz, uV/m at 3 meters = 56.81818(F) - 6136.3636; forthe band 260-470 MHz, uV/m at 3 meters = 41.6667(F) - 7083.3333. The maximum permitted unwantedemission level is 20 dB below the maximum permitted fundamental level.]
The limits on the field strength of the spurious emissions in the above table are based on the fundamental frequency of the intentional radiator. Spurious emissions shall be attenuated to the average (or, alternatively, CISPR quasi-peak) limits shown in this table or to the general limits shown in 93 Section 15.209, whichever limit permits a higher field strength.

Spectrum Parameter	Setting
Attenuation	Auto
Start Frequency	1000 MHz
Stop Frequency	10th carrier harmonic
RB / VB (emission in restricted band)	1MHz / 1MHz for Peak

Receiver Parameter	Setting
Attenuation	Auto
Start ~ Stop Frequency	9kHz~150kHz / RB 200Hz for QP
Start ~ Stop Frequency	150kHz~30MHz / RB 9kHz for QP
Start ~ Stop Frequency	30MHz~1000MHz / RB 90kHz for QP

9.3 TEST PROCEDURE

The test site semi-anechoic chamber has met the requirement of NSA tolerance 4 dB according to the standards: ANSI C63.10-2013. The test distance is 3m.The setup is according to the requirements in Section 13.1.4.1 of ANSI C63.10-2013 and CAN/CSA-CEI/IEC CISPR 22.
This test is required for any spurious emission that falls in a Restricted Band, as defined in Section 15.205. It must be performed with the highest gain of each type of antenna proposed for use with the EUT.
Use the following spectrum analyzer settings:

Spectrum Parameter	Setting
Attenuation	Auto
Start Frequency	1000 MHz
Stop Frequency	10th carrier harmonic
RB / VB (emission in restricted band)	1MHz / 1MHz for Peak, 1 MHz / 10Hz for Average

Receiver Parameter	Setting
Attenuation	Auto
Start ~ Stop Frequency	9kHz~150kHz / RB 200Hz for QP
Start ~ Stop Frequency	150kHz~30MHz / RB 9kHz for QP
Start ~ Stop Frequency	30MHz~1000MHz / RB 120kHz for QP

a. The measuring distance of at 3 m shall be used for measurements at frequency up to 1GHz. For frequencies above 1GHz, any suitable measuring distance may be used.
b. The EUT was placed on the top of a rotating table 0.8 m for below 1GHz and 1.5m for above 1GHz the ground at a 3 meter. The table was rotated 360 degrees to determine the position of the highest radiation.
c. The height of the equipment or of the substitution antenna shall be 0.8 m for below 1GHz and 1.5m for above 1GHz; the height of the test antenna shall vary between 1 m to 4 m. Both horizontal and vertical polarizations of the antenna are set to make the measurement.
d. For the radiated emission test above 1GHz:
Place the measurement antenna away from each area of the EUT determined to be a source of emissions at the specified measurement distance, while keeping the measurement antenna aimed at the source of emissions at each frequency of significant emissions, with polarization oriented for maximum response. The measurement antenna may have to be higher or lower than the EUT, depending on the radiation pattern of the emission and staying aimed at the emission source for receiving the maximum signal. The final measurement antenna elevation shall be that which maximizes the emissions. The measurement antenna elevation for maximum emissions shall be restricted to a range of heights of from 1 m to 4 m above the ground or reference ground plane.
e. The initial step in collecting conducted emission data is a spectrum analyzer peak detector mode pre-scanning the measurement frequency range. Significant peaks are then marked and then Quasi Peak detector mode re-measured.
f. If the Peak Mode measured value compliance with and lower than Quasi Peak Mode Limit, the EUT shall be deemed to meet QP Limits and then no additional QP Mode measurement performed.
g. For the actual test configuration, please refer to the related Item –EUT Test Photos.

Note:

Both horizontal and vertical antenna polarities were tested
and performed pretest to three orthogonal axis. The worst case emissions were reported

During the radiated emission test, the Spectrum Analyzer was set with the following configurations:

Frequency Band (MHz)	Function	Resolution bandwidth	Video Bandwidth
30 to 1000	QP	120 kHz	300 kHz
Above 1000	Peak	1 MHz	1 MHz
	Average	1 MHz	10 Hz

Note: for the frequency ranges below 30 MHz, a narrower RBW is used for these ranges but the measured value should add a RBW correction factor (RBWCF) where RBWCF [dB] =10*lg(100 [kHz]/narrower RBW [kHz]). , the narrower RBW is 1 kHz and RBWCF is 20 dB for the frequency 9 kHz to 150 kHz, and the narrower RBW is 10 kHz and RBWCF is 10 dB for the frequency 150 kHz to 30 MHz.

9.4 TEST SETUP

（A）For radiated emissionsbelow 30MHz

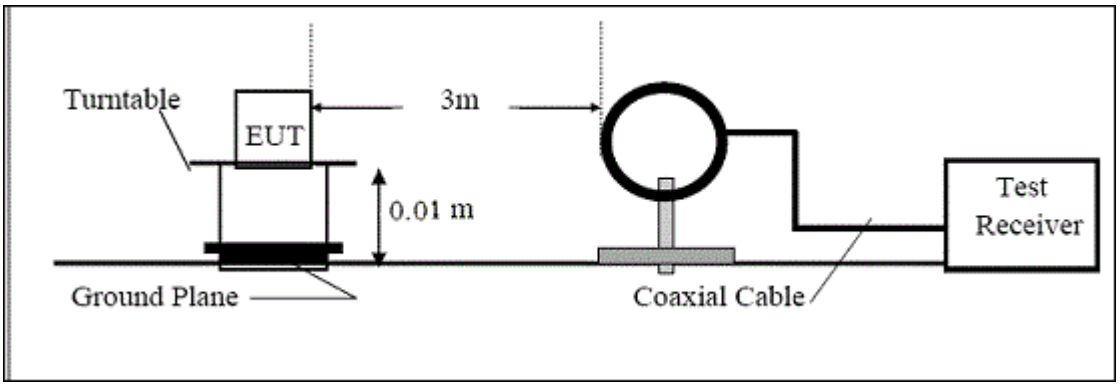

（B）For radiated emissionsfrom 30MHz to 1000MHz

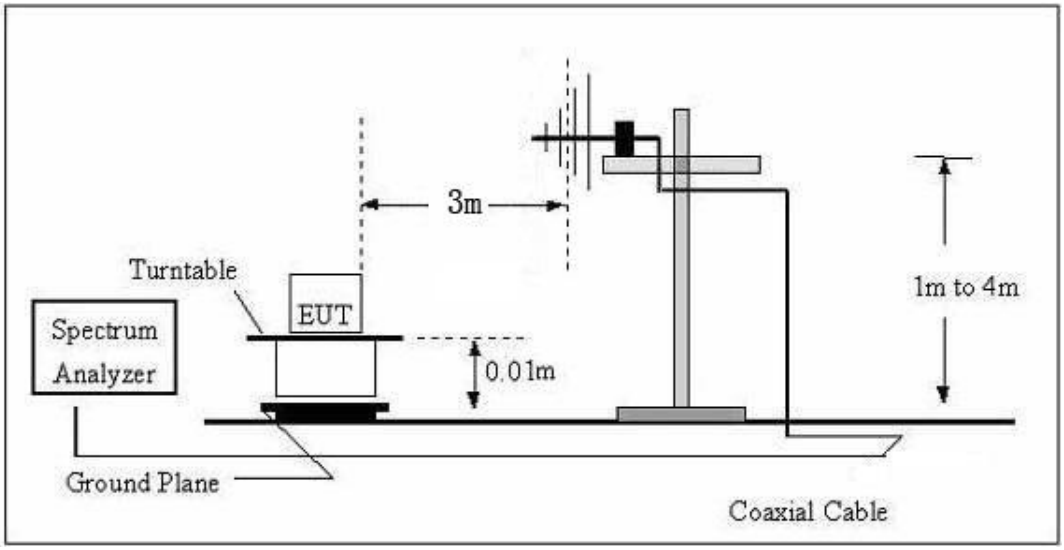

（C）For radiated emissions above 1000MHz

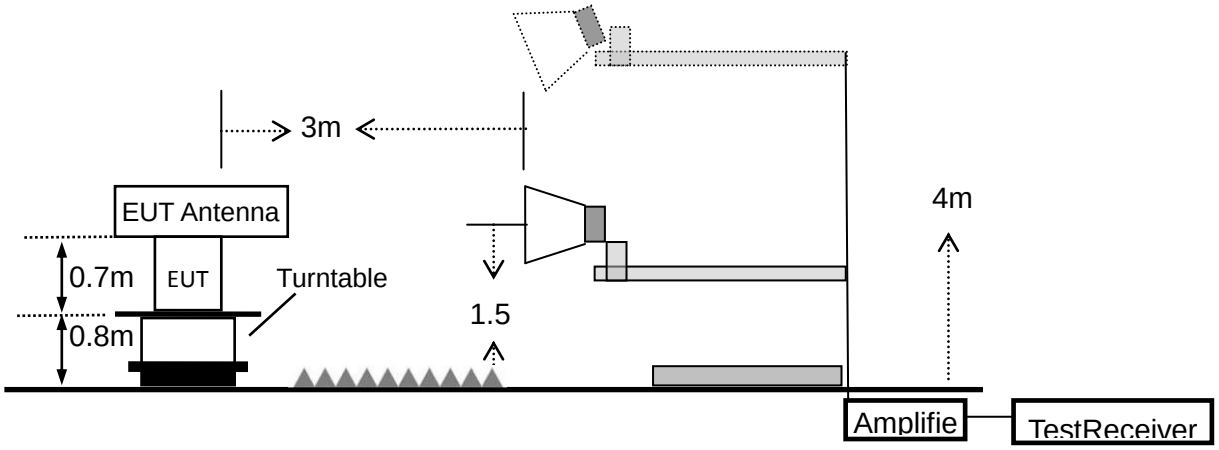

Note:the antenna of the EUT was located at a height of 1.5 m above the floor.

9.5 TEST RESULTS

■ Emission below 30MHz (9KHz to 30MHz)

EUT:	Remote Control	Model No.:	RCTGen2A4AIM
Temperature:	20 ℃	Relative Humidity:	48%
Test Mode:	Mode1	Test By:	Kieron Luo

Freq. (MHz)	Ant.Pol. H/V	Emission Level(dBuV/m)		Limit 3m(dBuV/m)		Over(dB)	
		PK	AV	PK	AV	PK	AV
--	--	--	--	--	--	--	--

Note: the amplitude of spurious emission that is attenuated by more than 20dB below the permissible limit has no need to be reported.

■ Emission below 1GHz(30MHz to 1GHz)

All the modulation modes have been tested, and the worst result was report as below:

EUT：	Remote Control	Model Name ：	RCTGen2A4AIM
Temperature：	25.1 ℃	Relative Humidity：	53%
Pressure：	1010hPa	Test Mode：	Mode 1
Test Voltage：	DC 3.7V		

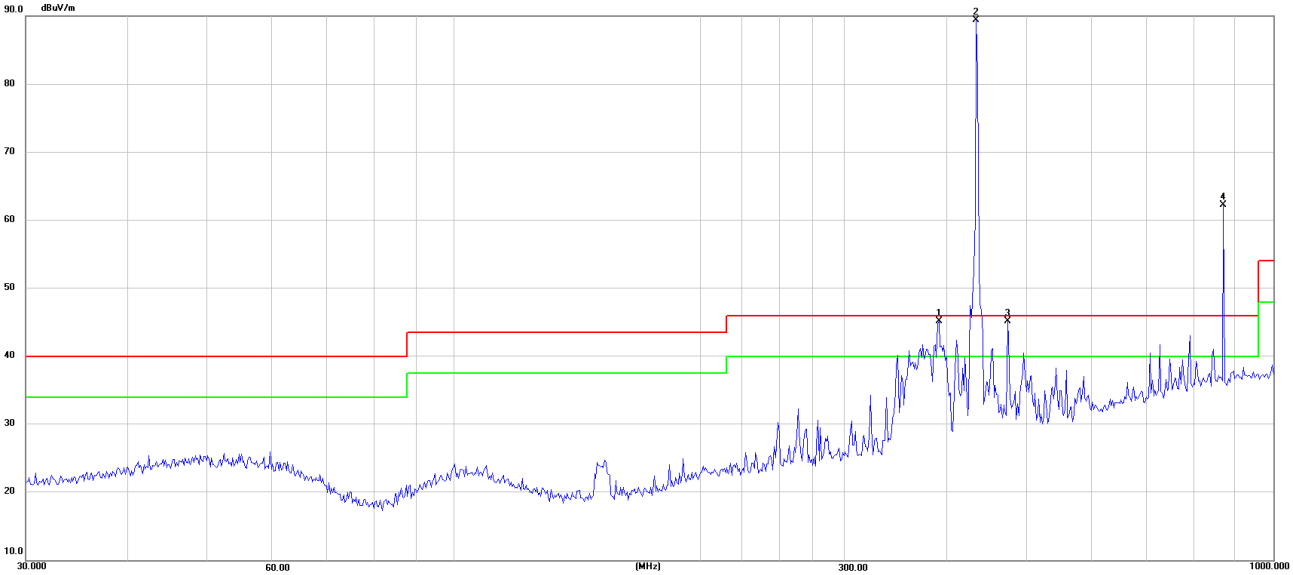

Polar (H/V)	Frequency (MHz)	Reading (dBuV/m)	Correct dB/m	Result (dBuV/m)	Limit (dBuV/m)	Over Limit (dB)	Remark
H	390.7225	22.43	22.75	45.18	60.83	-15.65	peak
H	434.0000	65.87	23.52	89.39	100.83	-11.44	peak
H	434.0000	-	-	79.36	80.83	-1.47	AVG
H	473.8346	21.10	24.13	45.23	60.83	-15.60	peak
H	868.0000	31.56	30.64	62.20	80.83	-18.63	peak
H	868.0000	-	-	52.17	60.83	-8.66	AVG

Note: The average value of fundamental frequency is:

Average= Peak Value+ 20log(Duty cycle), Final Average=Peak-10.03

EUT：	Remote Control	Model Name ：	RCTGen2A4AIM
Temperature：	25.1 ℃	Relative Humidity：	53%
Pressure：	1010hPa	Test Mode：	Mode 1
Test Voltage：	DC 3.7V		

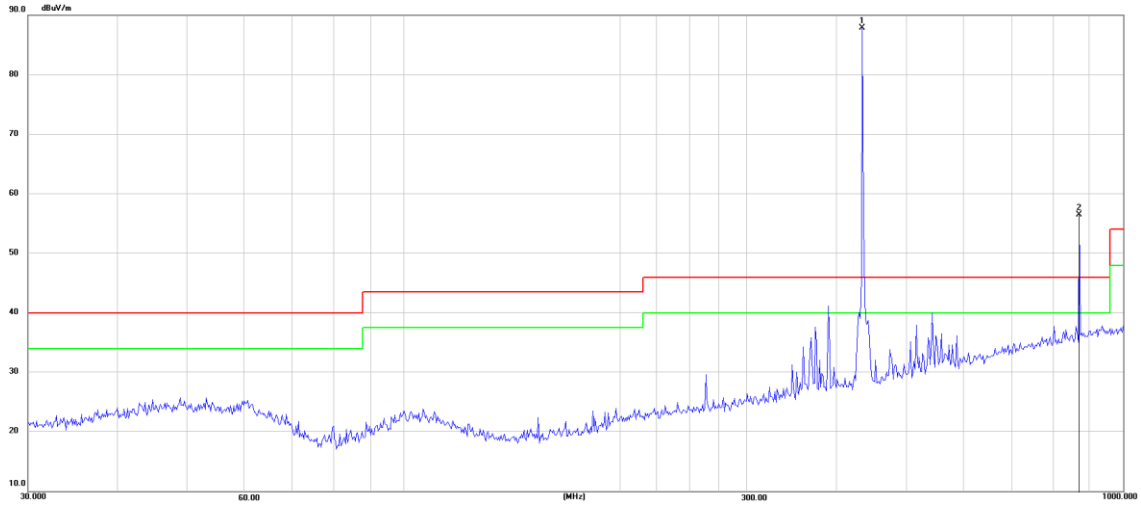

Polar (H/V)	Frequency (MHz)	Reading (dBuV/m)	Correct dB/m	Result (dBuV/m)	Limit (dBuV/m)	Over Limit (dB)	Remark
V	434.0000	64.33	23.52	87.85	100.83	-12.98	Peak
V	434.0000	-	-	77.82	80.83	-3.01	AVG
V	868.0000	25.86	30.64	56.50	80.83	-24.33	Peak
V	868.0000	-	-	46.47	60.83	-14.36	AVG

Note: The average value of fundamental frequency is:
Average= Peak Value+ 20log(Duty cycle), Final Average= Peak-10.03

■ Emission Above 1GHz (1GHz to 18GHz)

EUT :	Remote Control	Model Name :	RCTGen2A4AIM
Temperature :	20 ℃	Relative Humidity :	48%
Pressure :	1010hPa	Test Voltage :	DC 3.7V
Test Mode :	Mode 1	Polarization :	Horizontal

No.	Frequency (MHz)	Reading (dBuV/m)	Correct Factor (dB)	Dutycycle Factor (dB)	Result (dBuV/m)	Limit (dBuV/m)	Over Limit (dB)	Remark
1	1302.000	67.97	-22.93	-	45.04	74	-28.96	Peak
2	1736.000	69.69	-22.16	-	47.53	80.83	-33.30	Peak
3	2170.000	81.33	-19.32	-	62.01	80.83	-18.82	Peak
4	2603.520	77.03	-17.73	-	59.30	80.83	-21.53	Peak
5	3037.440	68.64	-15.66	-	52.98	80.83	-27.85	Peak
6	3471.360	59.11	-15.74	-	43.37	80.83	-37.46	Peak
7	3905.280	62.07	-14.93	-	47.14	80.83	-33.69	Peak
8	1302.000	-	-	-10.03	37.64	54	-16.36	AVG
9	1736.000	-	-	-10.03	43.87	60.83	-16.96	AVG
10	2170.000	-	-	-10.03	50.63	60.83	-10.20	AVG
11	2603.520	-	-	-10.03	45.26	60.83	-15.57	AVG
12	3037.440	-	-	-10.03	47.04	60.83	-13.79	AVG

EUT :	Remote Control	Model Name :	RCTGen2A4AIM
Temperature :	20 ℃	Relative Humidity :	48%
Pressure :	1010hPa	Test Voltage :	DC 3.7V
Test Mode :	Mode 1	Polarization :	Vertical

No.	Frequency (MHz)	Reading (dBuV/m)	Correct Factor (dB)	Dutycycle Factor (dB)	Result (dBuV/m)	Limit (dBuV/m)	Over Limit (dB)	Remark
1	1302.000	70.60	-22.93	-	47.67	74	-26.33	Peak
2	1736.000	76.06	-22.16	-	53.90	80.83	-26.93	Peak
3	2170.000	79.98	-19.32	-	60.66	80.83	-20.17	Peak
4	2603.520	73.02	-17.73	-	55.29	80.83	-25.54	Peak
5	3037.440	72.73	-15.66	-	57.07	80.83	-23.76	Peak
6	3471.360	59.31	-15.74	-	43.57	80.83	-37.26	Peak
7	1302.000	-	-	-10.03	35.01	54	-18.99	AVG
8	1736.000	-	-	-10.03	37.50	60.83	-23.33	AVG
9	2170.000	-	-	-10.03	51.98	60.83	-8.85	AVG
10	2603.520	-	-	-10.03	49.27	60.83	-11.56	AVG
11	3037.440	-	-	-10.03	42.95	60.83	-17.88	AVG
12	3471.360	-	-	-10.03	33.34	60.83	-27.49	AVG

Note: that all other emissions above 1GHz are attenuated 30dB below the limit, so it does not record

Note: 1. EUT Pre-scan X/Y/Z orientation, only worst case is presented in the report(Y orientation).

2. *Calculate Average value based on Duty Cycle correction factor:

Ton=31.40ms;

T=99.40ms

Duty Cycle=Ton/T =（31.40/99.60)/100=0.3333=31.53%

Duty Cycle factor= 20log (Duty Cycle) =20log (0.3153) = -10.03

Average=Peak+ Duty Cycle factor

2. FCC Limit for Average Measurement = 41.6667(434)-7083.3333= 11000.0145uV/m =80.83dBuV/m

3. Pulse Desensitization Correction Factor

Pulse Width(PW)=100ms 2/PW=2/100ms=0.02kHz

RBW(100kHz)＞2/PW (0.024kHz),

Therefore PDCF is not needed.

Duty Cycle:

The duty cycle is simply the on time divided by the period:

The duration of one cycle = 99.60ms

Effective period of the cycle =31.40ms,

Duty Cycle =31.40ms/99.60ms=0.3153=31.53%

Test Plot For Duty cycle

(**Duty cycle**)$T_{ON(one\ hop)}$

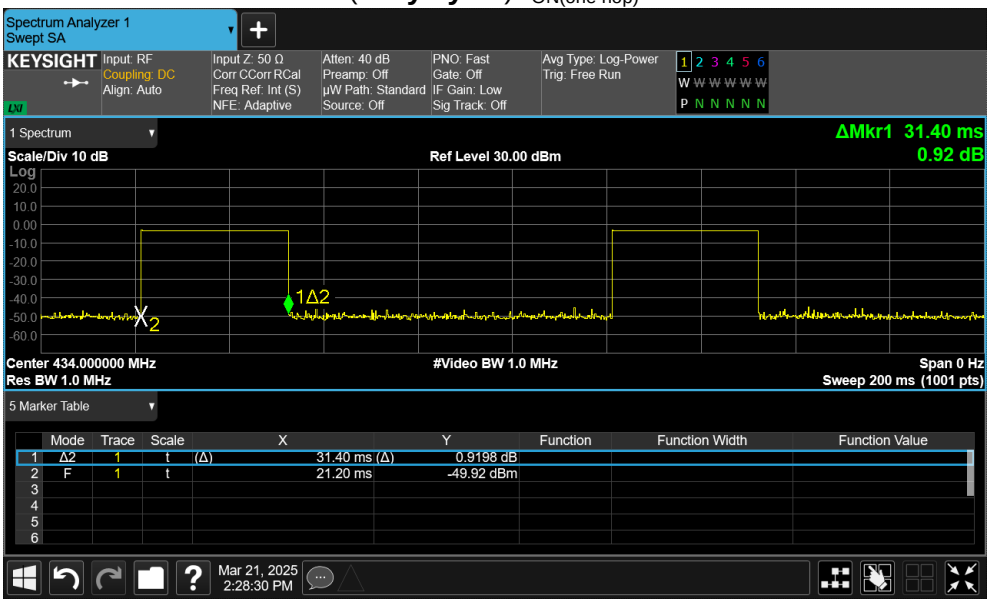

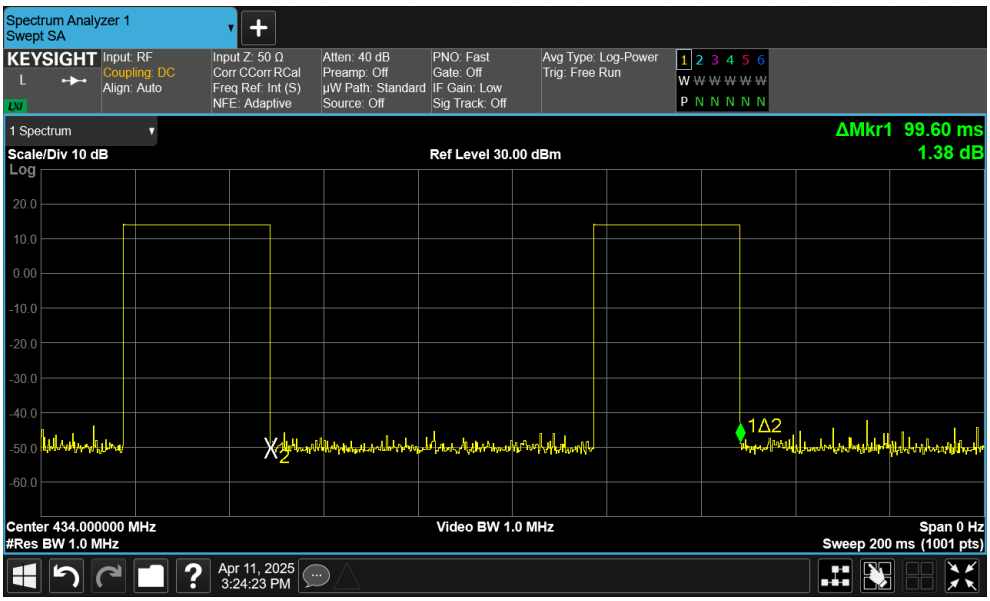

10. BANDWIDTH TEST

10.1 TEST PROCEDURE

The bandwidth of the emission shall be no wider than 0.25% of the center frequency for devices operating above 70 MHz and below 900 MHz. For devices operating above 900 MHz, the emission shall be no wider than 0.5% of the center frequency. Bandwidth is determined at the points 20 dB down from the modulated carrier.
Limit: 434MHz*0.25%=1085KHz

10.2 DEVIATION FROM STANDARD

No deviation.

10.3 TEST SETUP

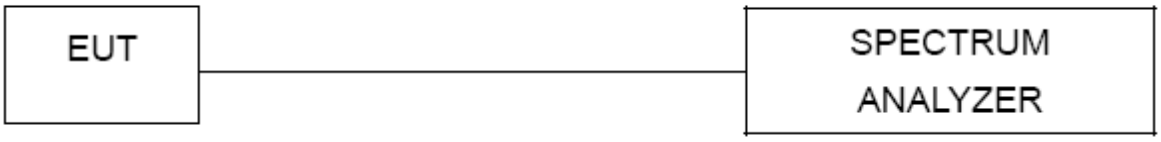

10.4 TEST RESULTS

EUT :	Remote Control	Model Name :	RCTGen2A4AIM
Temperature :	26℃	Relative Humidity :	53%
Pressure :	1020hPa	Test Power :	DC 3.7V
Test Mode :	TX CH 1		

Test Channel	Frequency (MHz)	20 dBc Bandwidth (kHz)	<Limit (kHz)
CH01	434	300.3	1085

11. TRANSMITTER TIMEOUT

11.1 REQUIREMENTS

1	A manually operated transmitter shall employ a switch that will automatically deactivate the transmitterwithin not more than 5 seconds of being released. **Result:**The EUT is a manually activated transmitter, press 5 seconds will automatically stop working
2	A transmitter activated automatically shall cease transmission within 5 seconds after activation. **Result:**The EUT is a manually activated transmitter, press 5 seconds will automatically stop working
3	Periodic transmissions at regular predetermined intervals are not permitted. However, polling orsupervision transmissions, including data, to determine system integrity of transmitters used in security orsafety applications are allowed if the total duration of transmissions does not exceed more than twoseconds per hour for each transmitter. There is no limit on the number of individual transmissions,provided the total transmission time does not exceed two seconds per hour **Result:**The EUT does not employ periodic transmission.
4	Intentional radiators which are employed for radio control purposes during emergencies involving fire,security, and safety of life, when activated to signal an alarm, may operate during the pendency of thealarm condition. **Result:**The section is not applicable to EUT.

Test data

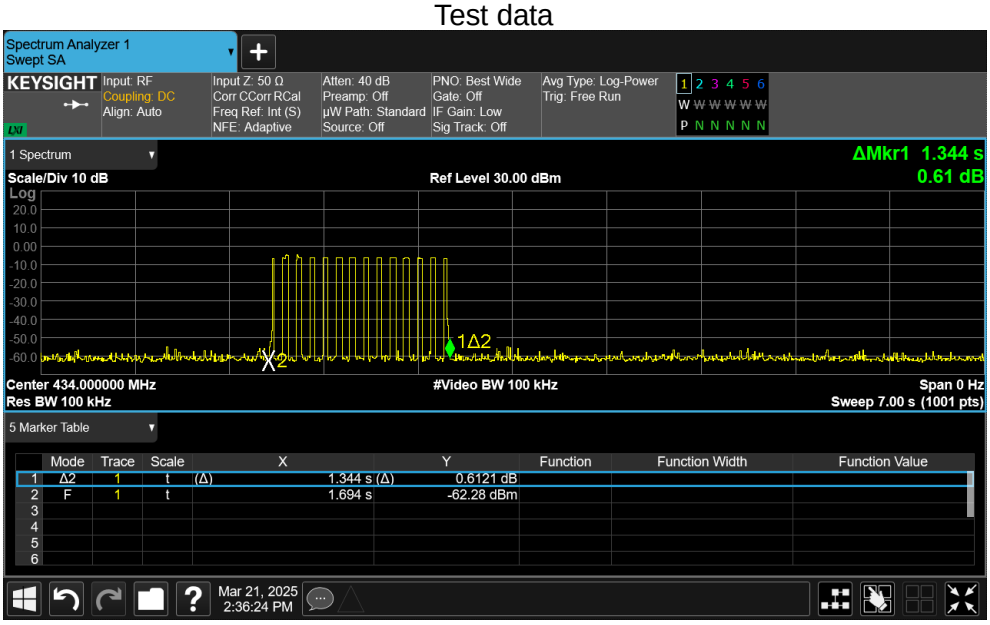

THE DURATION OF EACH TRANSMISSION (S)	LIMIT (S)	RESULT
1.344	<5	PASS

END OF REPORT