ISO9001 & ISO14001 & TS16949 **CHILISIN ELECTRONICS CORP.**

Lead-Free & RoHs Compliance!!

SPECIFICATION FOR APPROVAL

CUSTOMER：

CUSTOMER P/N：

OUR DWG No：

QUANTITY： **Pcs.** **DATE：** **2019/5/13**

ITEM： **BTCA00321608002G4E**

SPECIFICATION ACCEPTED BY:	
COMPONENT ENGINEER	
ELECTRICAL ENGINEER	
MECHANICAL ENGINEER	
APPROVED	
REJECTED	

奇力新電子股份有限公司
Chilisin Electronics Corp
No. 29, Alley 301, Tehhsin Rd.,
Hukou,Hsinchu 303, Taiwan
TEL：+886-3- 599-2646
FAX：+886-3- 599-9176
E-mail：sales@chilisin.com
http：//www.chilisin.com

東莞奇力新電子有限公司
Chilisin Electronics (Dongguan) Co., Ltd.
No. 78, Puxing Rd., Yuliangwei Administration
Area, Qingxi Town, Dongguan City,
Guangdong,China
TEL：+86-769-8773-0251~3
FAX： +86-769-8773-0232
E-mail：cect@chilisin.com

奇力新電子(河南)有限公司
Chilisin Electronics (Henan) Co., Ltd.
XiuWu Xian, industry gathering area
JiaoZuo, Henan China
Postal Code:454350
TEL:+86-391-717-0682
FAX:+86-391-717-0666

蘇州奇益新電子有限公司
SUZHOU QI YIXIN Electronics Co., Ltd.
No.143,Song Shan Rd., Suzhou New District,
Suzhou,China
Postal Code:215129
TEL:+86-512-6841-2350
FAX:+86-512-6841-2356

DRAWN BY	CHECKED BY	APPROVED BY
施友程 Robert.Shih	施友程 Robert.Shih	曲長文 Wen.Chu

Chip Series Specification

1 Scope: This specification applies to Chip series antenna

2 Part Numbering: Product Identification

B	TCA	□□	3216	□□□□	□□□	C
(1)	(2)	(3)	(4)	(5)	(6)	(7)

(1)Grade
(2)Product Series
(3)Control Code
(4)Dimensions
(5)Internal Code
(6)Frequency
(7)Version Code

3 Rating:

Operating Temperature: −25 ℃ ~ 125 ℃

Storage Temperature: ２０℃～２５℃ **R.H.** ６５％ **(For Referance)**

4 Marking:

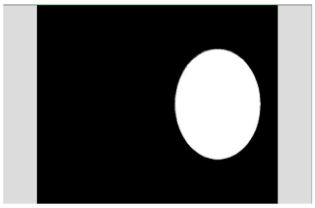

5 Standard Testing Condition:

	Unless otherwise specified	In case of doubt
Humidity	Ordinary Humidity(25 to 85% RH)	60 to 70 % RH
Temperature	Ordinary Temperature(15 to 35℃)	20±2℃

Chip Series Specification

6 Configuration and Dimensions:

Figure	Dimensions(mm)	
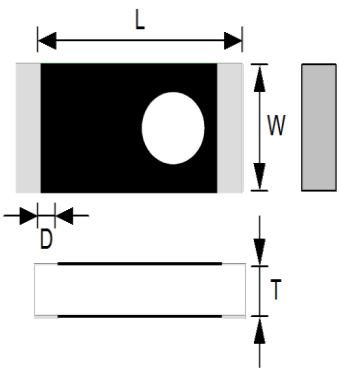	L	3.2±0.2
	W	1.6±0.2
	D	0.5±0.2
	T	0.5±0.2

TERMINAL CONFIGURATION

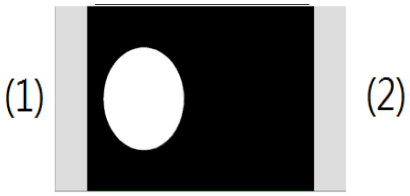

(1) Feed Termination
(2) Solder Termination

7 Electrical Characteristics:

Part No.	Impedance (Ω)	Test Freq. (GHz)	Bandwidth* (MHz)	Peak Gain* (dBi)	VSWR (max)	Polarization (Linear)
BTCA00321608002G4E	50	2.4	100	2.0	2	Linear

NOTE: *Depend on PCB layout.

Chip Series Specification

Return Loss

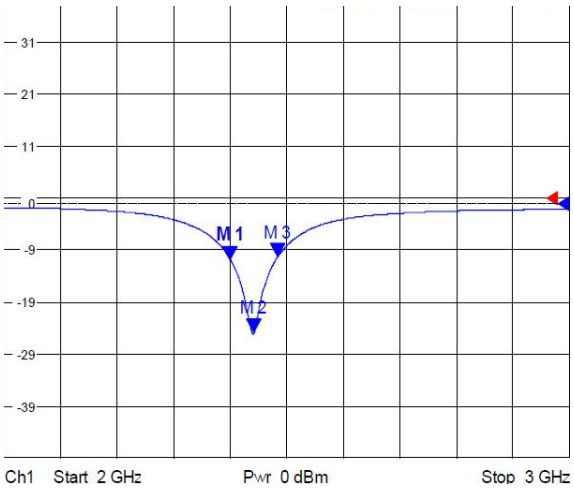

Frequency(MHz)	Gain (dBi)
2400	1.77
2450	2.00
2500	1.24

Radiation

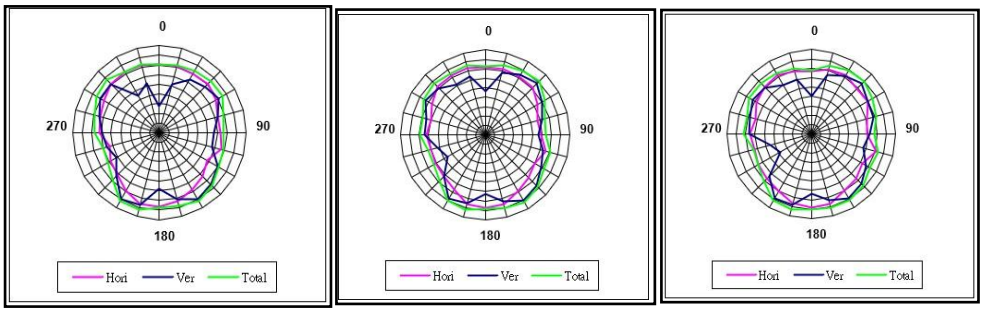

	2400MHz	2450MHz	2500MHz
Efficiency	70.56%	75.25%	71.01%

NOTE: ***Depend on PCB layout.**

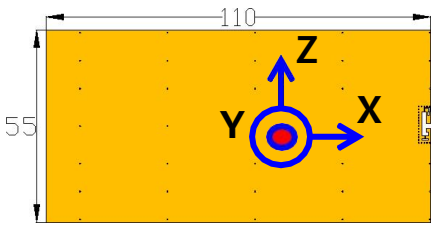

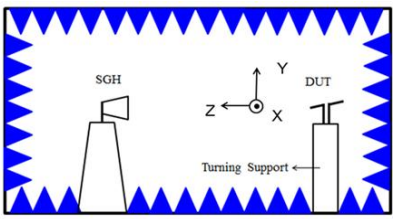

Chip Series Specification

8 Dimensions and Recommended PC Board Pattern:

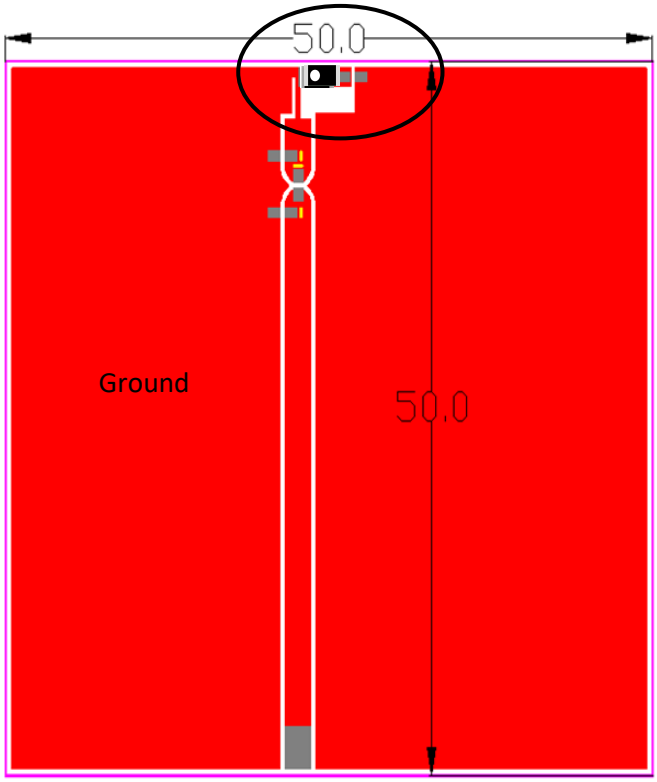

NOTE：Dimensions in mm

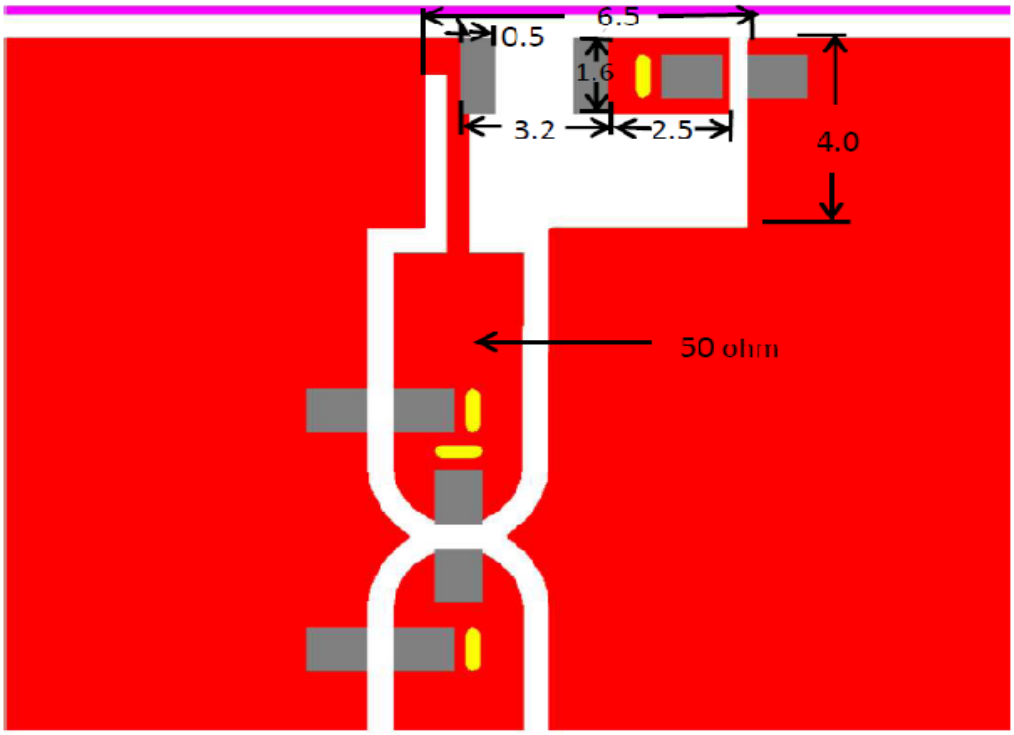

Chip Series Specification

9 Matching Circuit:

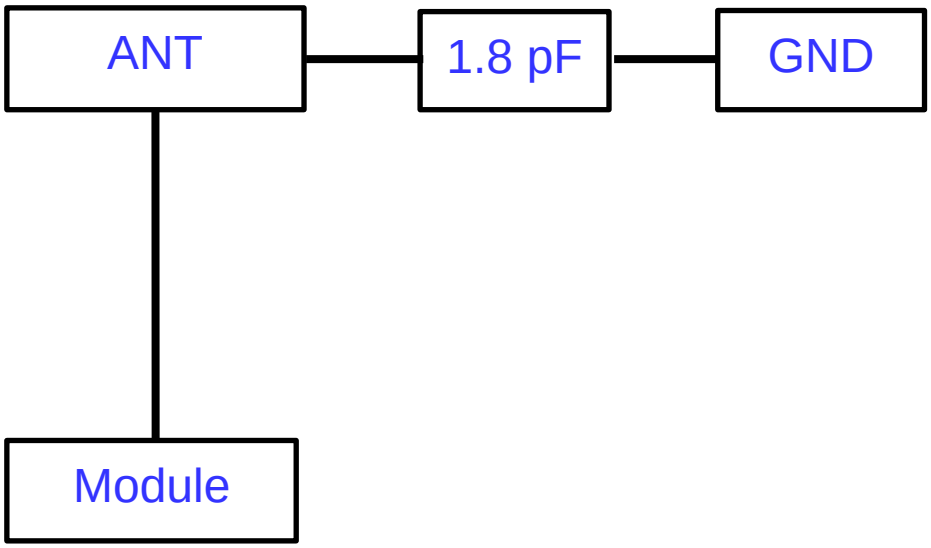

Return Loss

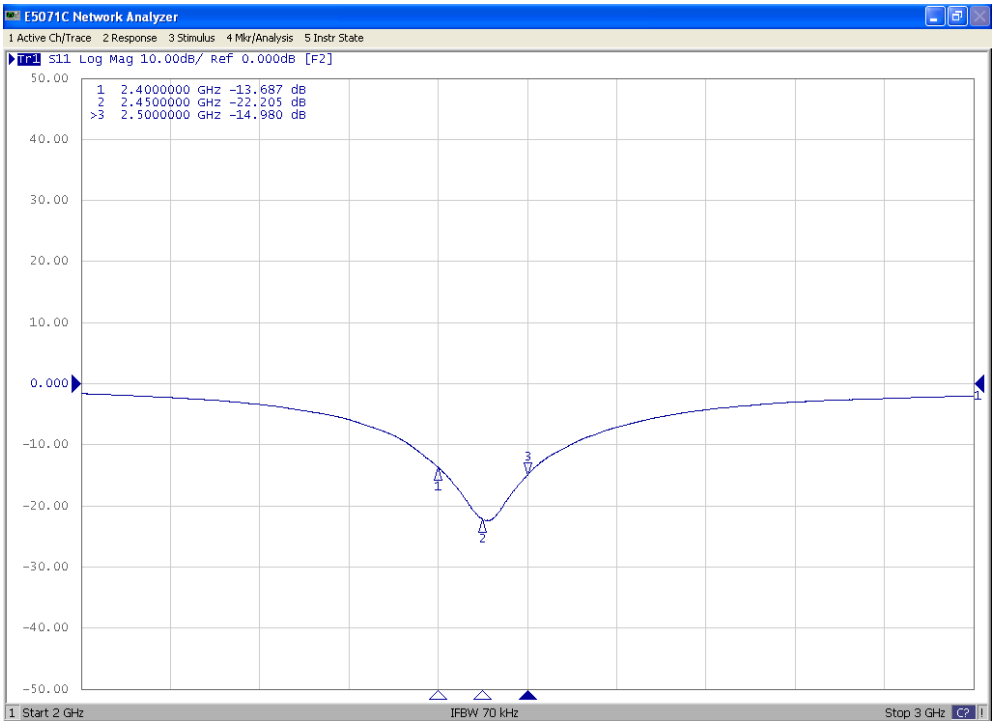

Chip Series Specification

10 Reliability Of Ferrite Multilayer Chip Bead

1-1.Mechanical Performance

No	Item	Specification	Test Method
1-1-1	Board Flex	The forces applied on the right conditions must not damage the terminal electrode and the ferrite	Test device shall be soldered on the substrate Substrate Dimension: 100x40x1.6mm Deflection: 2.0mm Keeping Time: 60 sec 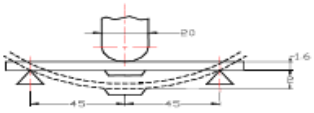
1-1-2	Resistance to Soldering Heat	Meet the electrical Specification after test	Refer to MIL-STD-202 Method 210 Pre-heating: 150-200℃, 60-100 sec Above 217℃ , 60-150 secs Peak Temperature: 260±5℃ , 20-40 sec Cycles : 2 times
1-1-3	Solder ability	The electrodes shall be at least 95% covered with new solder coating	Refer to J-STD-002 Pre-heating: 150℃, 1min Solder Composition: Sn/Ag3.0/Cu0.5(Pb-Free) Solder Temperature: 245±5℃(Pb-Free) Immersion Time: 4±1sec
1-1-4	Terminal Strength Test	The chip must not damage the terminal electrode and the ferrite	Test device shall be soldered on the substrate Force 2N for 60±1 seconds for 0603 series Force 5N for 60±1 seconds for 1005 series Force 10N for 60±1 seconds for 1608 series Force 1.8Kg for 60±1 seconds for the other series. 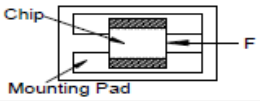
1-1-5	Vibration Test	Meet the electrical Specification after test	Refer to MIL-STD-202 Method 204 Vbration waveform: Sine waveform Vibration frequency: 10Hz~2000Hz Vibration acceleration: 5g 10Hz~20KHz and back to 10Hz should be down in 20 minutes Duration of test: 12 cycles each of 3 orientations, 20 minutes for each cycle, 12 hr total Vibration axes: X, Y & Z
1-1-6	Resistance to Solvent	There must be no change in appearance or obliteration of marking	Refer to MIL-STD-202 Method 215 Inductors must withstand 6 mimutes of alcohol or water.

Chip Series Specification

10 Reliability Of Ferrite Multilayer Chip Bead

1-2.Environmental Performance

No	Item	Specification	Test Method
1-2-1	Temperature Cycle	Meet the electrical Specification afer test	Refer to JESD Method JA-104 Total cycles: 1000 cycles 30 minutes exposure to -40℃ 30 minutes exposure to 125℃ 1 min. maximum transition between temperatures Measured after exposure in the room condition for 24hrs
1-2-2	Biased Humidity Resistance		Refer to MIL-STD-202 Method 103 Temperature: 85±2℃ Relative Humidity:85% / Time: 1000hrs Measured after exposure in the room condition for 24hrs
1-2-3	High Temperature Exposure (Storage)		Refer to MIL-STD-202 Method 108 Temperature: 125±3℃ / Relative Humidity: 0% Time: 1000hrs Measured after exposure in the room condition for 24hrs
1-2-4	Low Temperature Exposure (Storage)	Meet the electrical Specification after test	Refer to MIL-STD-202 Method 108 Temperature: -40±3℃ / Relative Humidity : 0% Applied Current: Rated Current/ Time: 1000hrs Measured after exposure in the room condition for 24 hrs

Chip Series Specification

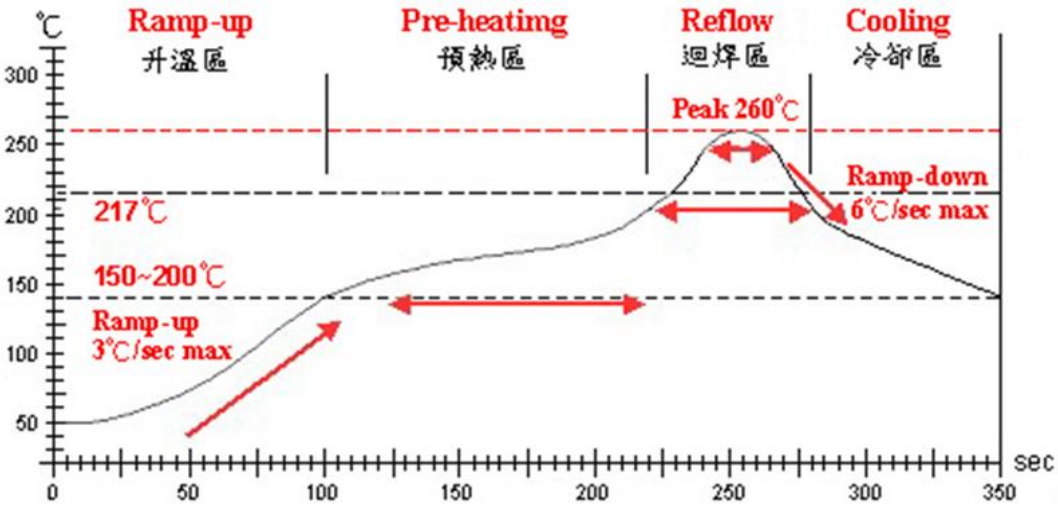

Reflow profile

Lead-Free(LF) 標準溫度分析範圍 Refer to J-STD-020C

管制項目 Item.	升溫區 Ramp-up	預熱區 Pre-heating	迴焊區 Reflow	Peak Temp	冷卻區 Cooling
溫度範圍 Temp.scope	R.T.~150℃	150℃~200℃	217℃	260±5℃	Peak Temp.~150℃
標準時間 Time spec.	—	60 ~ 180 sec	60 ~ 150 sec	20 ~ 40 sec	—
實際時間 Time result	—	75 ~ 100 sec	90 ~ 120 sec	20 ~ 35 sec	—

NOTE :

1. Re-flow possible times : within 2 times
2. Nitrogen adopted is recommended while in re-flow

Chip Series Specification

11 Packaging:

11.1 Packaging - Cover tape

The force for tearing off cover tape is 10 to 60 grams in the arrow direction.

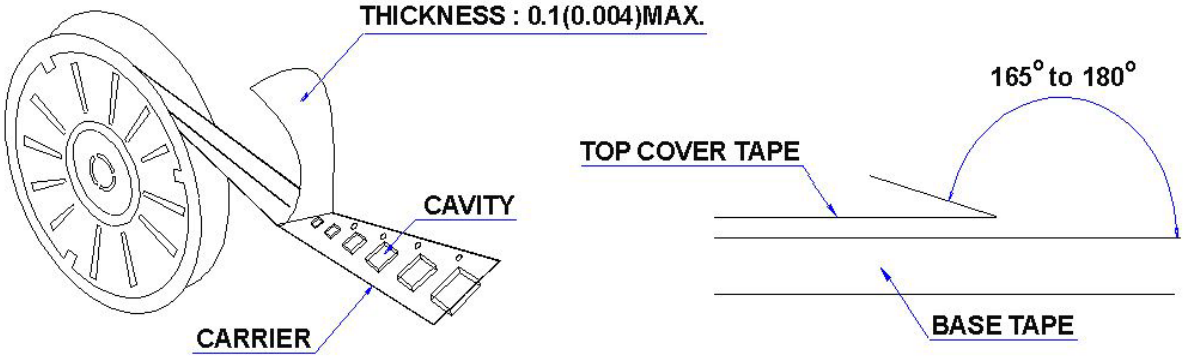

11.2 Packaging Quantity

TYPE	BULK	PCS/REEL
BTCA321605	X	5000

11.3 Reel Dimensions in mm

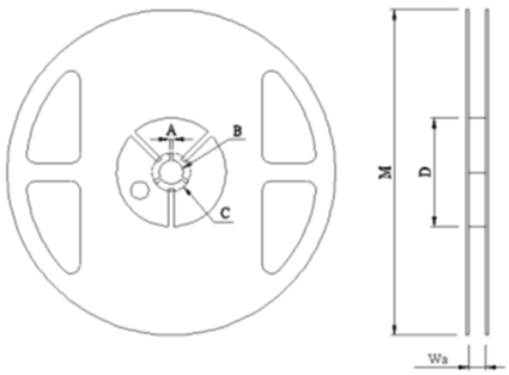

Unit: mm

Reel Type / Tape	W	M	A	B	C	D
7" reel for 8 mm tape	12.00± 0.5	178 ± 1.0	2.0 ± 0.5	13.2 ± 0.5	17.7 ± 0.5	60.0 ± 1.0

Chip Series Specification

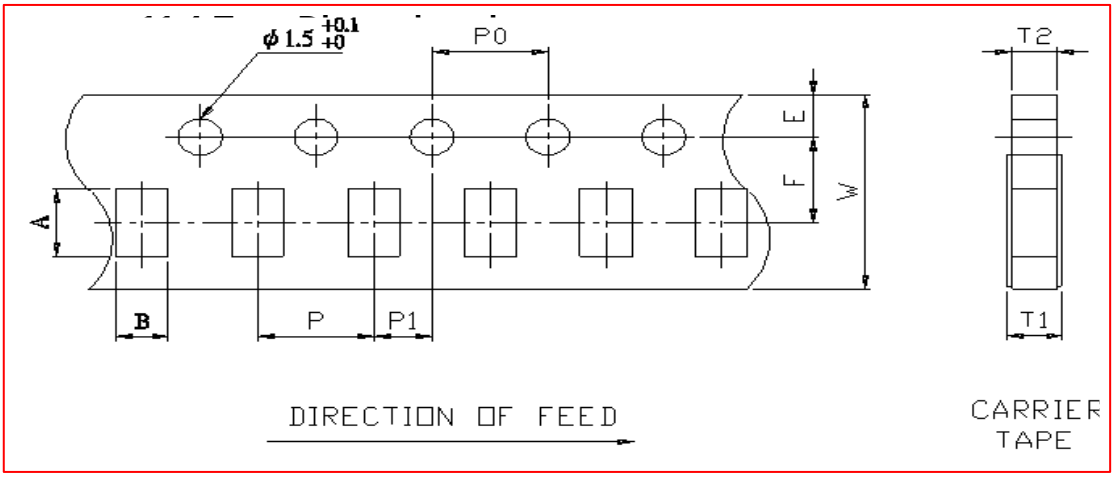

Unit: mm

Item \ DIM	A	B	W	E	F	T1	T2	P	P0	10*P0	P1
BTCA321605	3.50±0.20	1.90±0.20	8.0±0.20	1.75±0.10	3.5±0.05	0.75+0.2/-0	0.75±0.10	4.0±0.10	4.0±0.10	40.0±0.20	2.0±0.05

Note: The moisture sensitivity level (MSL) of products is classified as level 1.