# AI Smart Voice Recorder

## X1

# Statement

The products and information provided in this manual are for reference only and are subject to change without prior notice.Notification, but also does not rule out the possibility of content being updated at any time.

## 1. Product Parameters

| | |
|---|---|
| Memory storage | 64GB |
| Battery capacity | 210mAh |
| Interface | Type-C (data transmission/charging) |
| Button | Toggle the rebound button |
| LED indicator light | RGB |

## 2. Product introduction

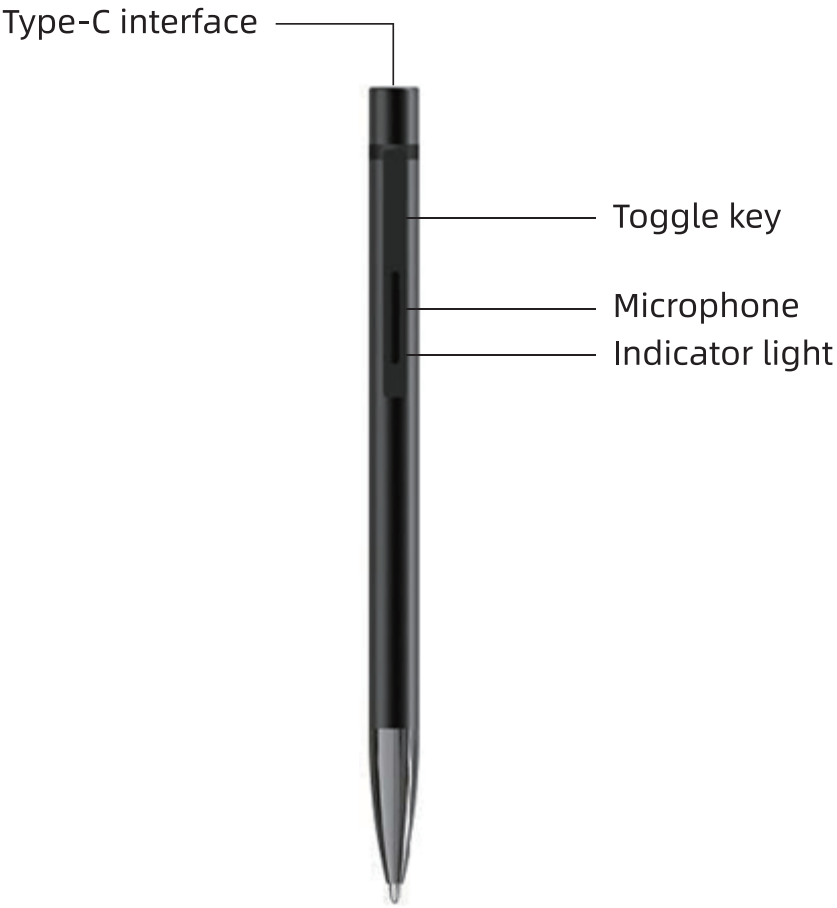

## 3.Instructions for use

### Power on:

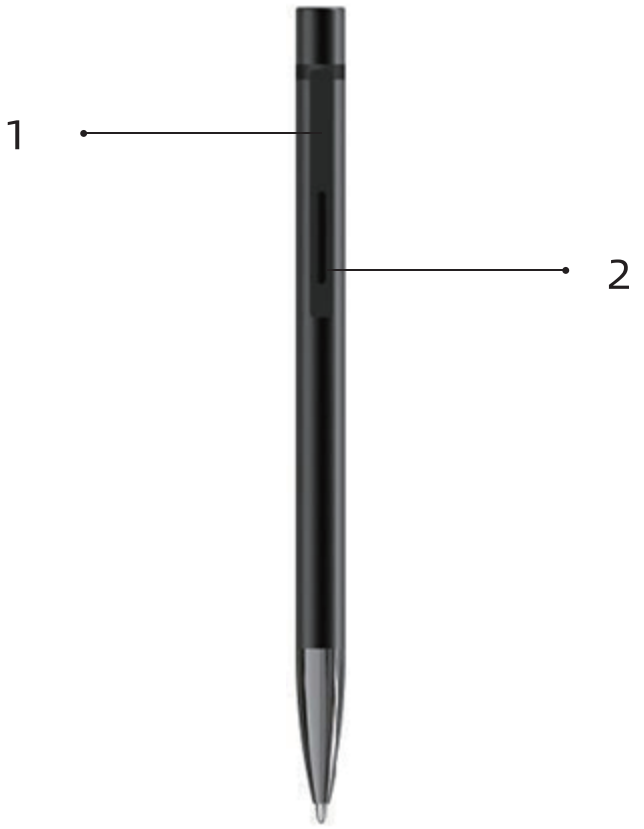


1. Press the rebound button for 3 seconds to turn on the device

2. After powering on, the indicator light is long blue

# Name and content of harmful substances in products

| Part name | Hazardous substances | | | | | |
|---|---|---|---|---|---|---|
| | Pb | Hg | Cd | Cr(VI) | PBB | PBDE |
| Housing and components | ○ | ○ | ○ | ○ | ○ | ○ |
| PCBA | × | ○ | ○ | ○ | ○ | ○ |
| Battery | ○ | ○ | ○ | ○ | ○ | ○ |
| Speaker | ○ | ○ | ○ | ○ | ○ | ○ |

This table is prepared in accordance with the provisions of SJIT11364

means that the content of the hazardous substance in all homogeneous materials of this component is below the limit requirement specified in GBIT 26572.

○ means that the content of the hazardous substance in at least one homogeneous material of the component exceeds the limit requirement specified in GBIT 26572.

×

The labeling period refers to the period (ten years) during which the hazardous substances in the electrical and electronic products will not leak out or mutate under normal use, and the use of the electronic information products by users will not cause serious pollution to the environment or serious damage to their personal and property.

## 4. Accessories list

| | |
|---|---|
| Host | 1 stick |
| Manual | 1 copy |
| USB adapter cable | 1 item |
| Refill | 10 sticks |

### Certificate

Inspector:_____

Production date:_____

Date:2024.12

Version:1.0

## 3.Instructions for use

### Recording:

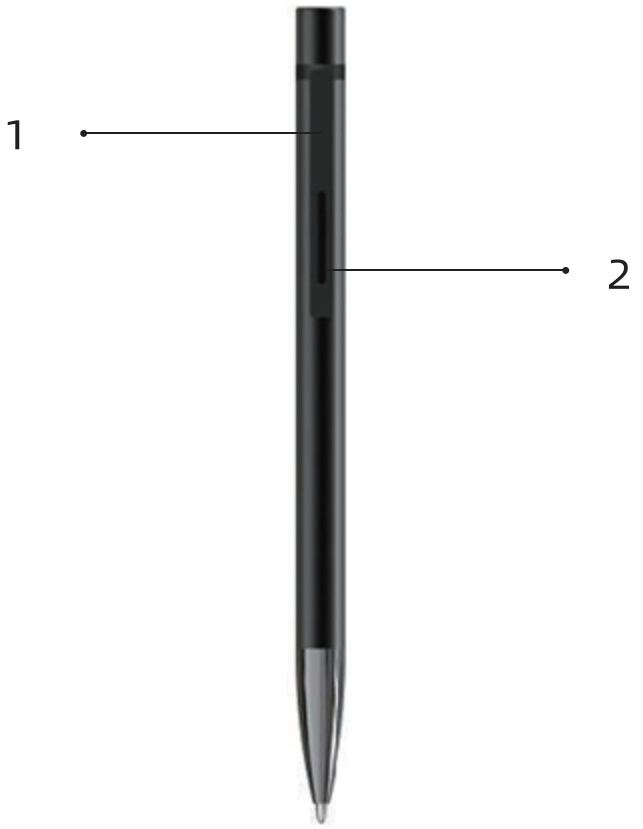


1. Press the rebound button lightly

2. The indicator light flashes blue 5 times and then turns off, which means recording starts.

## 3.Instructions for use

### Save:

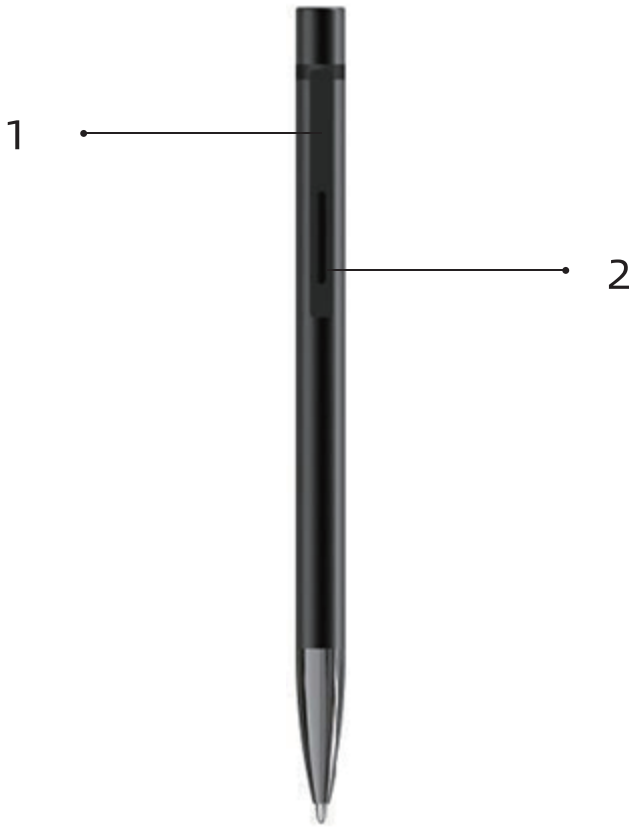


1. Press the rebound button lightly

2. The indicator light turns solid blue to save the file

## 3.Instructions for use

### Shut down:

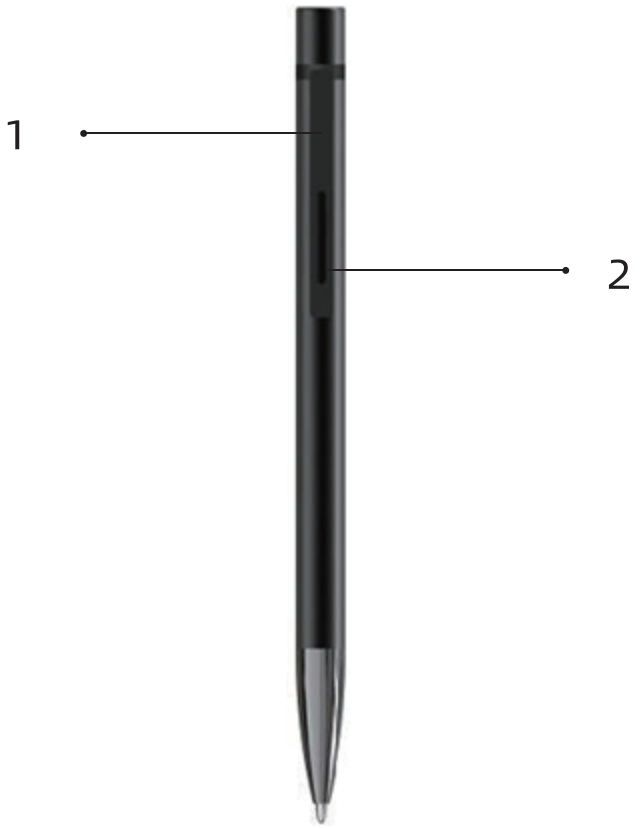


1. Press the rebound button for 3 seconds

2. The indicator light turns red for 1 second and then turns off

# Others:

### USB/Charging Tips:

The red light flashes duringcharging, and the fully charged indicator light is green.

---

### Low battery state:

When the battery is low, the red light flashes 5 times during recording and standby mode, and the device will shut down.

---

## Maintenance regulations:

1. From the date of purchase, if the product fails under normal use within one year, our company will be responsible for free repair
2. The starting date of the warranty period shall be based on the product purchase date and invoice.
3. Please present the product warranty card and invoice when repairing
4. Please keep this warranty card properly. It will not be replaced if lost. The purchase date filled in must match the invoice number , otherwise it will be invalid.
5. This card cannot be altered, otherwise it will be invalid.
6. For products that have exceeded the warranty period or are not eligible for free repair, our repair service center will still provide you with enthusiastic service.

## The following situations are not covered by free repair:

1. Products that have exceeded the warranty period.
2. Those who cannot provide purchase invoice or valid voucher
3. The appearance becomes old due to use, but consumers require newer ones
4. Failure due to failure to use the product in accordance with the instructions.
5. Failure caused by falling or collision
6. Failure caused by self-installation, disassembly or repair.
7. Products that have undergone performance overload tests due to samples and processed products on commercial display.

This card is issued together with the product, one card for each device. To ensure that you can fully enjoy the free warranty service provided by our company, please keep this card properly sealed. We will not replace it if lost.

Purchase date: _____

| Product Information | Name | AI Smart Voice Recorder | Factory number | |
|---|---|---|---|---|
| | Model | X1 | Production Date | |

| Repair records | Fault conditions | Repair results | Date |
|---|---|---|---|
| | | | |
| | | | |
| | Customer signature | Repair person's signature | |
| | | | |
| | | | |

App download link
(scan QR code)

FCC ID:2BOEZMRP-01

# FCC Warning

This device complies with part 15 of the FCC Rules. Operation is subject to the following two conditions: (1) This device may not cause harmful interference, and (2) this device must accept any interference received, including interference that may cause undesired operation.

Any Changes or modifications not expressly approved by the party responsible for compliance could void the user's authority to operate the equipment.

**Note:** This equipment has been tested and found to comply with the limits for a Class B digital device, pursuant to part 15 of the FCC Rules. These limits are designed to provide reasonable protection against harmful interference in a residential installation. This equipment generates uses and can radiate radio frequency energy and, if not installed and used in accordance with the instructions, may cause harmful interference to radio communications. However, there is no guarantee that interference will not occur in a particular installation. If this equipment does cause harmful interference to radio or television reception, which can be determined by turning the equipment off and on, the user is encouraged to try to correct the interference by one or more of the following measures:

-Reorient or relocate the receiving antenna.

-Increase the separation between the equipment and receiver.

-Connect the equipment into an outlet on a circuit different from that to which the receiver is connected.

-Consult the dealer or an experienced radio/TV technician for help.

The device has been evaluated to meet general RF exposure requirement. The device can be used in portable exposure condition without restriction.