A2LA Cert. No. 5463.01

TEST REPORT

Report Number	:	TZ0035250420FRF19
Product Name	:	Unicorn Toy Walkie - Talkie
Model/Type reference	:	MQ-25
FCC ID	:	2BOFY-MQ-25
Prepared for	:	Shantou Qichuang Toy Industry Co.,Ltd 5th Floor, No.12 GouQian Road, XiaJiao JiaoNei industrial Zone, ChengHua Street, ChengHai District, ShanTou City, GuangDong Province, China

Prepared By	:	Shenzhen Tongzhou Testing Co.,Ltd. 1st Floor, Building 1, Haomai High-tech Park, Huating Road 387, Dalang Street, Longhua, Shenzhen, China
Standards	:	FCC CFR Title 47 Part 95 Subpart B, ANSI C63.26-2015
Date of Test	:	2025-04-16 ~ 2025-04-28
Date of Issue	:	2025-04-29
Prepared by	:	Lena Wen
Reviewed by	:	Allen Lai
Approved by	:	Max Zhang (Authorized Officer)

This publication may be reproduced in whole or in part for non-commercial purposes as long as the Shenzhen Tongzhou Testing Co.,Ltd. is acknowledged as copyright owner and source of the material. Shenzhen Tongzhou Testing Co.,Ltd. takes no responsibility for and will not assume liability for damages resulting from the reader's interpretation of the reproduced material due to its placement and context.
The test report apply only to the specific sample(s) tested under stated test conditions.
It is not permitted to copy extracts of these test result without the written permission of the test laboratory.

** Report Revise Record **

Report Version	Revise Time	Issued Date	Valid Version	Notes
V1.0	/	2025-04-29	Valid	Initial release

TABLE OF CONTENTS

1. GENERAL INFORMATION 4

1.1. Client Information 4
1.2. Description of Device (EUT) 4
1.3. Wireless Function Tested in this Report 4
1.4. Description of Test Facility 5
1.5. Statement of the Measurement Uncertainty 5
1.6. Measurement Uncertainty 6
1.7. Description of Test Modes 6
1.8. Frequency of Channels 6

2. TEST METHODOLOGY 7

2.1. EUT Configuration 7
2.2. EUT Related Submittal (s) / Grant (s) 7
2.3. Test Sample 7

3. SYSTEM TEST CONFIGURATION 8

3.1. Justification 8
3.2. Special Accessories 8
3.3. Block Diagram/Schematics 8
3.4. Equipment Modifications 8
3.5. Test Setup 8

4. SUMMARY OF TEST RESULTS 9

5. TEST RESULT 10

5.1. Frequency Stability 10
5.2. Bandwidth 12
5.3. Transmitter Power 14
5.4. Modulation Characteristics 16
5.5. Unwanted Emissions 20
5.6. Antenna Requirements 26

6. LIST OF MEASURING EQUIPMENTS 27

7. TEST SETUP PHOTOGRAPHS OF EUT 28

8. EXTERIOR PHOTOGRAPHS OF THE EUT 28

9. INTERIOR PHOTOGRAPHS OF THE EUT 28

1. GENERAL INFORMATION

1.1. Client Information

Applicant	:	Shantou Qichuang Toy Industry Co.,Ltd
Address	:	5th Floor, No.12 GouQian Road, XiaJiao JiaoNei industrial Zone, ChengHua Street, ChengHai District, ShanTou City, GuangDong Province, China
Manufacturer	:	Shantou Qichuang Toy Industry Co.,Ltd
Address	:	5th Floor, No.12 GouQian Road, XiaJiao JiaoNei industrial Zone, ChengHua Street, ChengHai District, ShanTou City, GuangDong Province, China

1.2. Description of Device (EUT)

Product Name	:	Unicorn Toy Walkie - Talkie
Trade Mark	:	/
Model Number	:	MQ-25
Model Declaration	:	N/A
Test Model	:	MQ-25
Power Supply	:	DC 4.5V by 1.5V*3 batteries
Hardware version	:	V1.0
Software version	:	V1.0

1.3. Wireless Function Tested in this Report

FRS 462MHz Band		
Operation Frequency	:	462.5625MHz, 462.5875MHz, 462.6125MHz
Channel Number	:	3 Channels
Channel bandwidth	:	12.5kHz
Rated Power	:	-7.5dBm
Modulation Technology	:	FM
Antenna Type And Gain	:	Coil antenna, 0dBi

Note 1: Antenna position refer to EUT Photos.
Note 2: the above information was supplied by the applicant.

1.4. Description of Test Facility

FCC

Designation Number: CN1275
Test Firm Registration Number: 167722
Shenzhen Tongzhou Testing Co.,Ltd. has been listed on the US Federal Communications Commission list of test facilities recognized to perform electromagnetic emissions measurements.

A2LA

Certificate Number: 5463.01
Shenzhen Tongzhou Testing Co.,Ltd. has been listed by American Association for Laboratory Accreditation to perform electromagnetic emission measurement.

IC

ISED#: 22033
CAB identifier: CN0099
Shenzhen Tongzhou Testing Co.,Ltd. has been listed by Innovation, Science and Economic Development Canada to perform electromagnetic emission measurement.

The 3m-Semi anechoic test site fulfils CISPR 16-1-4 according to ANSI C63.4 and CISPR 16-1-4:2010

1.5. Statement of the Measurement Uncertainty

The data and results referenced in this document are true and accurate. The reader is cautioned that there may be errors within the calibration limits of the equipment and facilities. The measurement uncertainty was calculated for all measurements listed in this test report acc. To CISPR 16 – 4 “Specification for radio disturbance and immunity measuring apparatus and methods – Part 4: Uncertainty in EMC Measurements” and is documented in the Shenzhen Tongzhou Testing Co.,Ltd.’s quality system acc. To DIN EN ISO/IEC 17025. Furthermore, component and process variability of devices similar to that tested may result in additional deviation. The manufacturer has the sole responsibility of continued compliance of the device.

1.6. Measurement Uncertainty

Test Item		Uncertainty	Note
Radiation Uncertainty(9KHz~30MHz)	:	±3.26dB	(1)
Radiation Uncertainty(30MHz~1000MHz)	:	±3.92dB	(1)
Radiation Uncertainty(1GHz~40GHz)	:	±5.62dB	(1)
Occupied Channel Bandwidth	:	±3.0%	(1)
Audio Level	:	±0.4%	(1)
FM deviation		±1.2%	(1)
Frequency stability		±0.12ppm	(1)

(1). This uncertainty represents an expanded uncertainty expressed at approximately the 95% confidence level using a coverage factor of k=2.

1.7. Description of Test Modes

The EUT has been tested under operating condition.

This test was performed with EUT in X, Y, Z position and the worst case was found when EUT in X position.

1.8. Frequency of Channels

Frequency Band	Channel No.	Frequency(MHz)	Channel No.	Frequency(MHz)
FRS 462MHz	1	462.5625	2	462.5875
	3	462.6125	/	/
For EUTs that operate in a frequency range of **1 MHz or less**, only **one test frequency** is required. The test frequency **462.5875 MHz** was selected.				

2. TEST METHODOLOGY

All measurements contained in this report were conducted with ANSI C63.26-2015, American National Standard for Compliance Testing of Transmitters Used in Licensed Radio Services.
The radiated testing was performed at an antenna-to-EUT distance of 3 meters. All radiated and conducted emissions measurement was performed at Shenzhen Tongzhou Testing Co.,Ltd.

2.1. EUT Configuration

The EUT configuration for testing is installed on RF field strength measurement to meet the Commissions requirement and operating in a manner that intends to maximize its emission characteristics in a continuous normal application.

EUT

2.2. EUT Related Submittal (s) / Grant (s)

This submittal(s) (test report) is intended for **FCC ID: 2BOFY-MQ-25** filing to comply with FCC Part 2, FCC Part 95 Subpart B of the FCC CFR 47 Rules.

2.3. Test Sample

Sample ID	Description
TZ0035250420–1#	Normal sample – continuous transmit

3. SYSTEM TEST CONFIGURATION

3.1. Justification

The system was configured for testing in a continuous transmits condition.

3.2. Special Accessories

No.	Equipment	Manufacturer	Model No.	Serial No.	Length	shielded/ unshielded	Notes
/	/	/	/	/	/	/	/

3.3. Block Diagram/Schematics

Please refer to the related document.

3.4. Equipment Modifications

Shenzhen Tongzhou Testing Co.,Ltd. has not done any modification on the EUT.

3.5. Test Setup

Please refer to the test setup photo.

4. SUMMARY OF TEST RESULTS

FCC Rules	Description of Test	Sample ID	Result
§95.587	Antenna Equipment	TZ0035250420–1#	Compliant
§ 95.567 & 2.1046(a)	Transmitter Power	TZ0035250420–1#	Compliant
§95.575 & 2.1047(a) (b)	Modulation Limit	TZ0035250420–1#	Compliant
§95.573 & §2.1049	Bandwidth	TZ0035250420–1#	Compliant
§95.579 & 2.1049	Unwanted Emissions	TZ0035250420–1#	Compliant
§95.565 & 2.1055(a) (1)	Frequency Stability	TZ0035250420–1#	Compliant

5. TEST RESULT

5.1. Frequency Stability

5.1.1. Standard Applicable

Each FRS transmitter type must be designed such that the carrier frequencies remain within ±2.5 parts-per-million (ppm) of the channel center frequencies specified in §95.563 during normal operating conditions.

5.1.2. Block Diagram of Test Setup

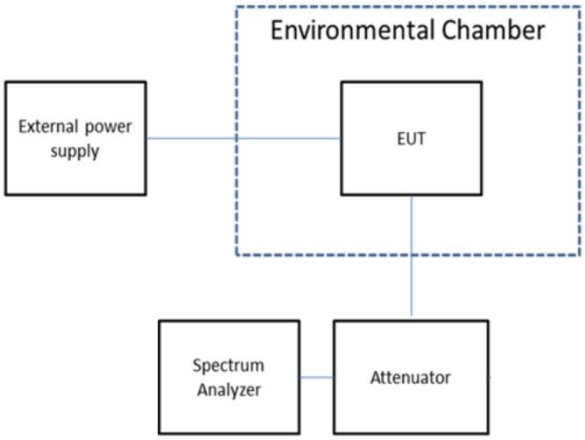

5.1.3. Test Procedures

Frequency stability versus environmental temperature

1. Setup the configuration for frequencies measurement inside an environment chamber, Install new battery in the EUT.
2. Turn on EUT and set SA center frequency to the EUT radiated frequency. Set SA Resolution Bandwidth to 300Hz and Video Resolution Bandwidth to 1kHz and Frequency Span to 10kHz.Record this frequency as reference frequency.
3. Set the temperature of chamber to 50℃. Allow sufficient time (approximately 30 min) for the temperature of the chamber to stabilize. While maintaining a constant temperature inside the chamber, turn the EUT on and measure the EUT operating frequency.
4. Repeat step 2 with a 10℃ decreased per stage until the lowest temperature -30℃ is measured, record all measured frequencies on each temperature step.

Frequency stability versus input voltage

1. Setup the configuration per figure 1 for frequencies measured at temperature if it is within 15℃ to 25℃. Otherwise, an environment chamber set for a temperature of 20℃ shall be used. The EUT shall be powered by normal voltage.
2. Set SA center frequency to the EUT radiated frequency. Set SA Resolution Bandwidth to 300Hz and Video Resolution Bandwidth to 1kHz. Record this frequency as reference frequency.
3. Supply the EUT primary voltage at the operating end point which is specified by manufacturer and record the frequency.

5.1.4. EUT Operation during Test

The EUT was programmed to be in continuously transmitting mode.

5.1.5. Test Results

Test Channel: 462.5875MHz

Test conditions		Frequency error (ppm)
Voltage Condition	Temp(℃)	
NV	-20	-1.20
	-10	-1.21
	0	-1.20
	10	-1.19
	20	-1.21
	30	-1.21
	40	-1.19
	50	-1.17
LV	20	-1.19
HV	20	-1.20
Limit(ppm)		2.50
Result		PASS

NV: Normal Voltage 4.5V

LV: Low Voltage 3.8V

HV: High Voltage 5.2V

5.2. Bandwidth

5.2.1. Standard Applicable

The authorized bandwidth for an FRS unit is 12.5 kHz.

5.2.2. Block Diagram of Test Setup

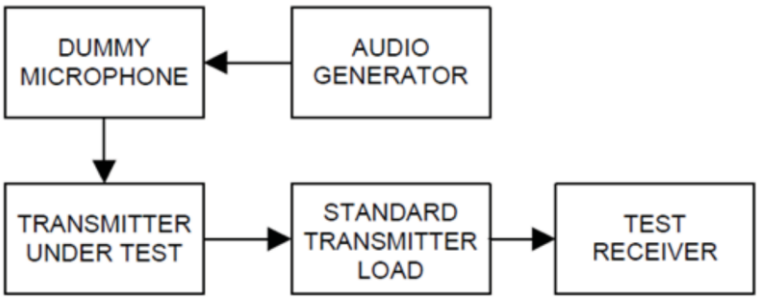

5.2.3. Test Procedures

1. The EUT was modulated by 2.5kHz sine wave audio signal; the level of the audio signal employed is 16dB greater than that necessary to produce 50% of rated system deviation.
2. Rated system deviation is 2.5 kHz for 12.5kHz channel spacing.
3. Spectrum set as follow:
   Centre Frequency = Fundamental Frequency,
   Span=30kHz for 12.5kHz channel spacing, RBW=300Hz, VBW=1kHz, Sweep = Auto,
   Detector Function = Peak, Trace = Max hold
4. Set 99% Occupied Bandwidth and 26dB Emission Bandwidth.
5. Measure and record the results in the test report.

5.2.4. EUT Operation during Test

The EUT was programmed to be in continuously transmitting mode.

5.2.5. Test Results

Test Channel	Occupied Bandwidth (kHz)	Emission Bandwidth (kHz)	Limits (kHz)	Result
462.5875 MHz	9.707	10.41	12.5	Pass

Test Graph for 462.5875MHz

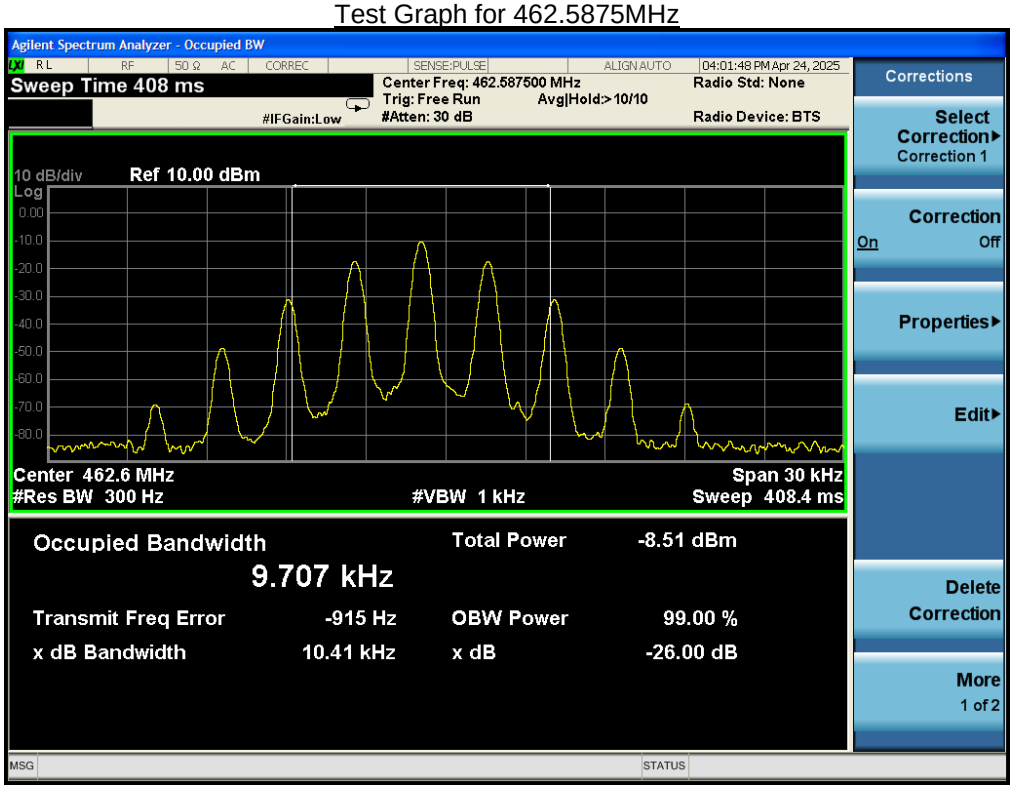

5.3. Transmitter Power

5.3.1. Standard Applicable

Each FRS transmitter type must be designed such that the effective radiated power (ERP) on channels 8 through 14 does not exceed 0.5 Watts and the ERP on channels 1 through 7 and 15 through 22 does not exceed 2.0 Watts.

5.3.2. Block Diagram of Test Setup

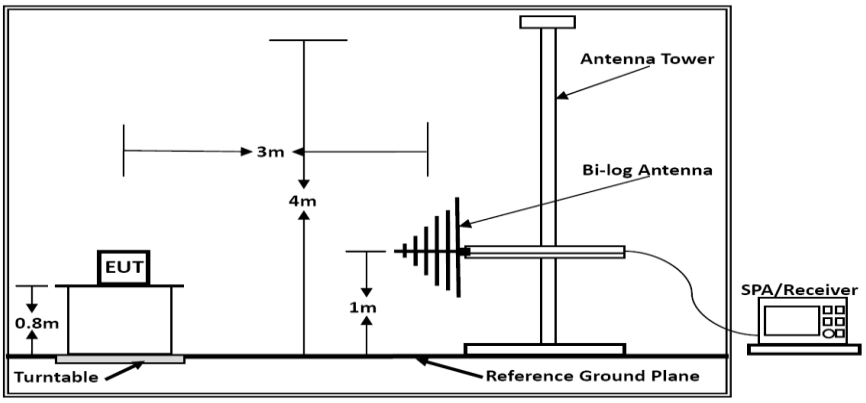

Below 1GHz

5.3.3. Test Procedures

The EUT shall be placed on a RF-transparent table or support at a nominal height of 80 cm above the reference ground plane. Radiated measurements shall be made with the measurement antenna positioned in both horizontal and vertical polarization. The measurement antenna shall be varied from 1 m to 4 m in height above the reference ground in a search for the relative positioning that produces the maximum radiated signal level (i.e., field strength or received power). When orienting the measurement antenna in vertical polarization, the minimum height of the lowest element of the antenna shall clear the site reference ground plane by at least 25 cm.

Cables or wires inclusive to the EUT shall be configured so as to maximize the measured emission levels. The EUT controls shall also be adjusted to maximize the emission according to the manufacturer's specifications. The modulation applied shall be based on the guidance provided in the manufacturer's specifications. When necessary, field strength measurements shall be converted to ERP or EIRP for comparison to the applicable regulatory limits.

E (dBμV/m) = Measured amplitude level (dBμV)+ Cable Loss (dB)+ Antenna Factor (dB/m).

EIRP (dBm) = E (dBuV/m) + 20log(D) - 104.8, where D is the measurement distance (in the fardfield region) in m.

EIRP (dBm) = ERP (dBm) + 2.15

5.3.4. EUT Operation during Test

The EUT was programmed to be in continuously transmitting mode.

5.3.5. Test Results

Frequency (MHz)	Antenna Polarization	Measured amplitude level (dBμV)	Cable Loss (dB)	Antenna Factor dB/m	Field Strength (dBμV/m)	ERP Result (dBm)	ERP Result (W)	Limit (W)	Result
462.5875	V	71.27	1.6	15.8	88.67	-8.68	0.00014	2	Pass
462.5875	H	72.14	1.6	15.8	89.54	**-7.81**	0.00017	2	Pass

5.4. Modulation Characteristics

5.4.1. Standard Applicable

According to FCC§2.1047 and §95.575, for Voice Modulation Communication Equipment, the frequency response of the audio modulation circuit over a range of 100 to 5000Hz shall be measured.
Each FRS transmitter type must be designed such that the peak frequency deviation does not exceed 2.5 kHz, and the highest audio frequency contributing substantially to modulation must not exceed 3.125 kHz.

5.4.2. Block Diagram of Test Setup

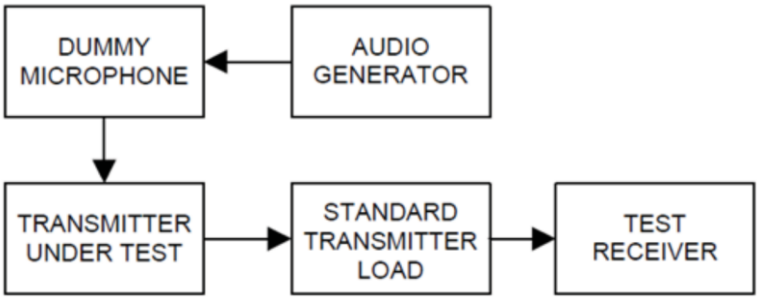

5.4.3. Test Procedures

Modulation Limit

1. Test layout and build equipment as shown above.
2. adjust the audio input for 60% of rated system deviation at 1kHz using this level as a reference (0dB).
3. Vary the input level from –20 to +20dB.
4. Record the frequency deviation obtained as a function of the input level.
5. Repeat step 2 with input frequency changing to 300, 1000, 1500 and 3000Hz in sequence.

Audio Frequency Response

1. Test layout and build equipment as shown above.
2. Adjust the audio input for 20% of rated system deviation at 1 kHz using this level as a reference (0 dB).
3. Vary the Audio frequency from 100 Hz to 10 kHz and record the frequency deviation.
4. Audio Frequency Response = 20log10 (Deviation of test frequency/Deviation of 1 kHz reference).

5.4.4. EUT Operation during Test

The EUT was programmed to be in continuously transmitting mode.

5.4.5. Test Results

Modulation Limit:

462.5875MHz@ 12.5 kHz Channel Separation				
Modulation Level (dB)	Peak Freq. Deviation At 300 Hz (kHz)	Peak Freq. Deviation At 1000 Hz (kHz)	Peak Freq. Deviation At 1500 Hz (kHz)	Peak Freq. Deviation At 3000 Hz (kHz)
-20	0.10	0.21	0.25	0.08
-15	0.11	0.31	0.40	0.18
-10	0.30	0.56	0.75	0.27
-5	0.43	0.85	1.36	0.59
0	0.28	1.50	1.82	0.68
+5	0.50	1.97	1.84	1.21
+10	1.00	2.03	1.87	1.63
+15	1.58	2.05	1.90	1.72
+20	1.90	2.02	1.94	1.81

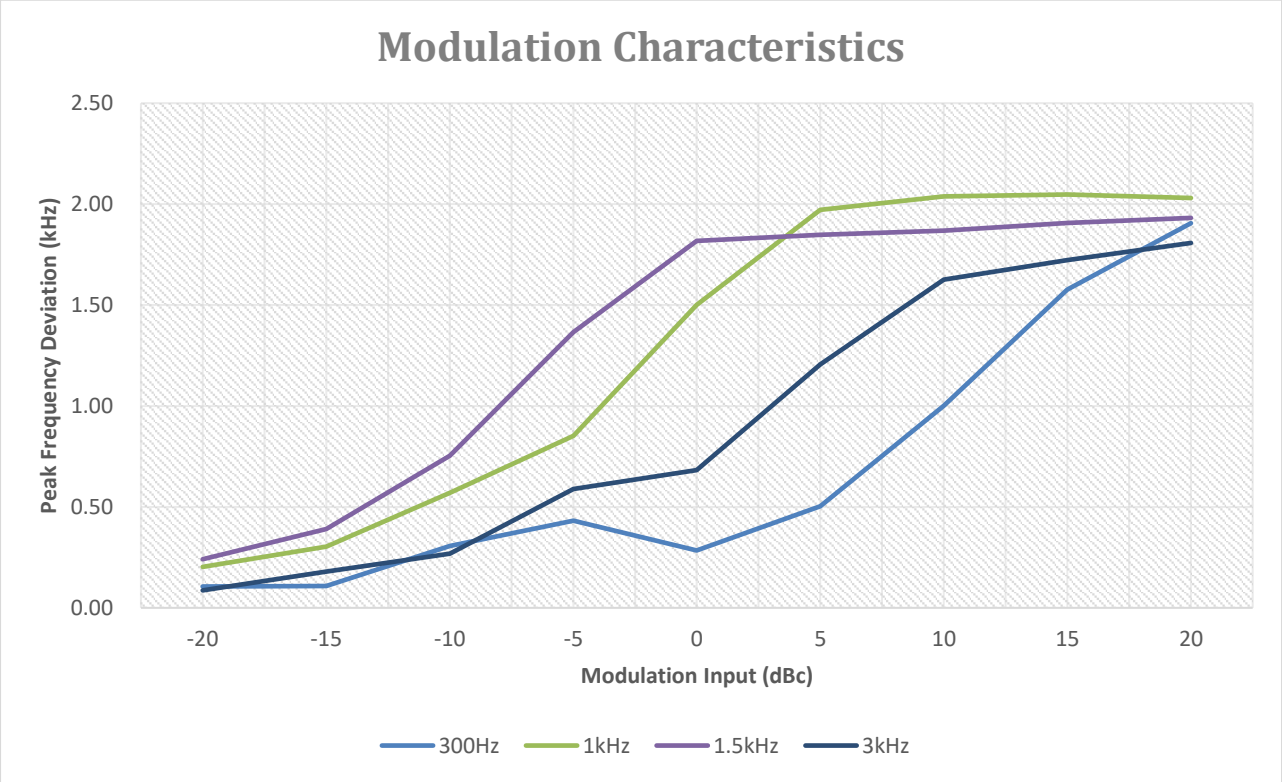

Audio Frequency Response:

462.5875MHz@ 12.5 kHz Channel Separation			
Frequency (Hz)	Lower Limit(dB)	Audio Frequency Response(dB)	Higher Limit(dB)
300	-17.84	-11.02	-9.42
400	-12.86	-8.83	-6.93
500	-9.00	-6.77	-5.00
600	-7.42	-4.73	-3.42
700	-6.09	-3.39	-2.09
800	-4.93	-2.03	-0.93
900	-3.91	-1.12	0.09
1000	-3	-0.02	1.00
1100	-2.17	0.93	1.83
1200	-1.42	1.44	2.58
1300	-0.73	2.22	3.27
1400	-0.09	2.82	3.91
1500	0.51	3.65	4.51
1600	1.07	4.16	5.07
1700	1.59	4.82	5.59
1800	2.09	5.22	6.09
1900	2.56	5.34	6.56
2000	3.00	5.87	7.00
2100	3.42	6.09	7.42
2200	3.83	6.27	7.83
2300	4.21	6.79	8.21
2400	4.21	7.23	8.58
2500	4.21	7.30	8.93
2600	4.21	7.03	9.27
2700	4.21	5.51	9.60
2800	3.58	5.16	9.91
2900	2.97	4.71	10.22
3000	2.39	4.56	10.51

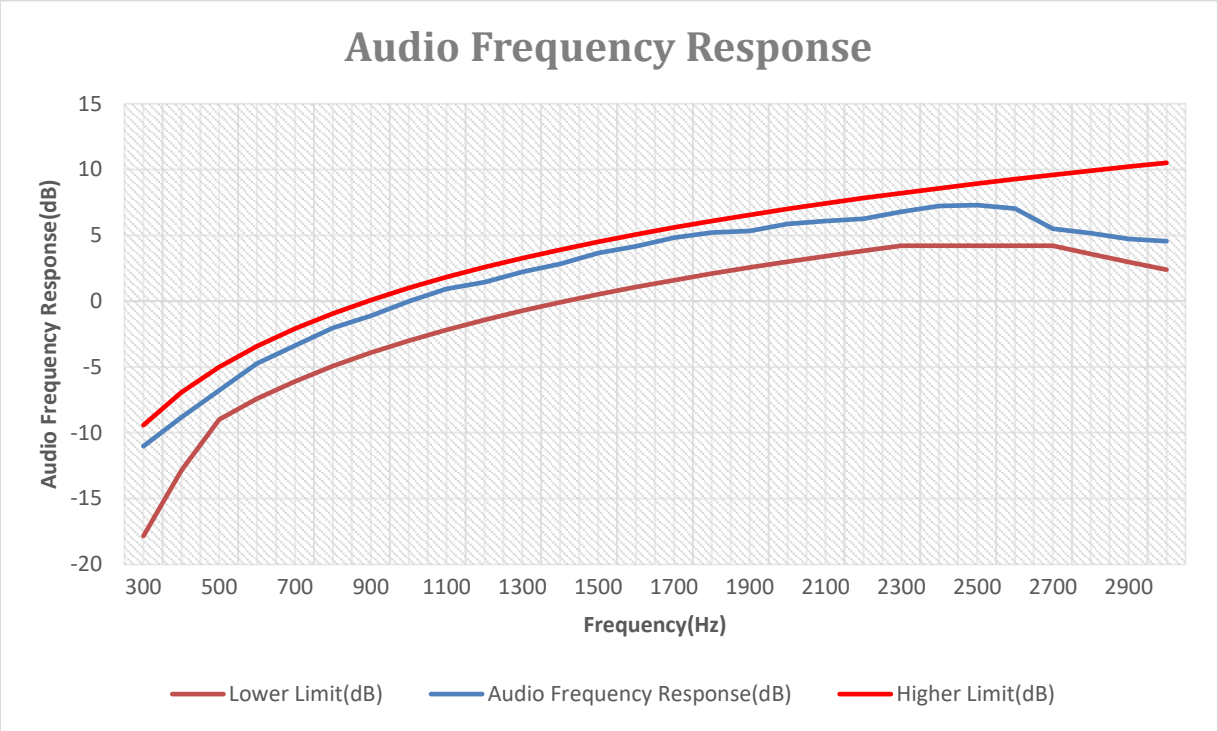
Audio Frequency Response
Audio Frequency Response(dB)
15
10
5
0
-5
-10
-15
-20
300
500
700
900
1100
1300
1500
1700
1900
2100
2300
2500
2700
2900
Frequency(Hz)
Lower Limit(dB)
Audio Frequency Response(dB)
Higher Limit(dB)

5.5. Unwanted Emissions

5.5.1. Standard Applicable

Each FRS transmitter type must be designed to satisfy the applicable unwanted emissions limits in this paragraph.

(a) Attenuation requirements. The power of unwanted emissions must be attenuated below the carrier power output in Watts (P) by at least:

(1) 25 dB (decibels) in the frequency band 6.25 kHz to 12.5 kHz removed from the channel center frequency.

(2) 35 dB in the frequency band 12.5 kHz to 31.25 kHz removed from the channel center frequency.

(3) 43 + 10 log (P) dB in any frequency band removed from the channel center frequency by more than 31.25 kHz.

(b) Measurement bandwidths. The power of unwanted emissions in the frequency bands specified in paragraphs (a)(1) and (2) of this section is measured with a reference bandwidth of 300 Hz. The power of unwanted emissions in the frequency range specified in paragraph (a)(3) is measured with a reference bandwidth of at least 30 kHz.

c) Measurement conditions. The requirements in this section apply to each FRS transmitter type both with and without the connection of permitted attachments, such as an external speaker, microphone and/or power cord.

5.5.2. Block Diagram of Test Setup

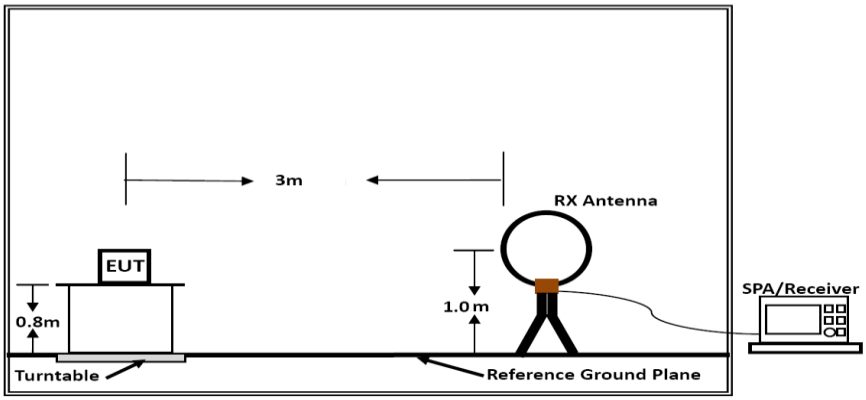

Below 30MHz

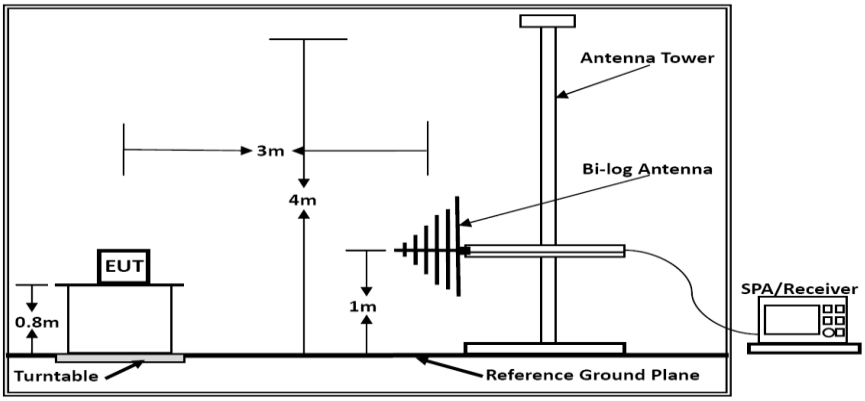

Below 1GHz

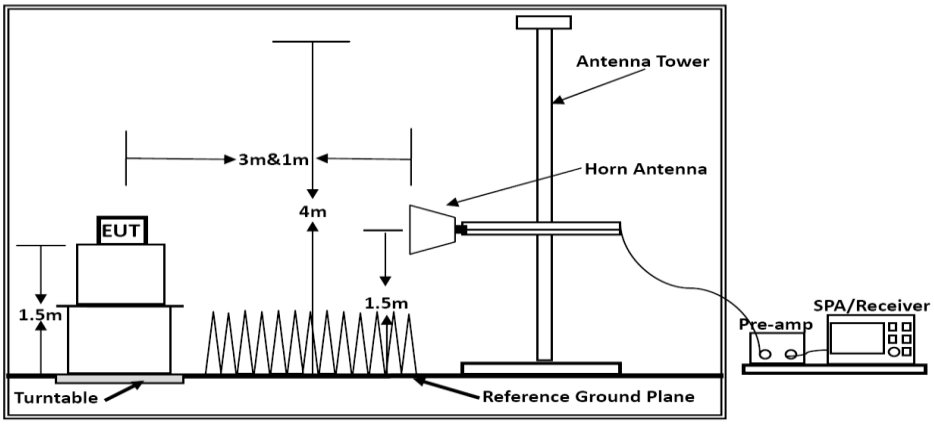

Above 1GHz

5.5.3. Test Procedures

<u>The power of unwanted emissions in the frequency range specified in paragraph (a)(3)</u>

For radiated emissions measurements performed at frequencies less than or equal to 1 GHz, the EUT shall be placed on a RF-transparent table or support at a nominal height of 80 cm above the reference ground plane. Radiated measurements shall be made with the measurement antenna positioned in both horizontal and vertical polarization. The measurement antenna shall be varied from 1 m to 4 m in height above the reference ground in a search for the relative positioning that produces the maximum radiated signal level (i.e., field strength or received power). When orienting the measurement antenna in vertical polarization, the minimum height of the lowest element of the antenna shall clear the site reference ground plane by at least 25 cm.

For radiated measurements performed at frequencies above 1 GHz, the EUT shall be placed on an RF transparent table or support at a nominal height of 1.5 m above the ground plane. Radiated measurements shall be made with the measurement antenna positioned in both horizontal and vertical polarization. The height scan of the measurement antenna shall be varied from 1 m to 4 m in a search for the relative positioning that produces the maximum radiated signal level (i.e., field strength or received power). When using the direct field strength method and the EUT is manipulated through three different orientations, then the scan height range of the measurement antenna is limited to 2.5 m, or 0.5 m above the top of the EUT, whichever is higher.

Cables or wires inclusive to the EUT shall be configured so as to maximize the measured emission levels. The EUT controls shall also be adjusted to maximize the emission according to the manufacturer's specifications. The modulation applied shall be based on the guidance provided in the manufacturer's specifications. When necessary, field strength measurements shall be converted to ERP or EIRP for comparison to the applicable regulatory limits.

E (dBµV/m) = Measured amplitude level (dBµV)+ Cable Loss (dB)+ Antenna Factor (dB/m).

EIRP (dBm) = E (dBuV/m) + 20log(D) - 104.8, where D is the measurement distance (in the fardfield region) in m.

The power of unwanted emissions in the frequency bands specified in paragraphs (a)(1) and (2)

The detailed procedure employed for Emission Mask measurements are specified as following:

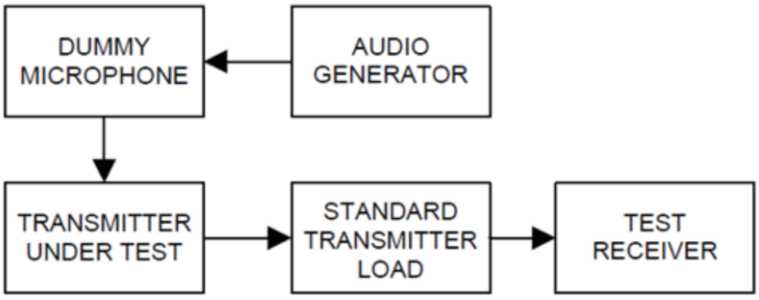

-Connect the equipment as illustrated.

-Spectrum set as follow:

1. Centre frequency = fundamental frequency, Span=150kHz for 12.5kHz , RBW=300Hz, VBW=1000Hz ;
2. Sweep = auto, Detector function = peak, Trace = max hold
3. Key the transmitter, and set the level of the unmodulated carrier to a full scale reference line. This is the 0dB reference for the measurement.
4. Modulate the transmitter with a 2500 Hz sine wave at an input level 16 dB greater than that necessary to produce 50% of rated system deviation (Rated system deviation is 2.5 kHz for 12.5kHz channel spacing). The input level shall be established at the frequency of maximum response of the audio modulating circuit.
5. Transmitters employing digital modulation techniques that bypass the limiter and the audio low-pass filter shall be modulated as specified by the manufacturer.
6. Measure and record the results in the test report.

5.5.4. EUT Operation during Test

The EUT was programmed to be in continuously transmitting mode.

5.5.5. Test Results

The power of unwanted emissions in the frequency range specified in paragraph (a)(3)

Test Mode:	TX-462.5875MHz	Polarity:	Horizontal

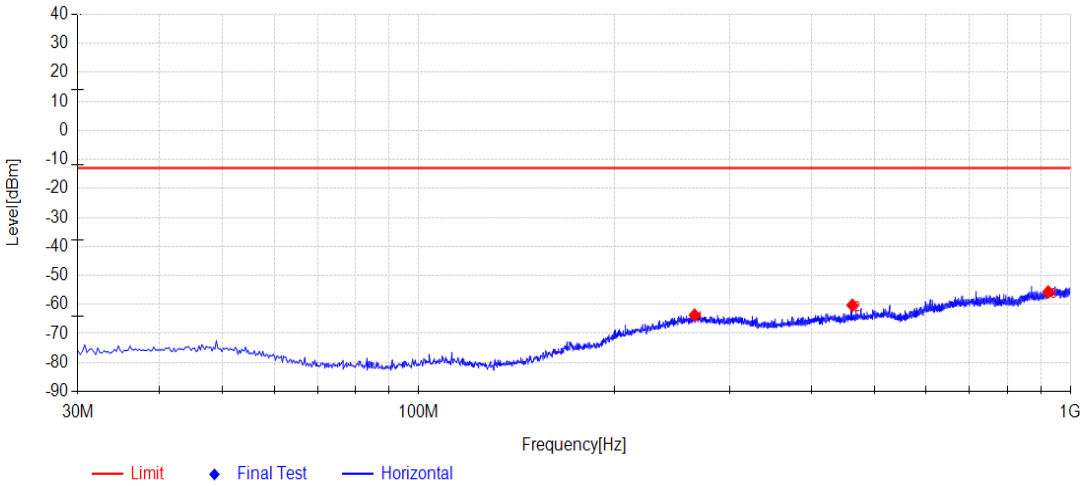

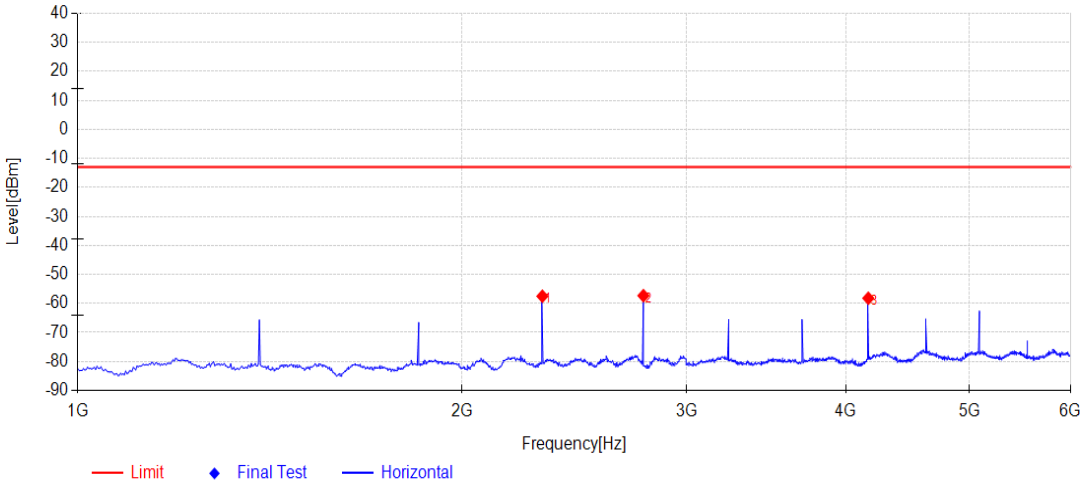

NO.	Freq. [MHz]	Reading [dBm]	Factor [dB]	Level [dBm]	Limit [dBm]	Margin [dB]	Polarity
1	264.9825	-92.84	29.14	-63.70	-13.00	50.70	Horizontal
2	462.5875	-89.87	29.61	-60.26	-13.00	47.26	Horizontal
3	924.0975	-93.11	37.39	-55.72	-13.00	42.72	Horizontal
4	2312.5	-56.48	-1.04	-57.52	-13.00	44.52	Horizontal
5	2775	-57.78	0.44	-57.34	-13.00	44.34	Horizontal
6	4165	-61.65	3.41	-58.24	-13.00	45.24	Horizontal

Test Mode:	TX-462.5875MHz	Polarity:	Vertical

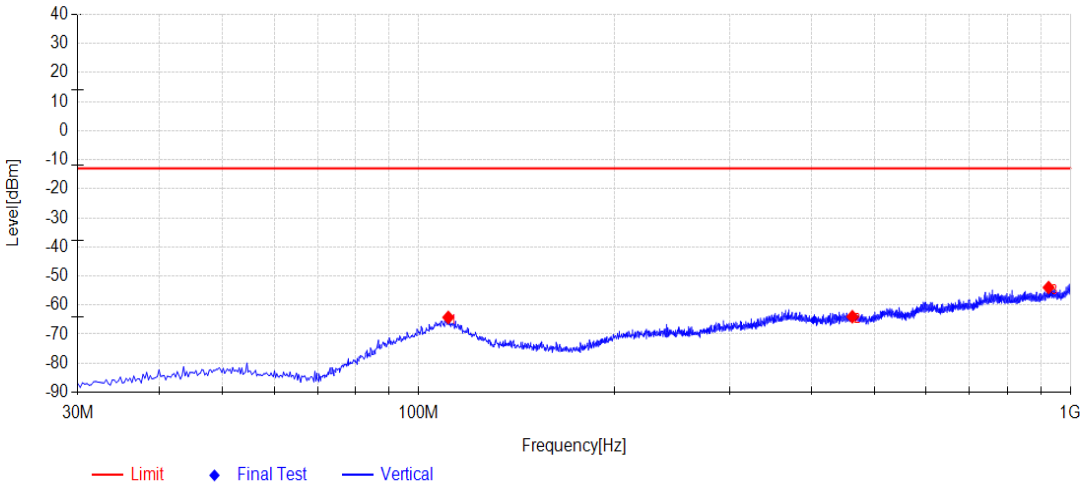

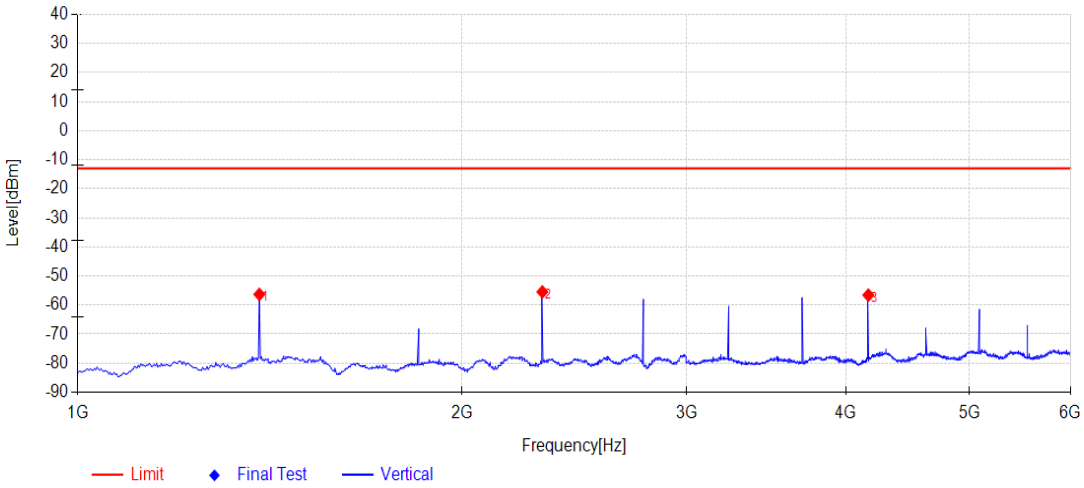

NO.	Freq. [MHz]	Reading [dBm]	Factor [dB]	Level [dBm]	Limit [dBm]	Margin [dB]	Polarity
1	110.995	-92.60	28.32	-64.28	-13.00	51.28	Vertical
2	462.587	-93.64	29.61	-64.03	-13.00	51.03	Vertical
3	925.31	-91.26	37.28	-53.98	-13.00	40.98	Vertical
4	1387.5	-55.45	-0.88	-56.33	-13.00	43.33	Vertical
5	2312.5	-55.35	-0.12	-55.47	-13.00	42.47	Vertical
6	4165	-60.95	4.35	-56.60	-13.00	43.60	Vertical

The power of unwanted emissions in the frequency bands specified in paragraphs (a)(1) and (2)

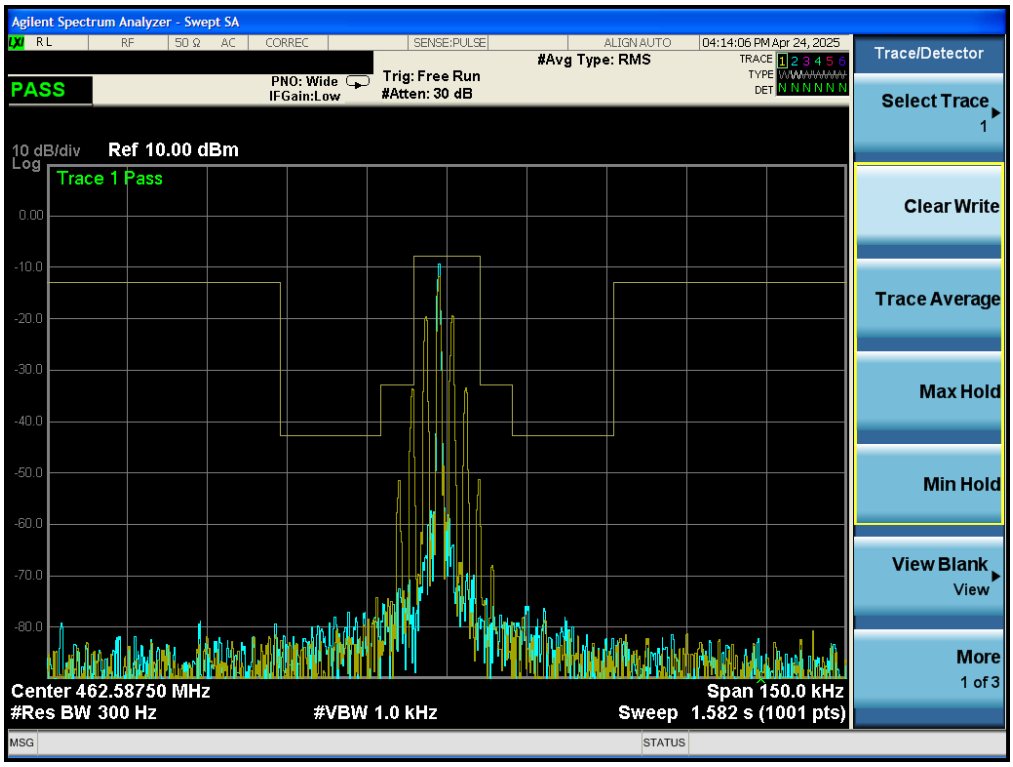

5.6. Antenna Requirements

5.6.1. Standard Applicable

The antenna of each FRS transmitter type must meet the following requirements.

(1) The antenna must be a non-removable integral part of the FRS transmitter type.

(2) The gain of the antenna must not exceed that of a half-wave dipole antenna.

(3) The antenna must be designed such that the electric field of the emitted waves is vertically polarized when the unit is operated in the normal orientation.

- The antenna of this device is **permanently attached.**
- There are no provisions for connection to an external antenna.

5.6.2. Antenna Connector Construction

The directional gains of antenna used for transmitting is refer to section 1.3 of this report, and the antenna is an internal antenna connect to PCB board and no consideration of replacement. Please see EUT photo for details.

5.6.3. Results

Compliance

6. LIST OF MEASURING EQUIPMENTS

Item	Test Equipment	Manufacturer	Model No.	Serial No.	Calibration Date	Calibration Due Date
1	EMI Test Receiver	R&S	ESCI-7	100849/003	2024-12-31	2025-12-30
2	Signal Generator (SG B)	Keysight	N5182A	MY4620709	2024-12-31	2025-12-30
3	Signal Generator(SG C)	R&S	SML03	102924/0013	2024-12-31	2025-12-30
4	Climate Chamber	KRUOMR	KRM-1000	KRM16072901	2024-12-31	2025-12-30
5	RF COMMUNICATION TEST SET(SG A)	HP	8921A	3430A01131	2024-12-31	2025-12-30
6	Wideband Antenna	schwarzbeck	VULB 9163	958	2022-11-13	2025-11-12
7	Wideband Antenna	Sunol	JB3	A020115	2022-11-13	2025-11-12
8	Amplifier	schwarzbeck	BBV 9743	209	2024-12-31	2025-12-30
9	Amplifier	Tonscend	TSAMP-0518SE	--	2024-12-31	2025-12-30
10	Horn Antenna	schwarzbeck	BBHA 9120D	01989	2022-11-13	2025-11-12
11	Horn Antenna	schwarzbeck	9120D-1141	1574	2022-11-13	2025-11-12
12	50Ω RF Load	MKRF	RFA001	RFA001	2024-12-31	2025-12-30
13	Attenuator	JS	RFA004	RFA004	2024-12-31	2025-12-30
14	Controller	MF	MF7802	N/A	N/A	N/A
15	MXA Signal Analyzer	Keysight	N9020A	MY52091623	2024-12-31	2025-12-30
16	Test Software	Tonscend	JS36-RSE	V5.0.0.0	N/A	N/A

7. TEST SETUP Photographs of EUT

Please refer to separated files for Test Setup Photos of the EUT.

8. EXTERIOR PHOTOGRAPHS OF THE EUT

Please refer to separated files for External Photos of the EUT.

9. INTERIOR PHOTOGRAPHS OF THE EUT

Please refer to separated files for Internal Photos of the EUT.

----------THE END OF REPORT----------