TEST REPORT

Report No.:	BCTC2503684941-3E
Applicant:	Shenzhen Baishi Video Technology Co., Ltd.
Product Name:	Zigbee usb adapter
Test Model:	SLZB-06
Tested Date:	2025-03-10 to 2025-04-14
Issued Date:	2025-04-14

Shenzhen BCTC Testing Co., Ltd.

FCC ID: 2BOH5-SLZB-06

Product Name:	Zigbee usb adapter
Trademark:	N/A
Model/Type reference:	SLZB-06 SLZB-06-NO-POE, SLZB-06M, SLZB-06p7, SLZB-06p10, SLZB-06Mg24, SLZB-06-4G, SLZB-MR1, SLZB-MR2, SLZB-MR3, SLZB-07, SLZB-07p7, SLZB-07p10, SLZB-07Mg24, SLZB-07P2
Prepared For:	Shenzhen Baishi Video Technology Co., Ltd.
Address:	Building 4, CangqianJinfuyuan, Nanxin Road, Nanshan District, Shenzhen
Manufacturer:	Shenzhen Baishi Video Technology Co., Ltd.
Address:	Building 4, CangqianJinfuyuan, Nanxin Road, Nanshan District, Shenzhen
Prepared By:	Shenzhen BCTC Testing Co., Ltd.
Address:	1-2/F., Building B, Pengzhou Industrial Park, No.158, Fuyuan 1st Road, Zhancheng, Fuhai Subdistrict, Bao'an District, Shenzhen, Guangdong, China
Sample Received Date:	2025-03-10
Sample tested Date:	2025-03-10 to 2025-04-14
Issue Date:	2025-04-14
Report No.:	BCTC2503684941-3E
Test Standards:	FCC Part15.247 ANSI C63.10-2013
Test Results:	PASS
Remark:	This is ZigBee radio test report.

Tested by:

Min Zhi Cheng / Project Handler

Approved by:

Zero Zhou / Reviewer

The test report is effective only with both signature and specialized stamp. This result(s) shown in this report refer only to the sample(s) tested. Without written approval of Shenzhen BCTC Testing Co., Ltd, this report can't be reproduced except in full. The tested sample(s) and the sample information are provided by the client.

Table Of Content

Test Report Declaration Page
1. Version 5
2. Test Summary 6
3. Measurement Uncertainty 7
4. Product Information And Test Setup 8
4.1 Product Information 8
4.2 Test Setup Configuration 8
4.4 Channel List 9
4.5 Test Mode 9
4.6 Table Of Parameters Of Text Software Setting 10
5. Test Facility And Test Instrument Used 11
5.1 Test Facility 11
5.2 Test Instrument Used 11
6. Conducted Emissions 13
6.1 Block Diagram Of Test Setup 13
6.2 Limit 13
6.3 Test Procedure 13
6.4 EUT Operating Conditions 13
6.5 Test Result 14
7. Radiated Emissions 16
7.1 Block Diagram Of Test Setup 16
7.2 Limit 17
7.3 Test Procedure 18
7.4 EUT Operating Conditions 19
7.5 Test Result 19
8. Radiated Band Emission Measurement And Restricted Bands Of Operation 23
8.1 Block Diagram Of Test Setup 23
8.2 Limit 23
8.3 Test Procedure 24
8.4 EUT operating Conditions 24
8.5 Test Result 25
9. Power Spectral Density Test 26
9.1 Block Diagram Of Test Setup 26
9.2 Limit 26
9.3 Test Procedure 26
9.4 EUT Operating Conditions 26
9.5 Test Result 27
10. Bandwidth Test 30
10.1 Block Diagram Of Test Setup 30
10.2 Limit 30
10.3 Test Procedure 30
10.4 EUT Operating Conditions 30
10.5 Test Result 31
11. Peak Output Power Test 34
11.1 Block Diagram Of Test Setup 34

11.2 Limit 34
11.3 Test Procedure 34
11.4 EUT Operating Conditions 34
11.5 Test Result 34
12. 100 KHz Bandwidth Of Frequency Band Edge 35
12.1 Block Diagram Of Test Setup 35
12.2 Limit 35
12.3 Test Procedure 35
12.4 EUT Operating Conditions 35
12.5 Test Result 36
13. Duty Cycle Of Test Signal 41
13.1 Standard Requirement 41
13.2 Formula 41
13.3 Measurement Procedure 41
13.4 Test Result 41
14. Antenna Requirement 44
14.1 Limit 44
14.2 Test Result 44

(Note: N/A Means Not Applicable)

1. Version

Report No.	Issue Date	Description	Approved
BCTC2503684941-3E	2025-04-14	Original	Valid

2. Test Summary

The Product has been tested according to the following specifications:

No.	Test Parameter	Clause No.	Results
1	Conducted Emission	15.207	PASS
2	6dB Bandwidth	15.247 (a)(2)	PASS
3	Peak Output Power	15.247 (b)	PASS
4	Radiated Spurious Emission	15.247 (d), 15.205	PASS
5	Power Spectral Density	15.247 (e)	PASS
6	Restricted Band of Operation	15.205	PASS
7	Band Edge (Out of Band Emissions)	15.247(d)	PASS
8	Antenna Requirement	15.203	PASS

3. Measurement Uncertainty

Where relevant, the following measurement uncertainty levels have been estimated for tests performed on the Product as specified in CISPR 16-4-2. This uncertainty represents an expanded uncertainty expressed at approximately the 95% confidence level using a coverage factor of k=2.

No.	Item	Uncertainty
1	3m chamber Radiated spurious emission(9KHz-30MHz)	U=3.7dB
2	3m chamber Radiated spurious emission(30MHz-1GHz)	U=4.3dB
3	3m chamber Radiated spurious emission(1GHz-18GHz)	U=4.5dB
4	3m chamber Radiated spurious mission(18GHz-40GHz)	U=3.34dB
5	Conducted Emission (150kHz-30MHz)	U=3.20dB
6	Conducted Adjacent channel power	U=1.38dB
7	Power Spectral Density	U=1.19dB
8	Conducted output power uncertainty Above 1G	U=1.576dB
9	Conducted output power uncertainty below 1G	U=1.28dB
10	Conducted spurious emissions	U=0.55dB
11	Occupied Bandwidth / Frequency Range	U=3.46%
12	humidity uncertainty	U=5.3%
13	Temperature uncertainty	U=0.59℃
14	Frequency Error	U=53.50Hz
15	Frequency Drift	U=0.64kHz

4. Product Information And Test Setup

4.1 Product Information

Model/Type Reference:	SLZB-06 SLZB-06-NO-POE, SLZB-06M, SLZB-06p7, SLZB-06p10, SLZB-06Mg24, SLZB-06-4G, SLZB-MR1, SLZB-MR2, SLZB-MR3, SLZB-07, SLZB-07p7, SLZB-07p10, SLZB-07Mg24, SLZB-07P2
Model Differences:	All the model are the same circuit and RF module, except model names and appearance of the color.
Hardware Version:	N/A
Software Version:	N/A
Operation Frequency:	2405-2480MHz
Type of Modulation:	O-QPSK
Number Of Channel	16CH
Antenna installation:	External antenna
Antenna Gain:	5.0dBi Remark: ☒ The antenna gain of the product comes from the antenna report provided by the customer, and the test data is affected by the customer information. ☐ The antenna gain of the product is provided by the customer, and the test data is affected by the customer information.
Ratings:	DC 5V From Adapter

4.2 Test Setup Configuration

See test photographs attached in *EUT TEST SETUP PHOTOGRAPHS* for the actual connections between Product and support equipment.

4.3 Support Equipment

No.	Device Type	Brand	Model	Series No.	Note
E-1	Zigbee usb adapter	N/A	SLZB-06	---	EUT
E-2	Adapter	N/A	CD122	---	Auxiliary
E-3	PC	N/A	ThinkPad S2	---	Auxiliary

Item	Shielded Type	Ferrite Core	Length	Note
C-1	---	---	1m	DC cable unshielded

Notes:
1. All the equipment/cables were placed in the worst-case configuration to maximize the emission during the test.
2. Grounding was established in accordance with the manufacturer's requirements and conditions for the intended use.

4.4 Channel List

Channel List					
Channel	**Frequency (MHz)**	**Channel**	**Frequency (MHz)**	**Channel**	**Frequency (MHz)**
01	2405	07	2435	13	2465
02	2410	08	2440	14	2470
03	2415	09	2445	15	2475
04	2420	10	2450	16	2480
05	2425	11	2455		
06	2430	12	2460		

4.5 Test Mode

To investigate the maximum EMI emission characteristics generates from EUT, the test system was pre-scanning tested base on the consideration of following EUT operation mode or test configuration mode which possible have effect on EMI emission level. Each of these EUT operation mode(s) or test configuration mode(s) mentioned above was evaluated respectively.

For All Mode	Description	Modulation Type
Mode 1	CH01	O-QPSK
Mode 2	CH08	
Mode 3	CH16	
Mode 4	Link	

Note:
(1) The measurements are performed at the highest, middle, lowest available channels.
(2) Fully-charged battery is used during the test

4.6 Table Of Parameters Of Text Software Setting

During testing channel & power controlling software provided by the customer was used to control the operating channel as well as the output power level. The RF output power selection is for the setting of RF output power expected by the customer and is going to be fixed on the firmware of the final end product power parameters

Test software Version	**SmartRF Studio 7**		
Frequency	2405 MHz	2440 MHz	2480 MHz
Parameters	DEF	DEF	DEF

5. Test Facility And Test Instrument Used

5.1 Test Facility

All measurement facilities used to collect the measurement data are located at Shenzhen BCTC Testing Co., Ltd. Address: 1-2/F., Building B, Pengzhou Industrial Park, No.158, Fuyuan 1st Road, Zhancheng, Fuhai Subdistrict, Bao'an District, Shenzhen, Guangdong, China. The site and apparatus are constructed in conformance with the requirements of ANSI C63.4 and CISPR 16-1-1 other equivalent standards.
FCC Test Firm Registration Number: 712850
A2LA certificate registration number is: CN1212
ISED Registered No.: 23583
ISED CAB identifier: CN0017

5.2 Test Instrument Used

Conducted Emissions Test					
Equipment	**Manufacturer**	**Model#**	**Serial#**	**Last Cal.**	**Next Cal.**
Receiver	R&S	ESR3	102075	May 16, 2024	May 15, 2025
LISN	R&S	ENV216	101375	May 16, 2024	May 15, 2025
Software	Frad	EZ-EMC	EMC-CON 3A1	\	\
Pulse limiter	Schwarzbeck	VTSD9561-F	01323	May 16, 2024	May 15, 2025

RF Conducted Test					
Equipment	**Manufacturer**	**Model#**	**Serial#**	**Last Cal.**	**Next Cal.**
Power meter	Keysight	E4419	\	May 16, 2024	May 15, 2025
Power Sensor (AV)	Keysight	E9300A	\	May 16, 2024	May 15, 2025
Signal Analyzer20kHz-26.5GHz	Keysight	N9020A	MY49100060	May 16, 2024	May 15, 2025
Spectrum Analyzer9kHz-40GHz	R&S	FSP40	100363	May 16, 2024	May 15, 2025
Radio frequency control box	MAIWEI	MW100-RFCB	\	\	\
Software	MAIWEI	MTS 8310	\	\	\

Radiated Emissions Test (966 Chamber01)					
Equipment	**Manufacturer**	**Model#**	**Serial#**	**Last Cal.**	**Next Cal.**
966 chamber	ChengYu	966 Room	966	May 15, 2023	May 14, 2026
Receiver	R&S	ESR3	102075	May 16, 2024	May 15, 2025
Receiver	R&S	ESRP	101154	May 16, 2024	May 15, 2025
Amplifier	Schwarzbeck	BBV9744	9744-0037	May 16, 2024	May 15, 2025
TRILOG Broadband Antenna	Schwarzbeck	VULB9163	942	May 21, 2024	May 20, 2025
Loop Antenna(9KHz -30MHz)	Schwarzbeck	FMZB1519B	00014	May 21, 2024	May 20, 2025
Amplifier	SKET	LAPA_01G18G-45dB	SK2021040901	May 16, 2024	May 15, 2025
Horn Antenna	Schwarzbeck	BBHA9120D	1541	May 21, 2024	May 20, 2025
Amplifier(18GHz-40GHz)	MITEQ	TTA1840-35-HG	2034381	May 16, 2024	May 15, 2025
Horn Antenn(18GHz-40GHz)	Schwarzbeck	BBHA9170	00822	May 21, 2024	May 20, 2025
Spectrum Analyzer9kHz-40GHz	R&S	FSP40	100363	May 16, 2024	May 15, 2025
Software	Frad	EZ-EMC	FA-03A2 RE	\	\

6. Conducted Emissions

6.1 Block Diagram Of Test Setup

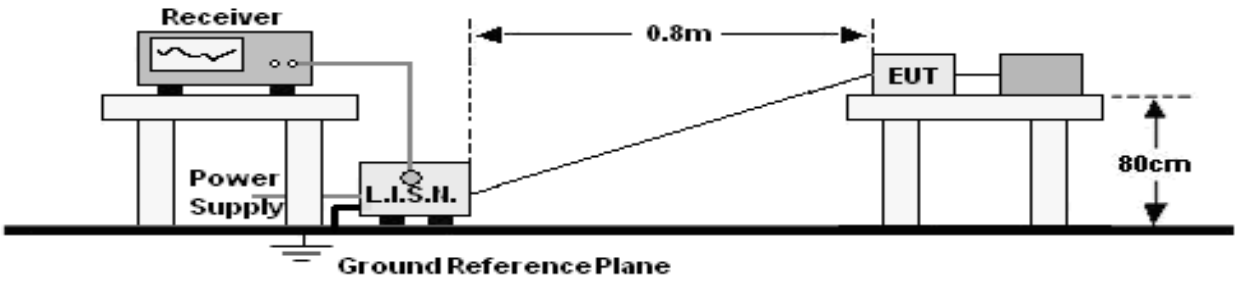

6.2 Limit

FREQUENCY (MHz)	Limit (dBuV)	
	Quas-peak	Average
0.15 -0.5	66 - 56 *	56 - 46 *
0.50 -5.0	56.00	46.00
5.0 -30.0	60.00	50.00
Notes: 1. *Decreasing linearly with logarithm of frequency. 2. The lower limit shall apply at the transition frequencies.		

6.3 Test Procedure

Receiver Parameters	Setting
Attenuation	10 dB
Start Frequency	0.15 MHz
Stop Frequency	30 MHz
IF Bandwidth	9 kHz

a. The Product was placed on a nonconductive table 0.8 m above the horizontal ground reference plane, and 0.4 m from the vertical ground reference plane, and connected to the main through Line Impedance Stability Network (L.I.S.N).
b. The RBW of the receiver was set at 9 kHz in 150 kHz ~ 30MHz with Peak and AVG detector in Max Hold mode. Run the receiver's pre-scan to record the maximum disturbance generated from Product in all power lines in the full band.
c. For each frequency whose maximum record was higher or close to limit, measure its QP and AVG values and record.

6.4 EUT Operating Conditions

The EUT was configured for testing in a typical fashion (as a customer would normally use it). The EUT has been programmed to continuously transmit during test. This operating condition was tested and used to collect the included data.

6.5 Test Result

Temperature:	24.3 ℃	Relative Humidity:	55%RH
Pressure:	101KPa	Phase :	L
Test Mode:	Mode 4	Test Voltage :	AC120V/60Hz

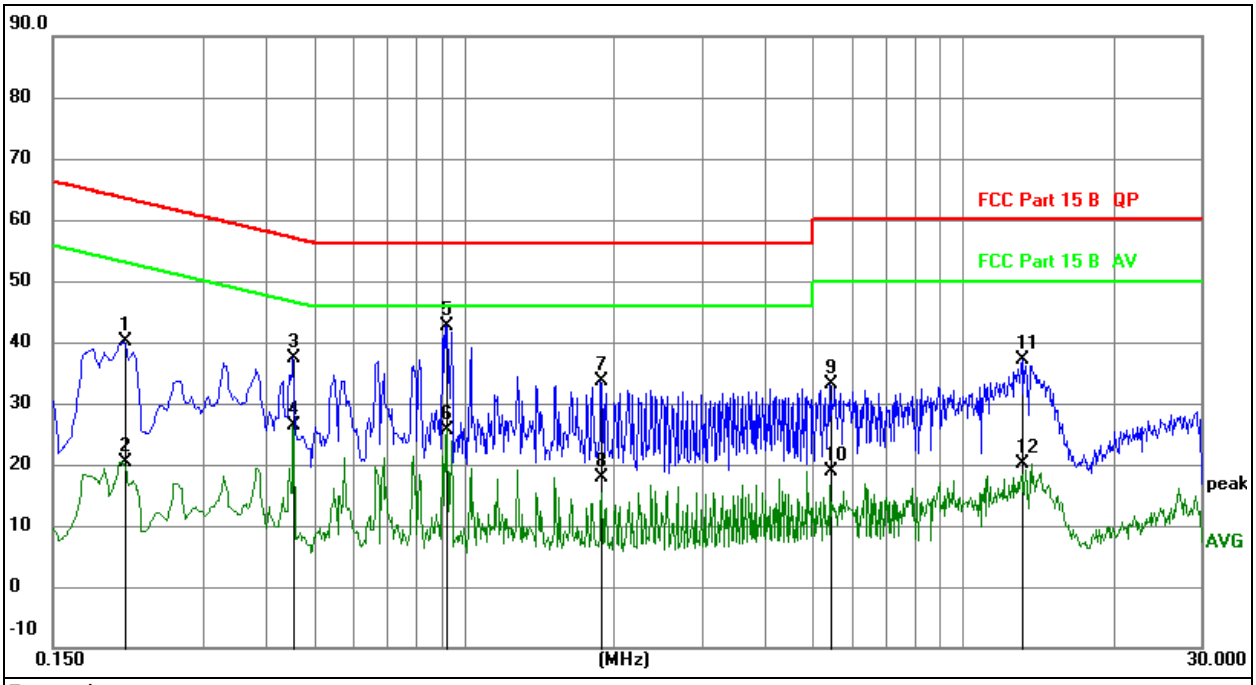

Remark:
1. All readings are Quasi-Peak and Average values.
2. Factor = Insertion Loss + Cable Loss.
3. Measurement=Reading Level+ Correct Factor
4. Over=Measurement-Limit

No.	Mk.	Freq.	Reading Level	Correct Factor	Measure-ment	Limit	Over	
		MHz		dB	dBuV	dBuV	dB	Detector
1		0.2085	20.00	20.07	40.07	63.26	-23.19	QP
2		0.2085	0.35	20.07	20.42	53.26	-32.84	AVG
3		0.4560	17.24	20.08	37.32	56.77	-19.45	QP
4		0.4560	6.42	20.08	26.50	46.77	-20.27	AVG
5	*	0.9194	22.61	20.09	42.70	56.00	-13.30	QP
6		0.9194	5.66	20.09	25.75	46.00	-20.25	AVG
7		1.8869	13.56	20.10	33.66	56.00	-22.34	QP
8		1.8869	-2.22	20.10	17.88	46.00	-28.12	AVG
9		5.4330	13.06	20.15	33.21	60.00	-26.79	QP
10		5.4330	-1.25	20.15	18.90	50.00	-31.10	AVG
11		13.1460	16.85	20.26	37.11	60.00	-22.89	QP
12		13.1460	-0.06	20.26	20.20	50.00	-29.80	AVG

Temperature:	24.3 ℃	Relative Humidity:	55%RH
Pressure:	101KPa	Phase :	N
Test Mode:	Mode 4	Test Voltage :	AC120V/60Hz

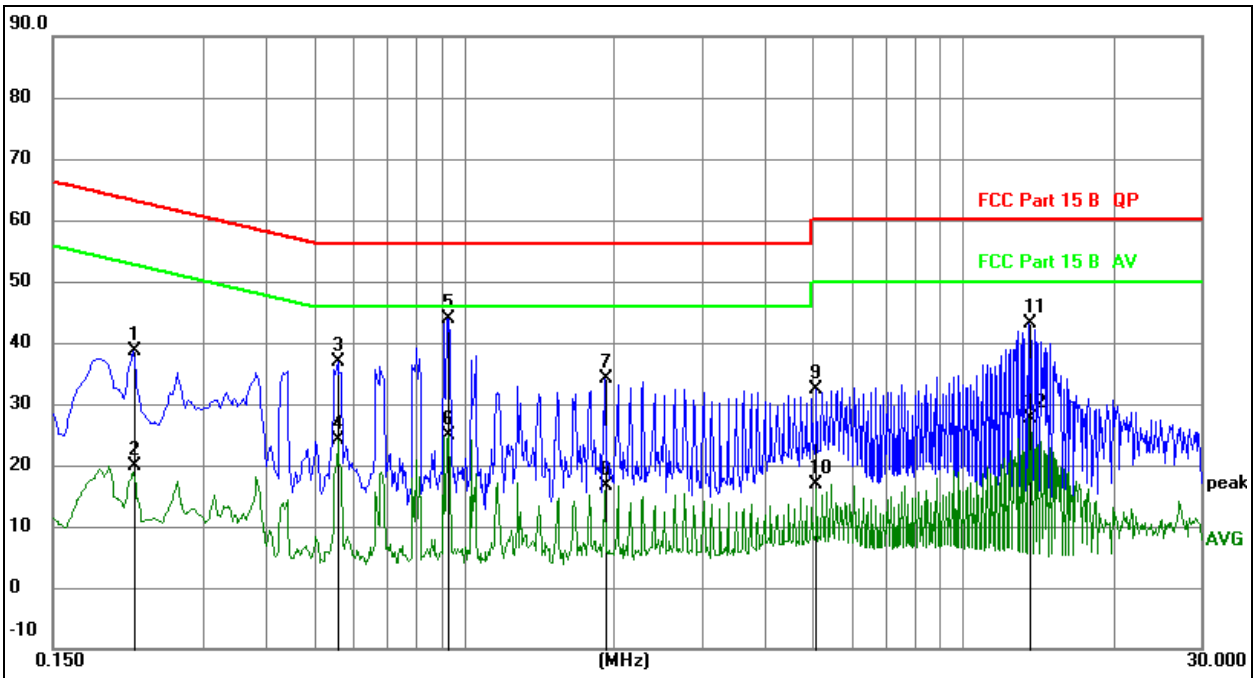

Remark:
1. All readings are Quasi-Peak and Average values.
2. Factor = Insertion Loss + Cable Loss.
3. Measurement=Reading Level+ Correct Factor
4. Over=Measurement-Limit

No.	Mk.	Freq.	Reading Level	Correct Factor	Measure-ment	Limit	Over	
		MHz		dB	dBuV	dBuV	dB	Detector
1		0.2174	18.49	20.07	38.56	62.92	-24.36	QP
2		0.2174	-0.12	20.07	19.95	52.92	-32.97	AVG
3		0.5581	16.92	20.08	37.00	56.00	-19.00	QP
4		0.5581	4.13	20.08	24.21	46.00	-21.79	AVG
5	*	0.9331	23.88	20.09	43.97	56.00	-12.03	QP
6		0.9331	4.90	20.09	24.99	46.00	-21.01	AVG
7		1.9182	14.05	20.10	34.15	56.00	-21.85	QP
8		1.9182	-3.44	20.10	16.66	46.00	-29.34	AVG
9		5.0848	12.15	20.15	32.30	60.00	-27.70	QP
10		5.0848	-3.32	20.15	16.83	50.00	-33.17	AVG
11		13.5509	22.90	20.27	43.17	60.00	-16.83	QP
12		13.5509	7.27	20.27	27.54	50.00	-22.46	AVG

7. Radiated Emissions

7.1 Block Diagram Of Test Setup

（A）Radiated Emission Test-Up Frequency Below 30MHz

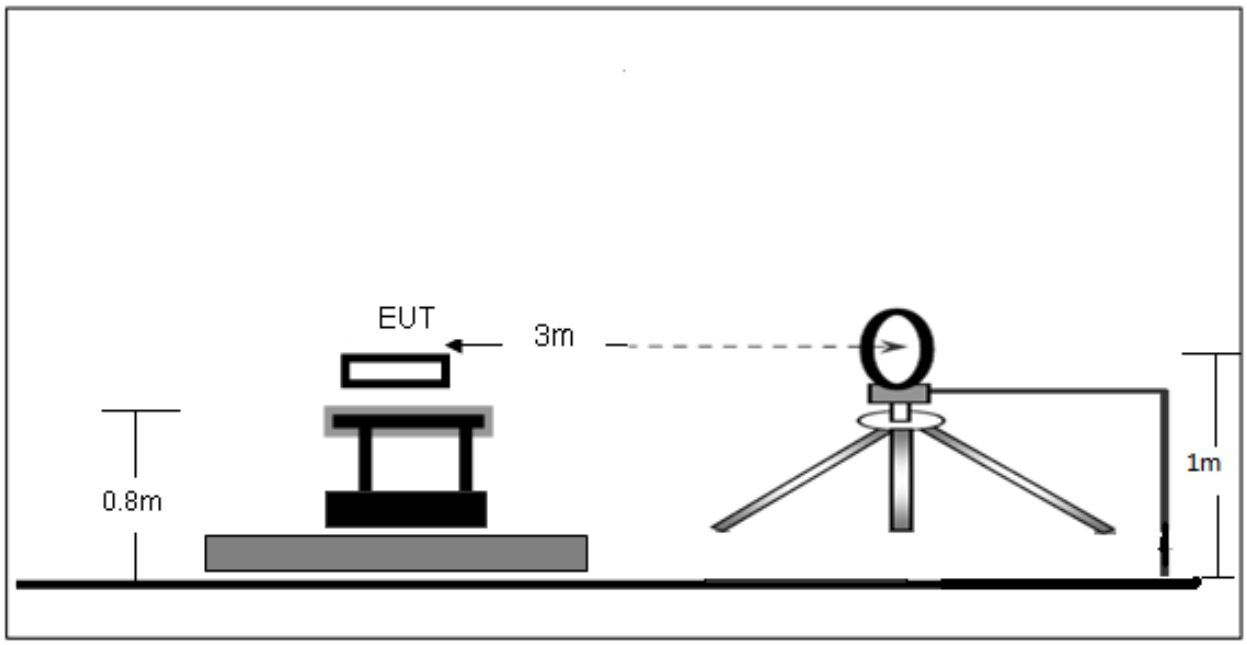

（B）Radiated Emission Test-Up Frequency 30MHz~1GHz

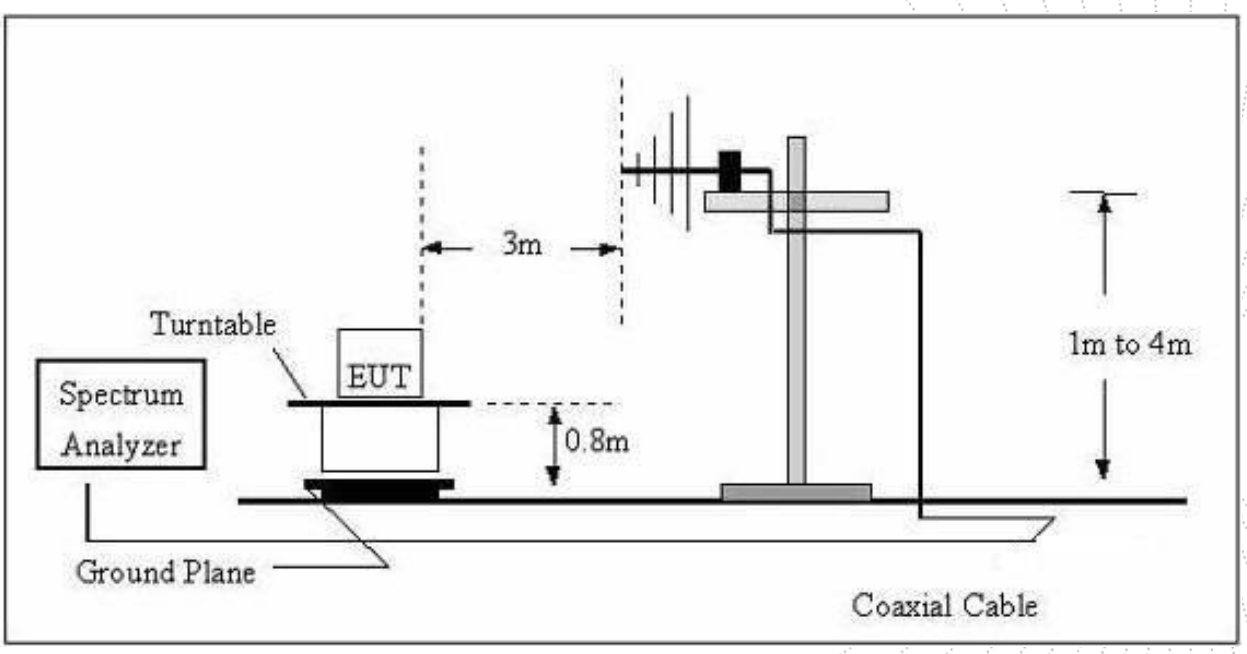

（C）Radiated Emission Test-Up Frequency Above 1GHz

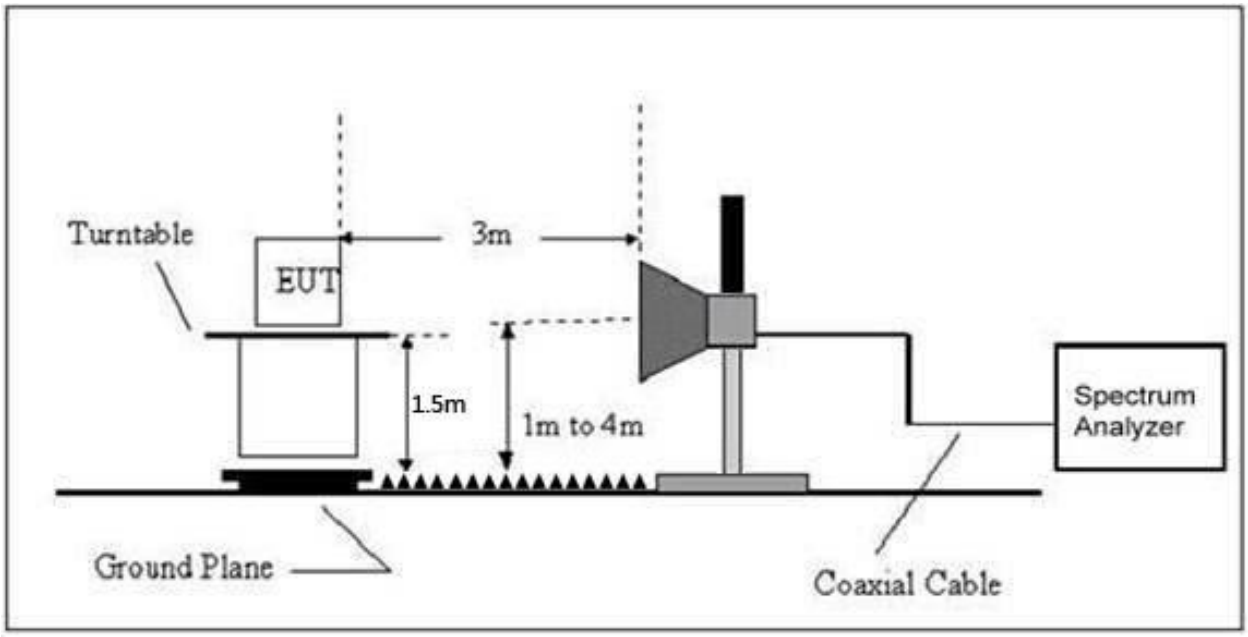

7.2 Limit

20dBc in any 100 kHz bandwidth outside the operating frequency band. In case the emission fall within the restricted band specified on 15.205(a), then the 15.209(a) limit in the table below has to be followed.

Frequency	Field Strength	Distance	Field Strength Limit at 3m Distance	
(MHz)	uV/m	(m)	uV/m	dBuV/m
0.009 ~ 0.490	2400/F(kHz)	300	10000 * 2400/F(kHz)	$20\log^{(2400/F(kHz))} + 80$
0.490 ~ 1.705	24000/F(kHz)	30	100 * 24000/F(kHz)	$20\log^{(24000/F(kHz))} + 40$
1.705 ~ 30	30	30	100 * 30	$20\log^{(30)} + 40$
30 ~ 88	100	3	100	$20\log^{(100)}$
88 ~ 216	150	3	150	$20\log^{(150)}$
216 ~ 960	200	3	200	$20\log^{(200)}$
Above 960	500	3	500	$20\log^{(500)}$

LIMITS OF RADIATED EMISSION MEASUREMENT (Above 1000MHz)

FREQUENCY (MHz)	Limit (dBuV/m) (at 3M)	
	PEAK	AVERAGE
Above 1000	74	54

Notes:
(1) The limit for radiated test was performed according to FCC PART 15C.
(2) The tighter limit applies at the band edges.
(3) Emission level (dBuV/m)=20log Emission level (uV/m).

FREQUENCY RANGE OF RADIATED MEASUREMENT (For unintentional radiators)

Highest frequency generated or Upper frequency of measurement used in the device or on which the device operates or tunes (MHz)	Range (MHz)
Below 1.705	30
1.705 – 108	1000
108 – 500	2000
500 – 1000	5000
Above 1000	5th harmonic of the highest frequency or 40 GHz, whichever is lower

7.3 Test Procedure

Receiver Parameter	Setting
Attenuation	Auto
9kHz~150kHz	RBW 200Hz for QP
150kHz~30MHz	RBW 9kHz for QP
30MHz~1000MHz	RBW 120kHz for QP

Spectrum Parameter	Setting
1-25GHz	RBW 1 MHz /VBW 1 MHz for Peak, RBW 1 MHz / VBW 10Hz for Average

Below 1GHz test procedure as below:
a. The EUT was placed on the top of a rotating table 0.8 meters above the ground at a 3 meter semi-anechoic chamber. The table was rotated 360 degrees to determine the position of the highest radiation.
b. The EUT was set 3 meters away from the interference-receiving antenna, which was mounted on the top of a variable-height antenna tower.
c. The antenna height is varied from one meter to four meters above the ground to determine the maximum value of the field strength. Both horizontal and vertical polarizations of the antenna are set to make the measurement.
d. For each suspected emission, the EUT was arranged to its worst case and then the antenna was tuned to heights from 1 meter to 4 meters (for the test frequency of below 30MHz, the antenna was tuned to heights 1 meter) and the rotatable table was turned from 0 degrees to 360 degrees to find the maximum reading.
e. The test-receiver system was set to Peak Detect Function and Specified Bandwidth with Maximum Hold Mode.
f. If the emission level of the EUT in peak mode was 10dB lower than the limit specified, then testing could be stopped and the peak values of the EUT would be reported. Otherwise the emissions that did not have 10dB margin would be re-tested one by one using peak, quasi-peak or average method as specified and then reported in a data sheet.
Above 1GHz test procedure as below:
g. Different between above is the test site, change from Semi- Anechoic Chamber to fully Anechoic Chamber and change form table 0.8 metre to 1.5 metre(Above 18GHz the distance is 1 meter and table is 1.5 metre).
h. Test the EUT in the lowest channel, the middle channel, the Highest channel.
Note:
Both horizontal and vertical antenna polarities were tested and performed pretest to three orthogonal axis. The worst case emissions were reported.

Above 1GHz test procedure as below:
a. The EUT was placed on the top of a rotating table 1.5 meters above the ground at a 3 meter chamber. The table was rotated 360 degrees to determine the position of the highest radiation.
b. The EUT was set 3 meters away from the interference-receiving antenna, which was mounted on the top of a variable-height antenna tower.
c. The antenna height is varied from one meter to four meters above the ground to determine the maximum value of the field strength. Both horizontal and vertical polarizations of the antenna are set to make the measurement.
d. For each suspected emission, the EUT was arranged to its worst case and then the antenna was tuned to heights from 1 meter to 4 meters and the rota table was turned from 0 degrees to 360 degrees to find the maximum reading.
e. The test-receiver system was set to Peak Detect Function and Specified Bandwidth with Maximum Hold Mode.
f. If the emission level of the EUT in peak mode was 10dB lower than the limit specified, then testing could be stopped and the peak values of the EUT would be reported. Otherwise the emissions that did not have 10dB margin would be re-tested one by one using peak, quasi-peak or average method as specified and then reported in a data sheet.
g. Test the EUT in the lowest channel, the Highest channel.
Note:
Both horizontal and vertical antenna polarities were tested and performed pretest to three orthogonal axis. The worst case emissions were reported.

7.4 EUT Operating Conditions

The EUT was configured for testing in a typical fashion (as a customer would normally use it). The EUT has been programmed to continuously transmit during test. This operating condition was tested and used to collect the included data.

7.5 Test Result

Below 30MHz

Temperature:	24.3 ℃	Relative Humidity:	57%RH
Pressure:	101KPa	Test Voltage :	DC 5V
Test Mode:	Mode 4	Polarization :	--

Freq.	Reading	Limit	Margin	State
(MHz)	(dBuV/m)	(dBuV/m)	(dB)	P/F
--	--	--	--	PASS
--	--	--	--	PASS

Note:
The amplitude of spurious emissions which are attenuated by more than 20dB below the permissible value has no need to be reported.
Distance extrapolation factor =40 log (specific distance/test distance)(dB);
Limit line = specific limits(dBuv) + distance extrapolation factor.

Between 30MHz – 1GHz

Temperature:	24.9 ℃	Relative Humidity:	60%RH
Pressure:	101KPa	Phase :	Horizontal
Test Mode:	Mode 4	Test Voltage :	DC 5V

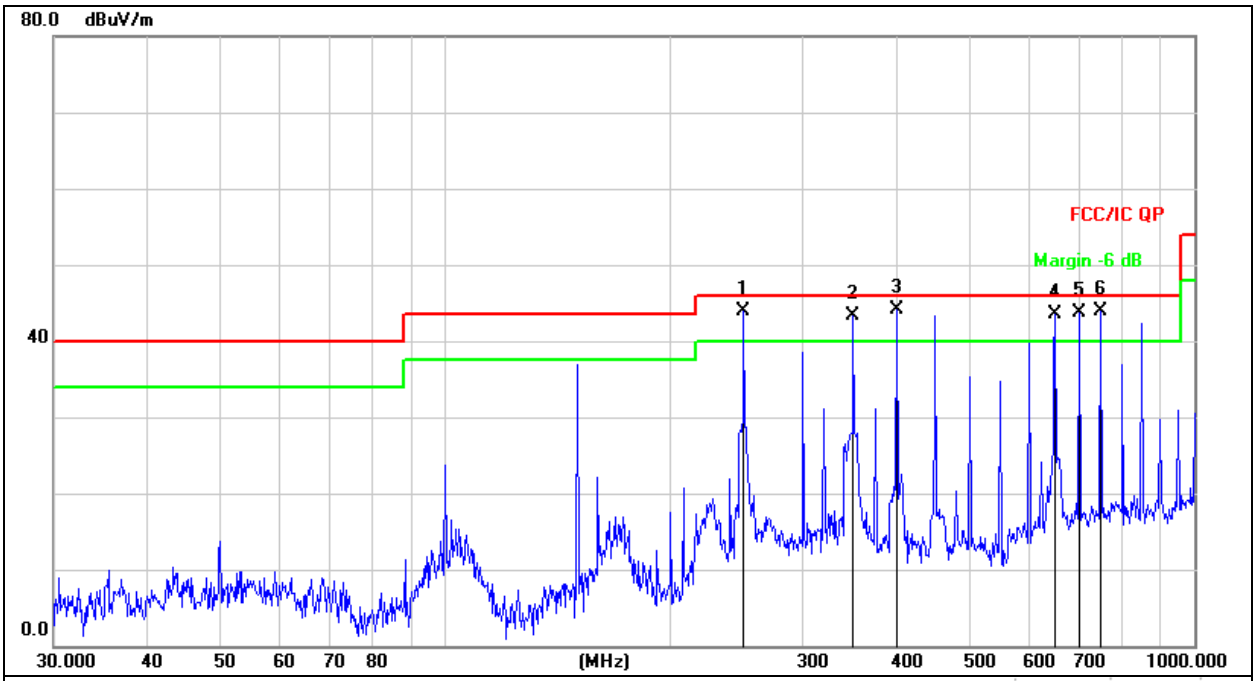

Remark:
1. Factor = Antenna Factor + Cable Loss – Pre-amplifier.
2. Measurement=Reading Level+ Correct Factor
3. Over=Measurement-Limit

No.	Mk.	Freq.	Reading Level	Correct Factor	Measure-ment	Limit	Over	
		MHz	dBuV	dB	dBuV/m	dB/m	dB	Detector
1	!	250.3010	58.23	-14.28	43.95	46.00	-2.05	QP
2	!	350.4768	54.81	-11.47	43.34	46.00	-2.66	QP
3	*	400.4318	54.90	-10.83	44.07	46.00	-1.93	QP
4	!	651.9415	49.73	-6.14	43.59	46.00	-2.41	QP
5	!	701.7607	49.31	-5.68	43.63	46.00	-2.37	QP
6	!	750.1082	48.90	-4.99	43.91	46.00	-2.09	QP

Temperature:	24.9 ℃	Relative Humidity:	60%RH
Pressure:	101KPa	Phase :	Vertical
Test Mode:	Mode 4	Test Voltage :	DC 5V

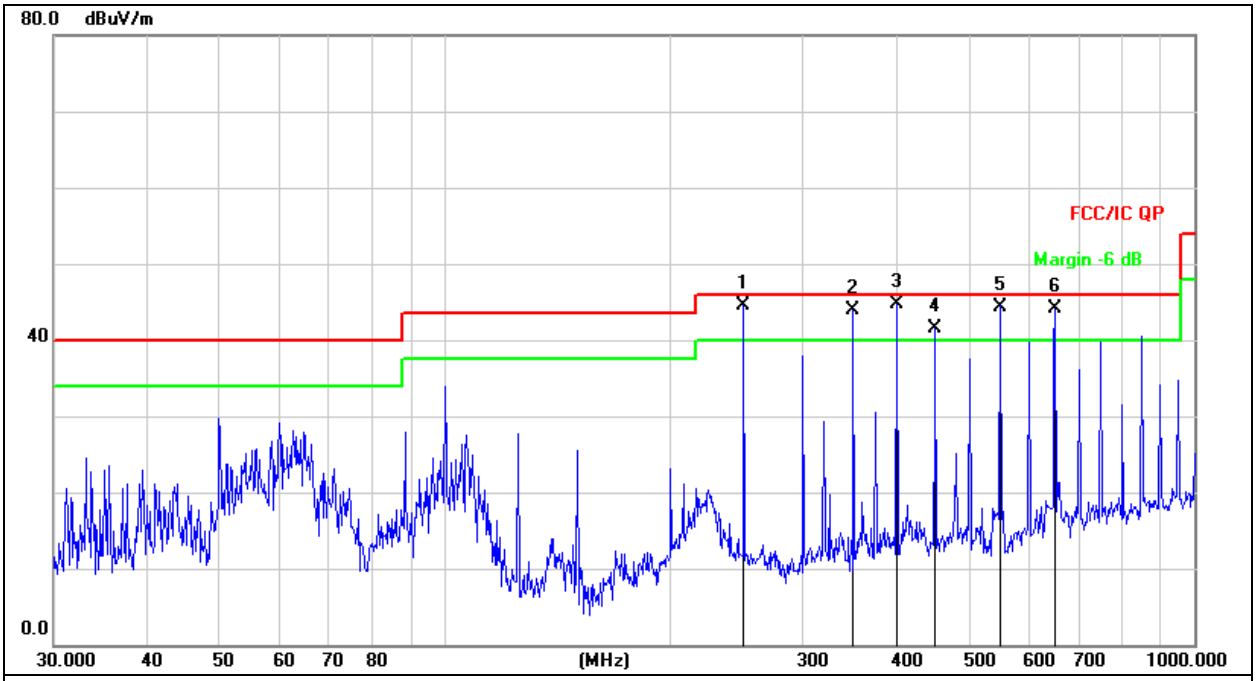

Remark:
1. Factor = Antenna Factor + Cable Loss – Pre-amplifier.
2. Measurement=Reading Level+ Correct Factor
3. Over=Measurement-Limit

No.	Mk.	Freq.	Reading Level	Correct Factor	Measure-ment	Limit	Over	
		MHz	dBuV	dB	dBuV/m	dB/m	dB	Detector
1	!	250.3010	58.83	-14.28	44.55	46.00	-1.45	QP
2	!	350.4768	55.42	-11.47	43.95	46.00	-2.05	QP
3	*	400.4318	55.51	-10.83	44.68	46.00	-1.32	QP
4	!	451.1349	51.31	-9.83	41.48	46.00	-4.52	QP
5	!	550.9479	54.72	-10.32	44.40	46.00	-1.60	QP
6	!	651.9415	50.15	-6.14	44.01	46.00	-1.99	QP

Between 1GHz – 25GHz

O-QPSK							
Polar (H/V)	**Fre-quency (MHz)**	**Reading Level (dBuV/m)**	**Correct Factor (dB)**	**Measure-ment (dBuV/m)**	**Limits (dBuV/m)**	**Over (dB)**	**Detector Type**
Low channel							
V	4810.00	70.85	-19.98	50.87	74.00	-23.13	PK
V	4810.00	61.65	-19.98	41.67	54.00	-12.33	AV
V	7215.00	60.02	-14.20	45.82	74.00	-28.18	PK
V	7215.00	49.26	-14.20	35.06	54.00	-18.94	AV
H	4810.00	66.64	-19.98	46.66	74.00	-27.34	PK
H	4810.00	56.84	-19.98	36.86	54.00	-17.14	AV
H	7215.00	57.57	-14.20	43.37	74.00	-30.63	PK
H	7215.00	49.78	-14.20	35.58	54.00	-18.42	AV
Middle channel							
V	4880.00	67.45	-19.84	47.61	74.00	-26.39	PK
V	4880.00	60.03	-19.84	40.19	54.00	-13.81	AV
V	7320.00	58.01	-13.90	44.11	74.00	-29.89	PK
V	7320.00	49.82	-13.90	35.92	54.00	-18.08	AV
H	4880.00	63.08	-19.84	43.24	74.00	-30.76	PK
H	4880.00	52.90	-19.84	33.06	54.00	-20.94	AV
H	7320.00	56.41	-13.90	42.51	74.00	-31.49	PK
H	7320.00	48.08	-13.90	34.18	54.00	-19.82	AV
High channel							
V	4960.00	70.35	-19.68	50.67	74.00	-23.33	PK
V	4960.00	60.60	-19.68	40.92	54.00	-13.08	AV
V	7440.00	62.56	-13.57	48.99	74.00	-25.01	PK
V	7440.00	53.45	-13.57	39.88	54.00	-14.12	AV
H	4960.00	68.51	-19.68	48.83	74.00	-25.17	PK
H	4960.00	59.09	-19.68	39.41	54.00	-14.59	AV
H	7440.00	59.77	-13.57	46.20	74.00	-27.80	PK
H	7440.00	51.47	-13.57	37.90	54.00	-16.10	AV

Remark:
1.Measurement = Reading Level + Correct Factor,
Correct Factor = Antenna Factor + Cable Loss – Pre-amplifier,
Over= Measurement – Limit
2.If peak below the average limit, the average emission was no test.
3. In restricted bands of operation, The spurious emissions below the permissible value more than 20dB
4. The amplitude of spurious emissions which are attenuated by more than 20dB below the permissible value has no need to be reported.

8. Radiated Band Emission Measurement And Restricted Bands Of Operation

8.1 Block Diagram Of Test Setup

Radiated Emission Test-Up Frequency Above 1GHz

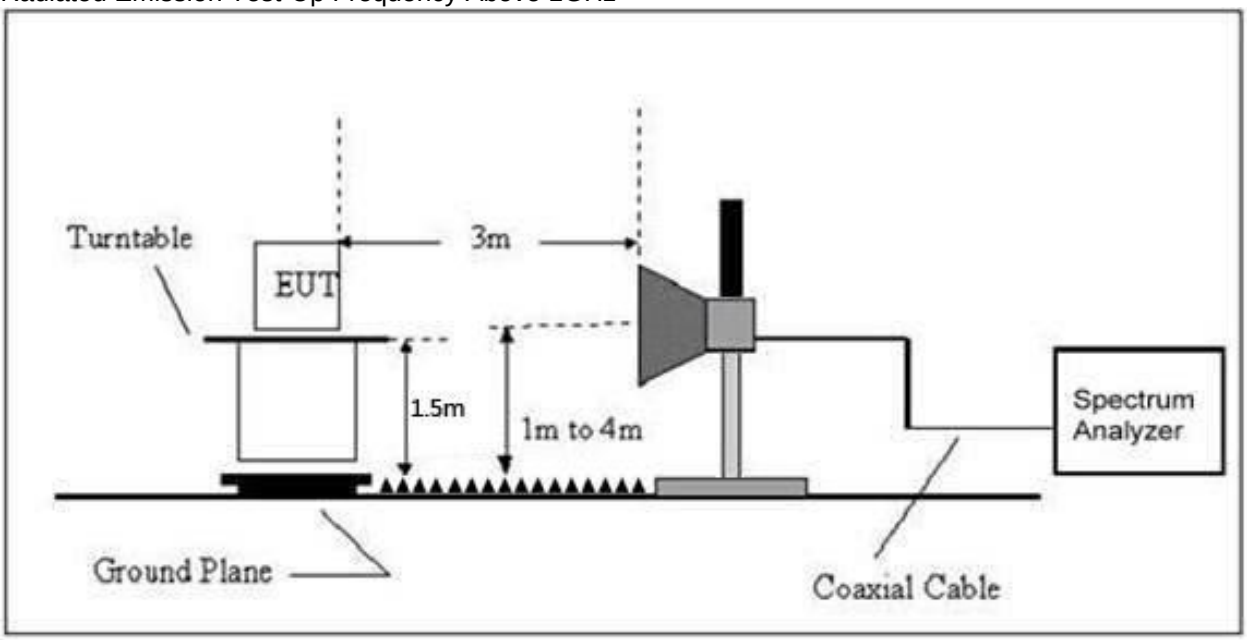

8.2 Limit

FCC Part15 C Section 15.209 and 15.205

(a) Except as shown in paragraph (d) of this section, only spurious emissions are permitted in any of the frequency bands listed below:

MHz	MHz	MHz	GHz
0.090-0.110	16.42-16.423	399.9-410	4.5-5.15
[1]0.495-0.505	16.69475-16.69525	608-614	5.35-5.46
2.1735-2.1905	16.80425-16.80475	960-1240	7.25-7.75
4.125-4.128	25.5-25.67	1300-1427	8.025-8.5
4.17725-4.17775	37.5-38.25	1435-1626.5	9.0-9.2
4.20725-4.20775	73-74.6	1645.5-1646.5	9.3-9.5
6.215-6.218	74.8-75.2	1660-1710	10.6-12.7
6.26775-6.26825	108-121.94	1718.8-1722.2	13.25-13.4
6.31175-6.31225	123-138	2200-2300	14.47-14.5
8.291-8.294	149.9-150.05	2310-2390	15.35-16.2
8.362-8.366	156.52475-156.52525	2483.5-2500	17.7-21.4
8.37625-8.38675	156.7-156.9	2690-2900	22.01-23.12
8.41425-8.41475	162.0125-167.17	3260-3267	23.6-24.0
12.29-12.293	167.72-173.2	3332-3339	31.2-31.8
12.51975-12.52025	240-285	3345.8-3358	36.43-36.5
12.57675-12.57725	322-335.4	3600-4400	([2])
13.36-13.41			

LIMITS OF RADIATED EMISSION MEASUREMENT (Above 1000MHz)

FREQUENCY (MHz)	Limit (dBuV/m) (at 3M)	
	PEAK	AVERAGE
Above 1000	74	54

Notes:
(1) The limit for radiated test was performed according to FCC PART 15C.
(2) The tighter limit applies at the band edges.
(3) Emission level (dBuV/m)=20log Emission level (uV/m).

8.3 Test Procedure

Receiver Parameter	Setting
Attenuation	Auto
Start Frequency	2300MHz
Stop Frequency	2520
RB / VB (emission in restricted band)	1 MHz / 1 MHz for Peak, 1 MHz / 10Hz for Average

Above 1GHz test procedure as below:
a. The EUT was placed on the top of a rotating table 1.5 meters above the ground at a 3 meter chamber. The table was rotated 360 degrees to determine the position of the highest radiation.
b. The EUT was set 3 meters away from the interference-receiving antenna, which was mounted on the top of a variable-height antenna tower.
c. The antenna height is varied from one meter to four meters above the ground to determine the maximum value of the field strength. Both horizontal and vertical polarizations of the antenna are set to make the measurement.
d. For each suspected emission, the EUT was arranged to its worst case and then the antenna was tuned to heights from 1 meter to 4 meters and the rota table was turned from 0 degrees to 360 degrees to find the maximum reading.
e. The test-receiver system was set to Peak Detect Function and Specified Bandwidth with Maximum Hold Mode.
f. If the emission level of the EUT in peak mode was 10dB lower than the limit specified, then testing could be stopped and the peak values of the EUT would be reported. Otherwise the emissions that did not have 10dB margin would be re-tested one by one using peak, quasi-peak or average method as specified and then reported in a data sheet.
g. Test the EUT in the lowest channel, the Highest channel.
Note:
Both horizontal and vertical antenna polarities were tested and performed pretest to three orthogonal axis. The worst case emissions were reported.

8.4 EUT operating Conditions

The EUT was configured for testing in a typical fashion (as a customer would normally use it). The EUT has been programmed to continuously transmit during test. This operating condition was tested and used to collect the included data.

8.5 Test Result

	Polar (H/V)	Frequency (MHz)	Reading Level (dBuV/m)	Correct Factor (dB)	Measure-ment (dBuV/m)	Limits (dBuV/m)		Result
					PK	PK	AV	
O-QPSK	Low Channel 2405MHz							
	H	2390.00	73.08	-25.43	47.65	74.00	54.00	PASS
	H	2400.00	74.71	-25.40	49.31	74.00	54.00	PASS
	V	2390.00	73.37	-25.43	47.94	74.00	54.00	PASS
	V	2400.00	73.59	-25.40	48.19	74.00	54.00	PASS
	High Channel 2480MHz							
	H	2483.50	73.50	-25.15	48.35	74.00	54.00	PASS
	H	2500.00	68.38	-25.10	43.28	74.00	54.00	PASS
	V	2483.50	72.11	-25.15	46.96	74.00	54.00	PASS
	V	2500.00	68.03	-25.10	42.93	74.00	54.00	PASS

Remark:
1.Measurement = Reading Level + Correct Factor,
Correct Factor = Antenna Factor + Cable Loss – Pre-amplifier,
Over= Measurement – Limit
2. If the PK measured levels comply with average limit, then the average level were deemed to comply with average limit.
3 In restricted bands of operation, The spurious emissions below the permissible value more than 20dB
4. The amplitude of spurious emissions which are attenuated by more than 20dB below the permissible value has no need to be reported.

9. Power Spectral Density Test

9.1 Block Diagram Of Test Setup

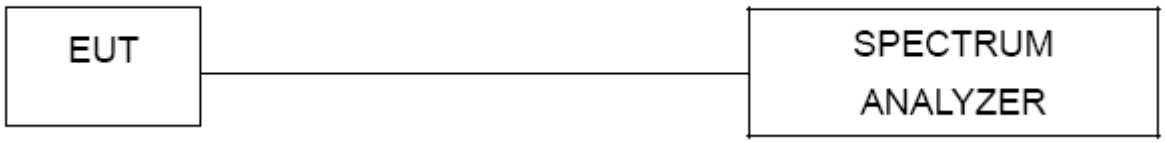

9.2 Limit

FCC Part15 (15.247) , Subpart C				
Section	**Test Item**	**Limit**	**Frequency Range (MHz)**	**Result**
15.247	Power Spectral Density	8 dBm (in any 3KHz)	2400-2483.5	PASS

LIMITS OF RADIATED EMISSION MEASUREMENT (Above 1000MHz)

9.3 Test Procedure

1. Set analyzer center frequency to DTS channel center frequency.
2. Set the span to 1.5 times the DTS bandwidth.
3. Set the RBW to: 3 kHz
4. Set the VBW ≥ 3 x RBW.
5. Detector = peak.
6. Sweep time = auto couple.
7. Trace mode = max hold.
8. Allow trace to fully stabilize.
9. Use the peak marker function to determine the maximum amplitude level within the RBW.
10. If measured value exceeds limit, reduce RBW (no less than 3 kHz) and repeat.

9.4 EUT Operating Conditions

The EUT tested system was configured as the statements of 4.6 Unless otherwise a special operating condition is specified in the follows during the testing.
Note: Power Spectral Density(dBm)=Reading+Cable Loss

9.5 Test Result

Temperature;	26℃	Relative Humidity:	54%
Test Mode:	O-QPSK	Test Voltage:	DC 5V

Condition	Mode	Frequency (MHz)	Conducted PSD (dBm/3kHz)	Limit (dBm/3kHz)	Verdict
NVNT	O-QPSK	2405	-15.15	8	Pass
NVNT	O-QPSK	2440	-13.86	8	Pass
NVNT	O-QPSK	2480	-14.92	8	Pass

Test Graphs

PSD NVNT 2405MHz

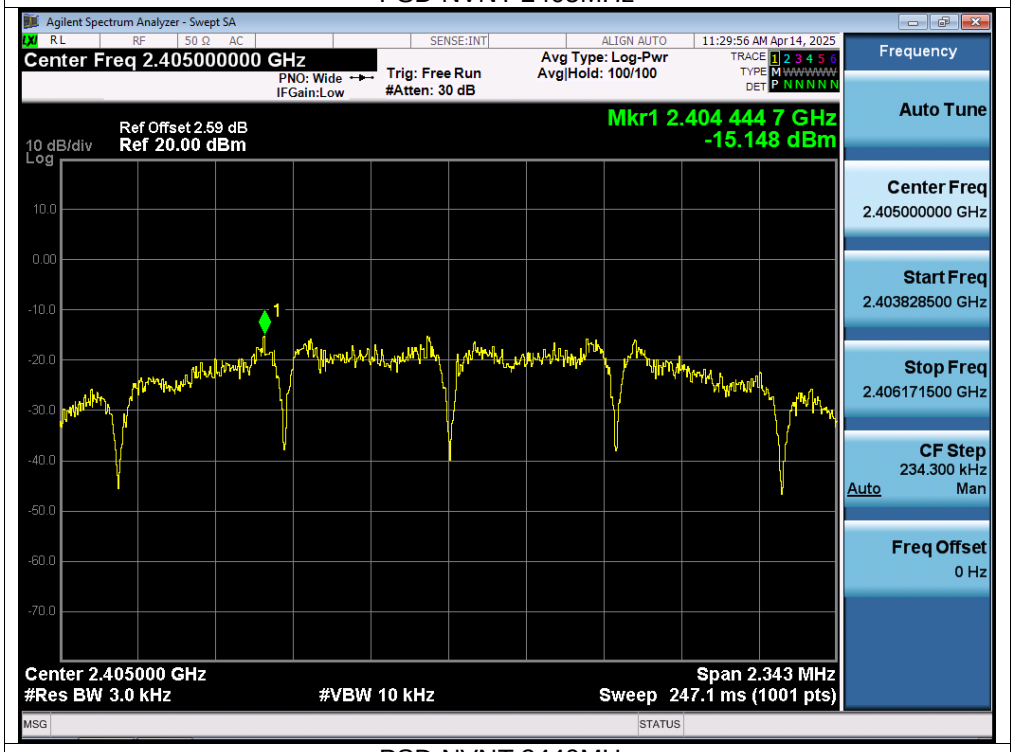

PSD NVNT 2440MHz

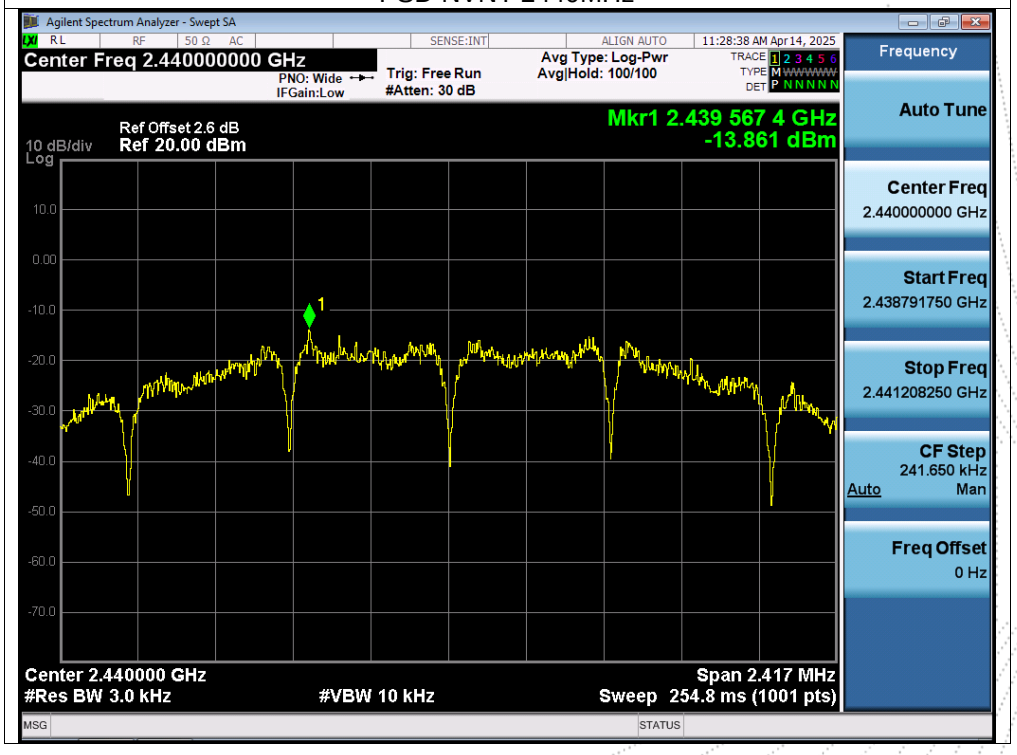

PSD NVNT 2480MHz

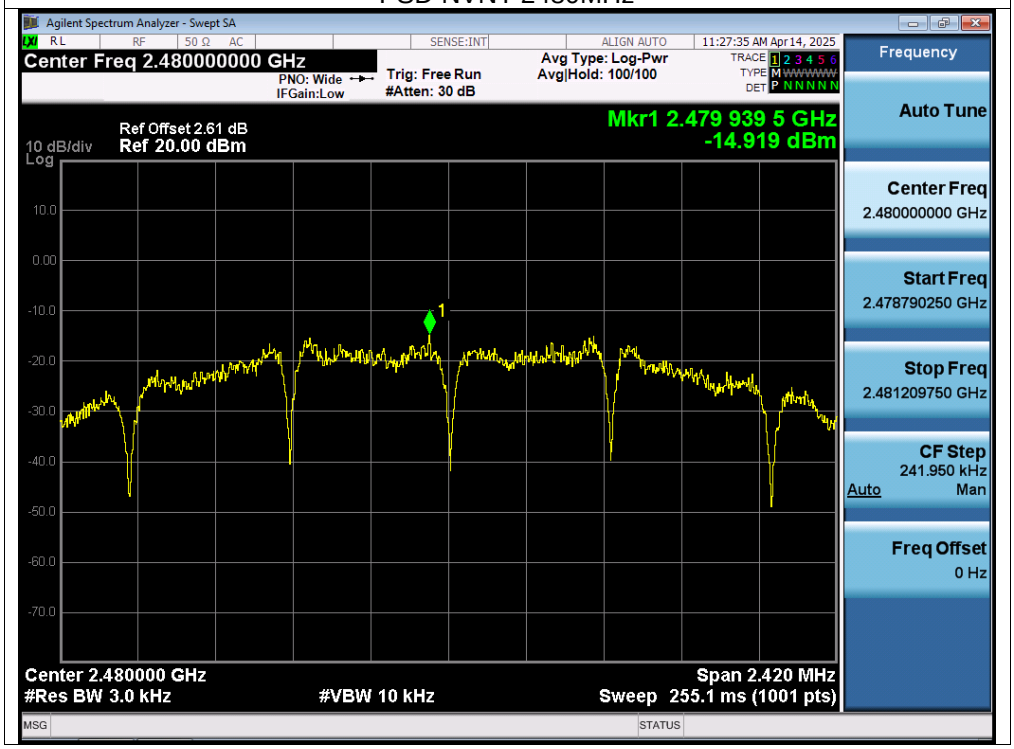

10. Bandwidth Test

10.1 Block Diagram Of Test Setup

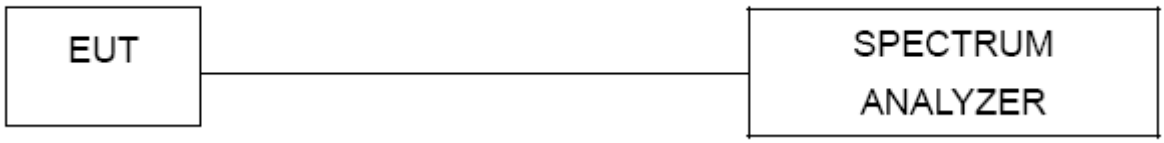

10.2 Limit

FCC Part15 (15.247) , Subpart C				
Section	**Test Item**	**Limit**	**Frequency Range (MHz)**	**Result**
15.247(a)(2)	Bandwidth	>= 500KHz (6dB bandwidth)	2400-2483.5	PASS

10.3 Test Procedure

1. Set RBW = 100 kHz.
2. Set the video bandwidth (VBW) ≥ 3 x RBW.
3. Detector = Peak.
4. Trace mode = max hold.
5. Sweep = auto couple.
6. Allow the trace to stabilize.
7. Measure the maximum width of the emission that is constrained by the frequencies associated with the two outermost amplitude points (upper and lower frequencies) that are attenuated by 6 dB relative to the maximum level measured in the fundamental emission.

10.4 EUT Operating Conditions

The EUT tested system was configured as the statements of 4.6 Unless otherwise a special operating condition is specified in the follows during the testing.
Note: Power Spectral Density(dBm)=Reading+Cable Loss

10.5 Test Result

Temperature;	26℃	Relative Humidity:	54%
Test Mode:	O-QPSK	Test Voltage:	DC 5V

Condition	Mode	Frequency (MHz)	-6 dB Bandwidth (MHz)	Limit -6 dB Bandwidth (MHz)	Verdict
NVNT	O-QPSK	2405	1.562	0.5	Pass
NVNT	O-QPSK	2440	1.611	0.5	Pass
NVNT	O-QPSK	2480	1.613	0.5	Pass

Test Graphs

-6dB Bandwidth NVNT 2405MHz

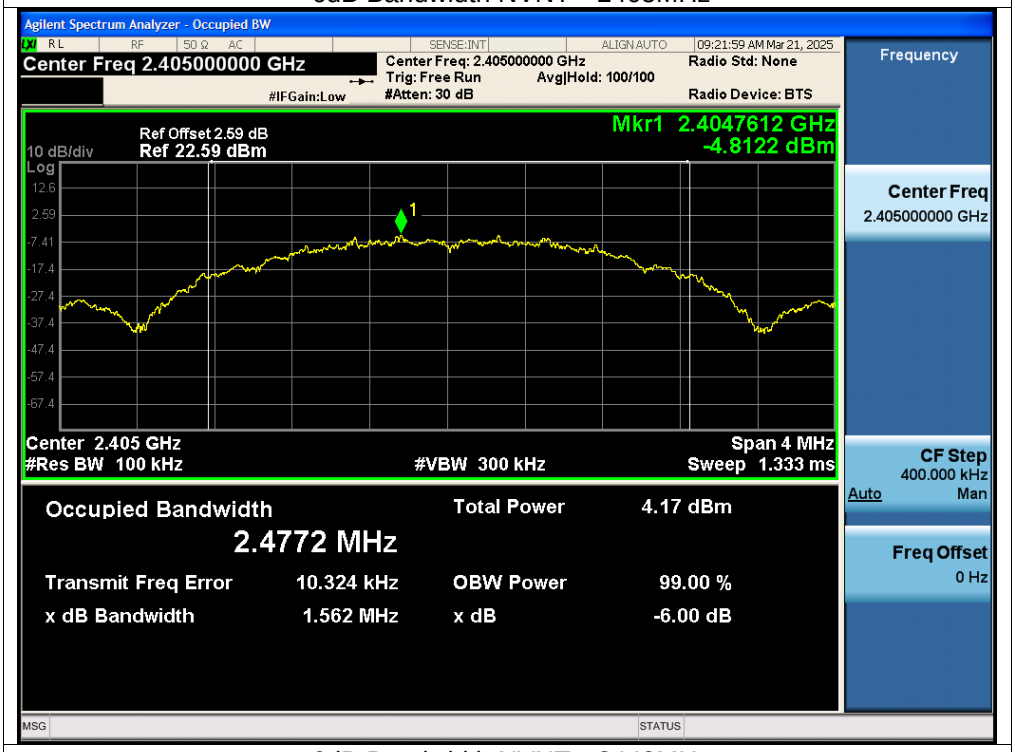

-6dB Bandwidth NVNT 2440MHz

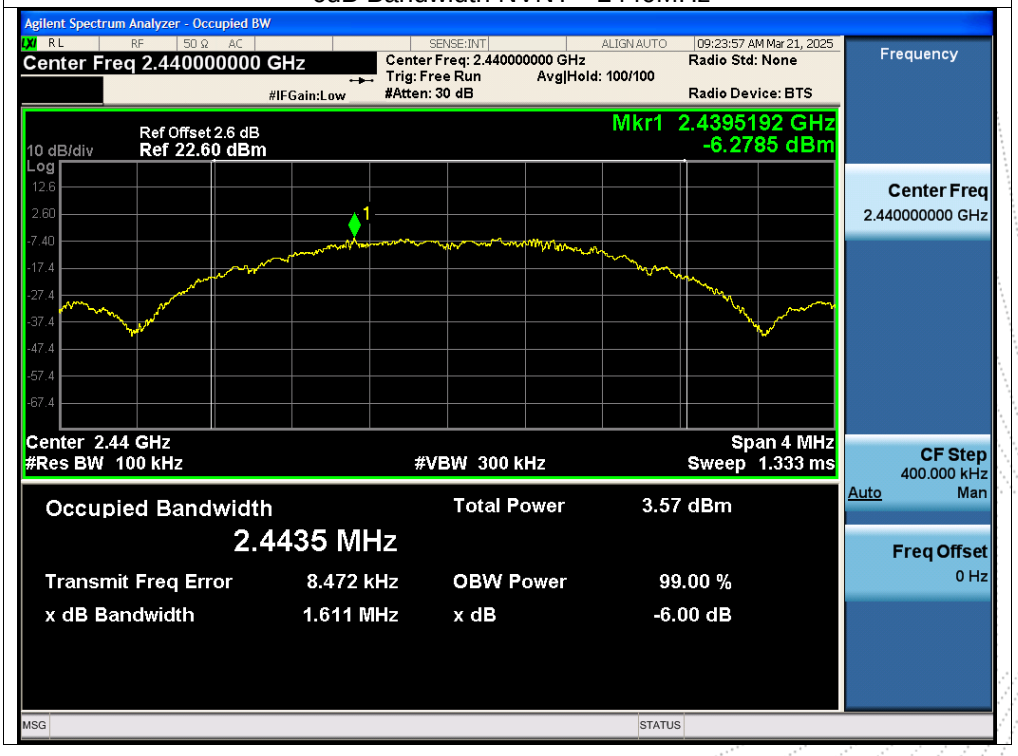

-6dB Bandwidth NVNT 2480MHz

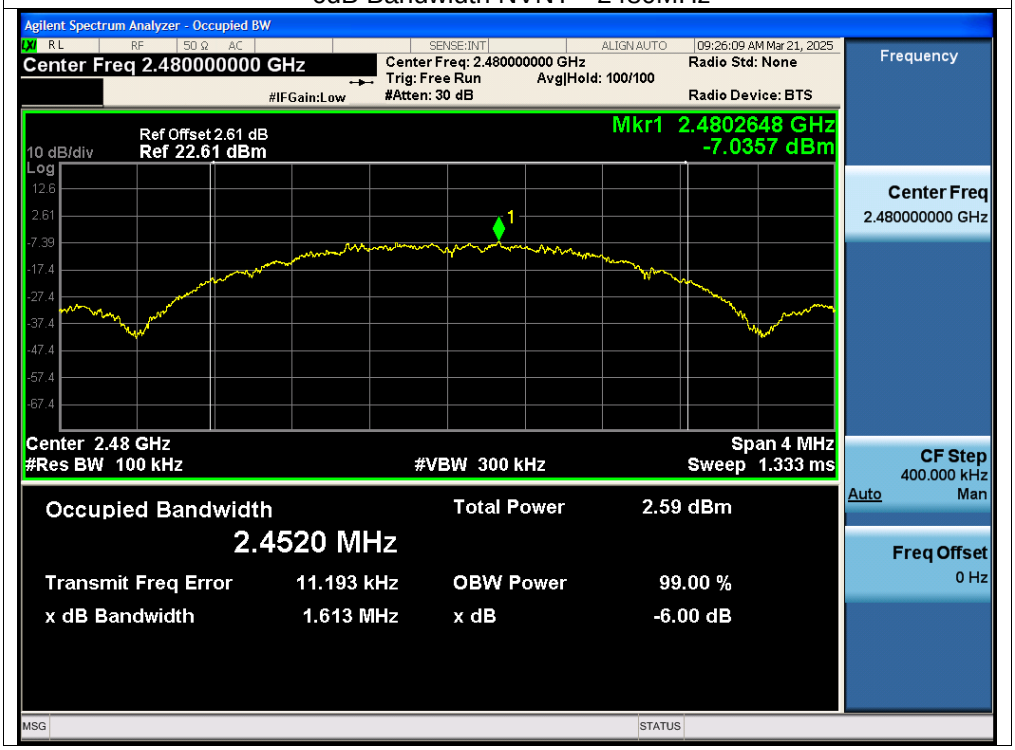

11. Peak Output Power Test

11.1 Block Diagram Of Test Setup

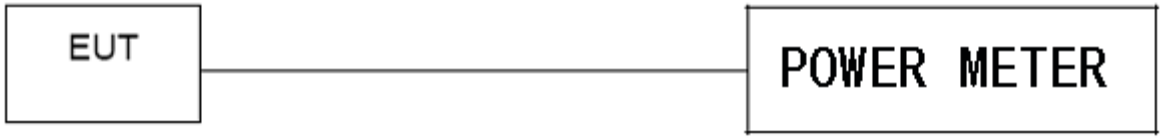

11.2 Limit

FCC Part15 (15.247) , Subpart C				
Section	**Test Item**	**Limit**	**Frequency Range (MHz)**	**Result**
15.247(b)(3)	Peak Output Power	1 watt or 30dBm	2400-2483.5	PASS

11.3 Test Procedure

a. The EUT was directly connected to the Power meter

11.4 EUT Operating Conditions

The EUT tested system was configured as the statements of 4.6 Unless otherwise a special operating condition is specified in the follows during the testing.
Note: Power Spectral Density(dBm)=Reading+Cable Loss

11.5 Test Result

Temperature;	26℃	Relative Humidity:	54%
Test Mode:	O-QPSK	Test Voltage:	DC 5V

Condition	Mode	Frequency (MHz)	Conducted Power (dBm)	Limit (dBm)	Verdict
NVNT	O-QPSK	2405	-1.56	30	Pass
NVNT	O-QPSK	2440	-2.12	30	Pass
NVNT	O-QPSK	2480	-3.02	30	Pass

12. 100 KHz Bandwidth Of Frequency Band Edge

12.1 Block Diagram Of Test Setup

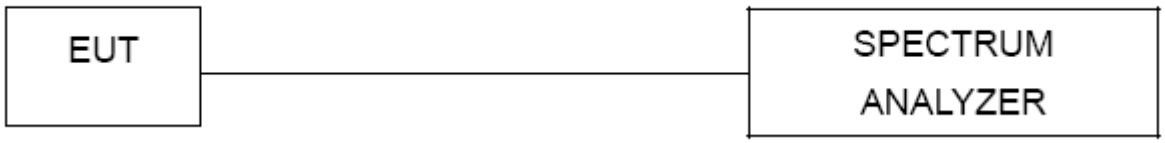

12.2 Limit

In any 100 kHz bandwidth outside the frequency band in which the spread spectrum intentional radiator is operating, the radio frequency power that is produced by the intentional radiator shall be at least 20 dB below that in the 100 kHz bandwidth within the band that contains the highest level of the desired power, based on either an RF conducted or a radiated measurement.

12.3 Test Procedure

Using the following spectrum analyzer setting:
a) Set the RBW = 100KHz.
b) Set the VBW = 300KHz.
c) Sweep time = auto couple.
d) Detector function = peak.
e) Trace mode = max hold.
f) Allow trace to fully stabilize.

12.4 EUT Operating Conditions

The EUT tested system was configured as the statements of 4.6 Unless otherwise a special operating condition is specified in the follows during the testing.
Note: Power Spectral Density(dBm)=Reading+Cable Loss

12.5 Test Result

Temperature;	26℃	Relative Humidity:	54%
Test Mode:	O-QPSK	Test Voltage:	DC 5V

Test Graphs

Band Edge NVNT 2405MHz Ref

Band Edge NVNT 2405MHz Emission

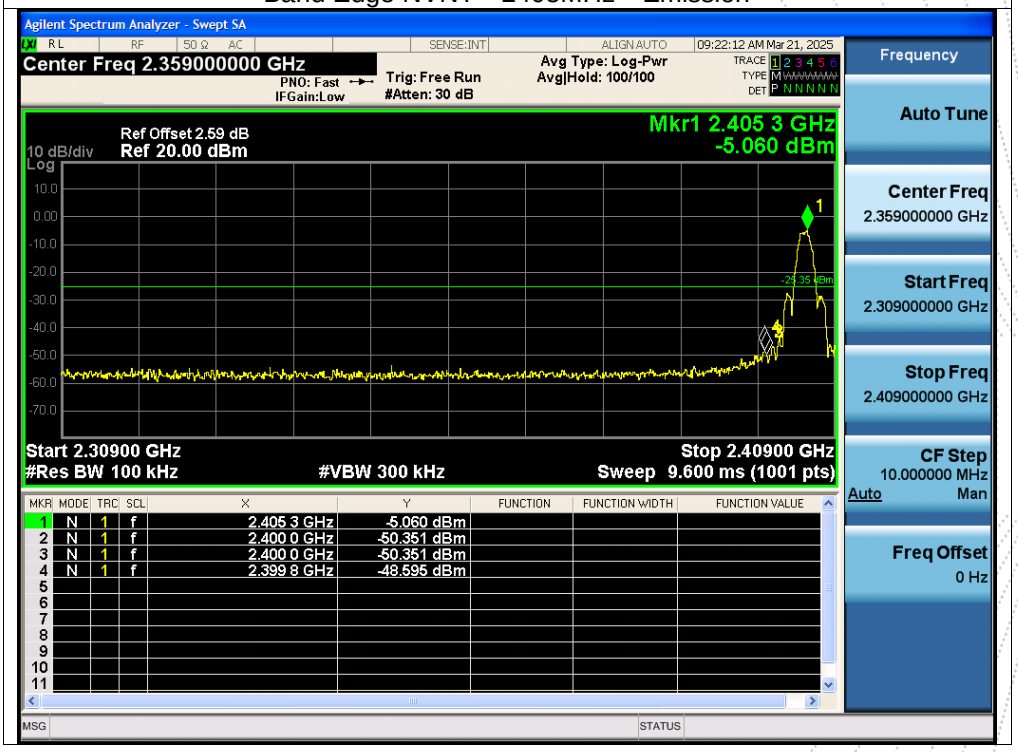

Band Edge NVNT 2480MHz Ref

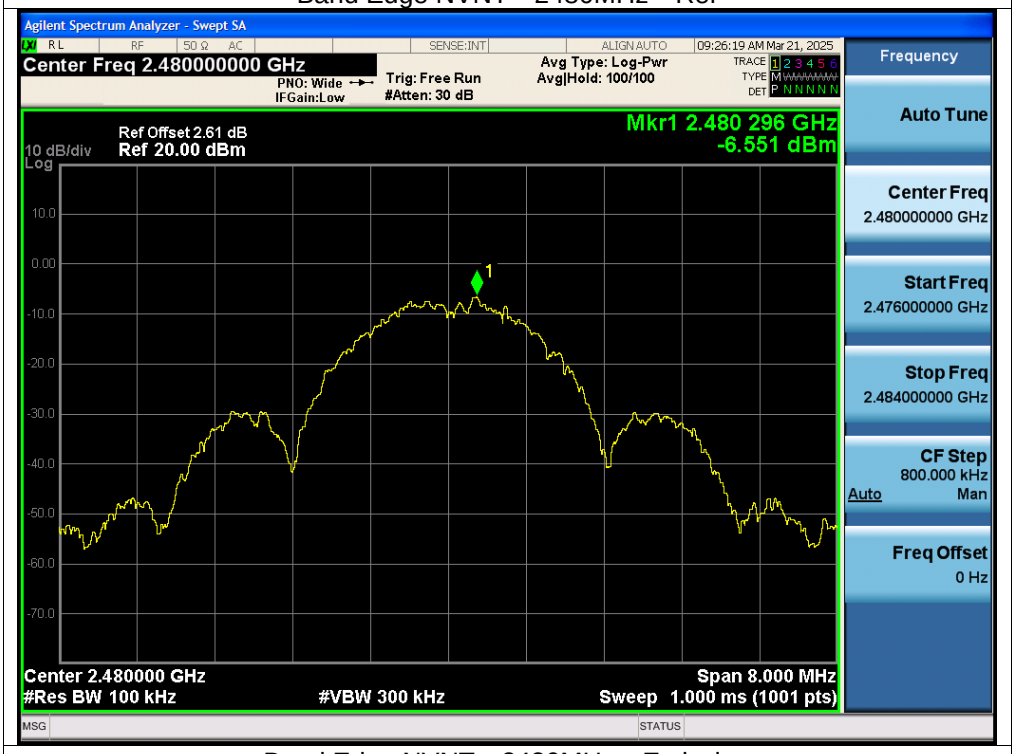

Band Edge NVNT 2480MHz Emission

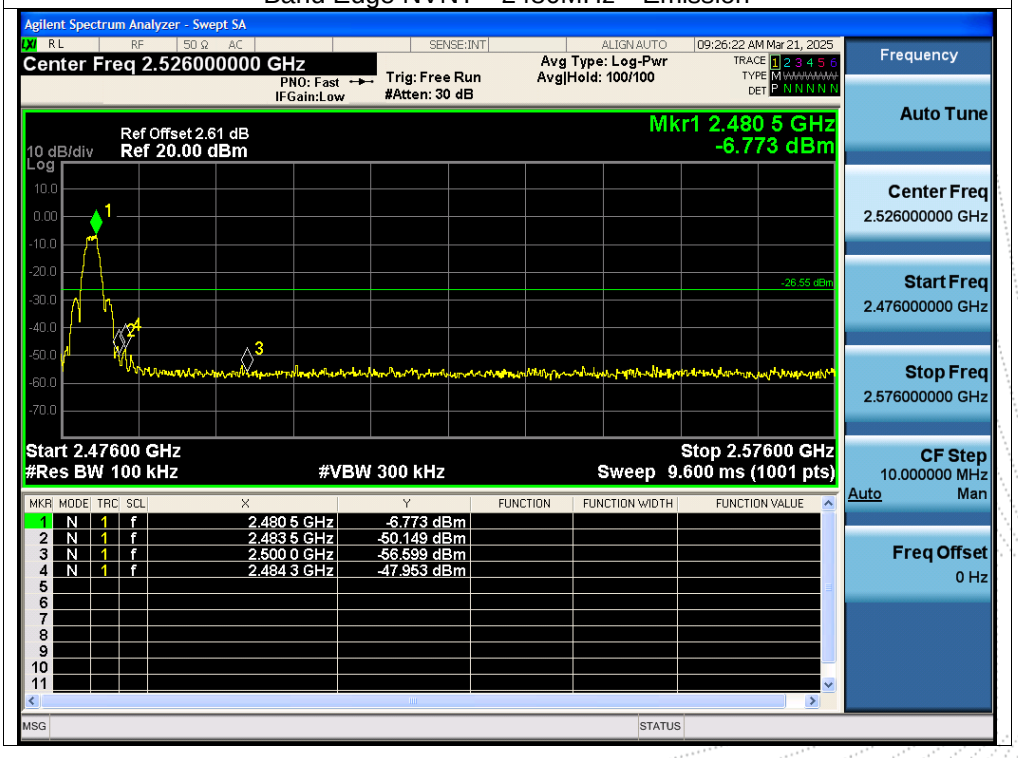

Test Graphs

Tx. Spurious NVNT 2405MHz Ref

Tx. Spurious NVNT 2405MHz Emission

Tx. Spurious NVNT 2440MHz Ref

Tx. Spurious NVNT 2440MHz Emission

Tx. Spurious NVNT 2480MHz Ref

Tx. Spurious NVNT 2480MHz Emission

13. Duty Cycle Of Test Signal

13.1 Standard Requirement

Pre-analysis Check: While conducting average power measurement, duty cycle of each mode shall be checked to ensure its duty cycle in order to compensate for the loss due to insufficient ratio of duty cycle. All duty cycle is pre-scanned, and result as obtained below shows only the most representative ones where duty cycle is conducted as the given transmission with given virtual operation that expresses the percentage.

13.2 Formula

Duty Cycle = Ton / (Ton+Toff)

13.3 Measurement Procedure

1. Set span = Zero
2. RBW = 8MHz
3. VBW = 8MHz,
4. Detector = Peak

13.4 Test Result

Condition	Mode	Frequency (MHz)	Duty Cycle (%)	Correction Factor (dB)	1/T (kHz)
NVNT	O-QPSK	2405	100	0	0
NVNT	O-QPSK	2440	100	0	0
NVNT	O-QPSK	2480	100	0	0

Test Graphs

Duty Cycle NVNT 2405MHz

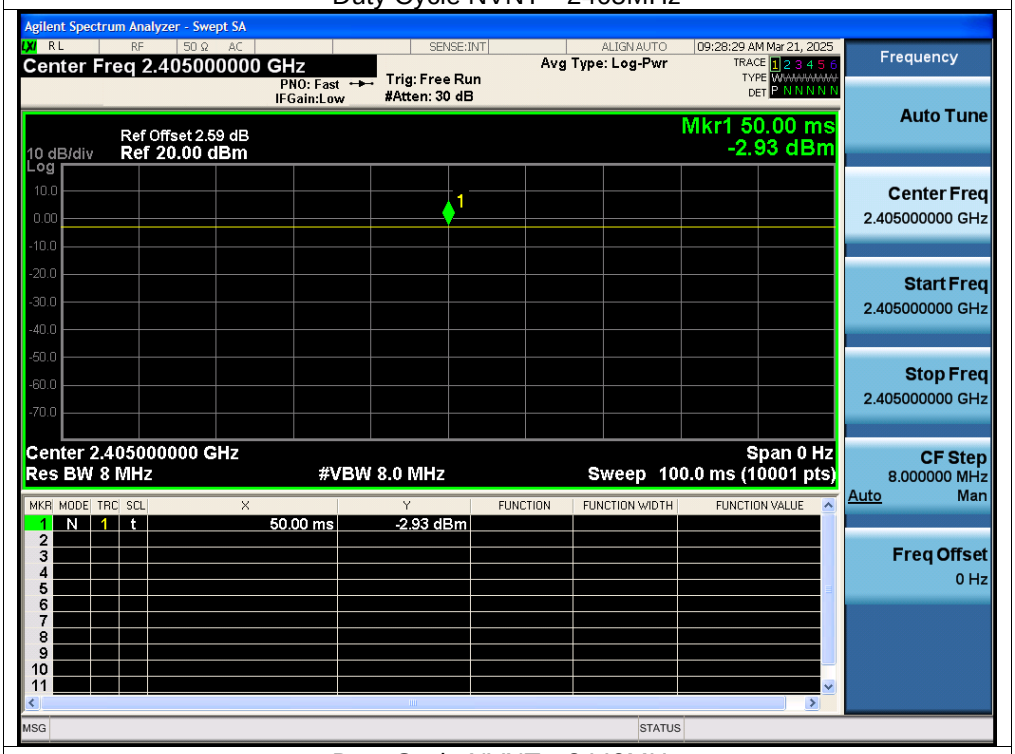

Duty Cycle NVNT 2440MHz

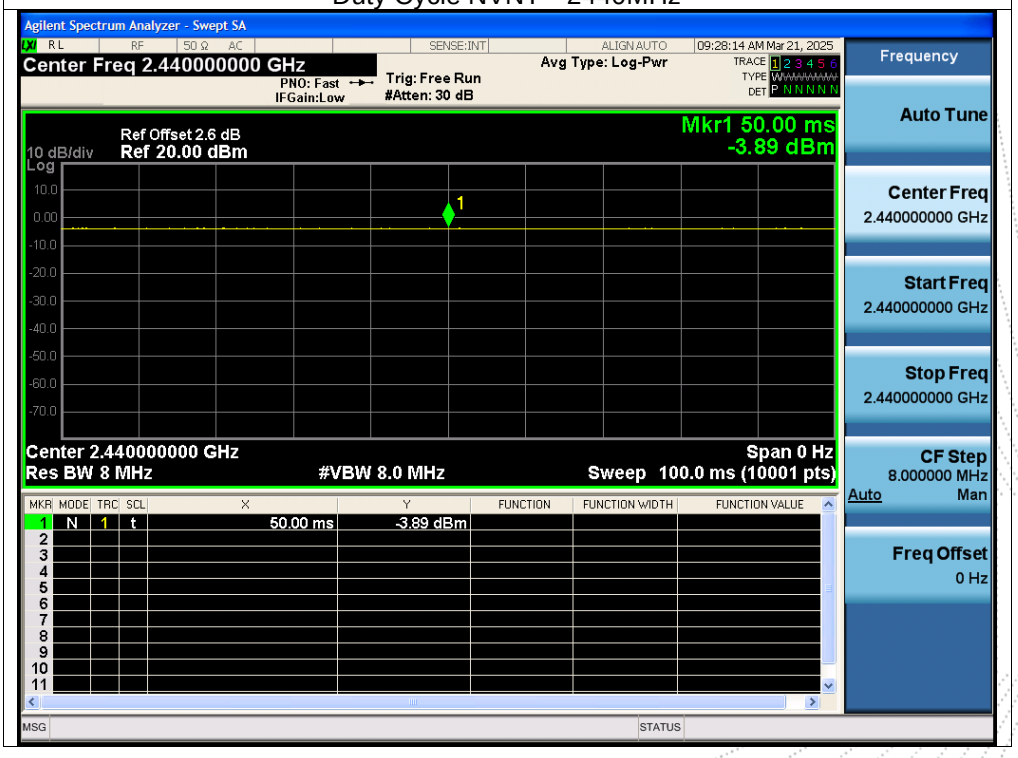

Duty Cycle NVNT 2480MHz

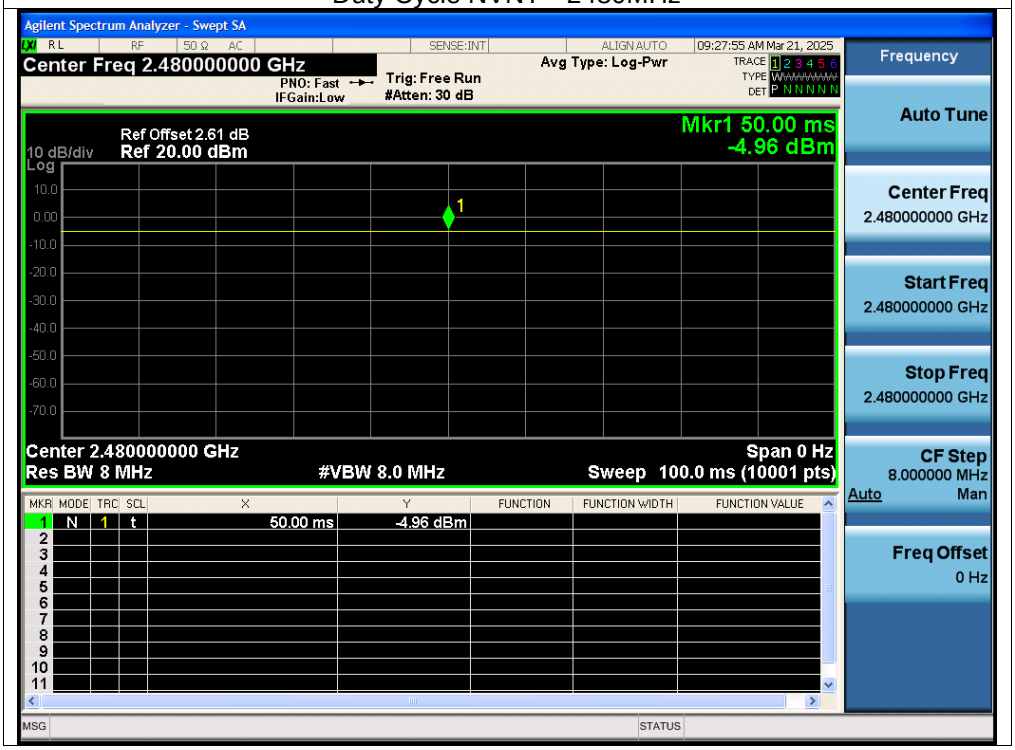

14. Antenna Requirement

14.1 Limit

15.203 requirement: For intentional device, according to 15.203: an intentional radiator shall be designed to ensure that no antenna other than that furnished by the responsible party shall be used with the device.

14.2 Test Result

The EUT antenna is External antenna, Antenna Gain is 5.0dBi, fulfill the requirement of this section.

STATEMENT

1. The equipment lists are traceable to the national reference standards.

2. The test report can not be partially copied unless prior written approval is issued from our lab.

3. The test report is invalid without the "special seal for inspection and testing".

4. The test report is invalid without the signature of the approver.

5. The test process and test result is only related to the Unit Under Test.

6. Sample information is provided by the client and the laboratory is not responsible for its authenticity.

7. The quality system of our laboratory is in accordance with ISO/IEC17025.

8. If there is any objection to this test report, the client should inform issuing laboratory within 15 days from the date of receiving test report.

Address:
1-2/F., Building B, Pengzhou Industrial Park, No.158, Fuyuan 1st Road, Zhancheng, Fuhai Subdistrict, Bao'an District, Shenzhen, Guangdong, China

TEL: 400-788-9558

P.C.: 518103

FAX: 0755-33229357

Website: http://www.chnbctc.com

Consultation E-mail: bctc@bctc-lab.com.cn

Complaint/Advice E-mail: advice@bctc-lab.com.cn

※※※※※ END ※※※※※