VEVOR®

TOUGH TOOLS, HALF PRICE

Technical Support and E-Warranty Certificate

www.vevor.com/support

PELLET GRILL SMOKER

MODEL: VA-575W

We continue to be committed to provide you tools with competitive price.
"Save Half", "Half Price" or any other similar expressions used by us only represents an estimate of savings you might benefit from buying certain tools with us compared to the major top brands and doses not necessarily mean to cover all categories of tools offered by us. You are kindly reminded to verify carefully when you are placing an order with us if you are actually saving half in comparison with the top major brands.

VEVOR®

TOUGH TOOLS, HALF PRICE

PELLET GRILL SMOKER

MODEL:VA-575W

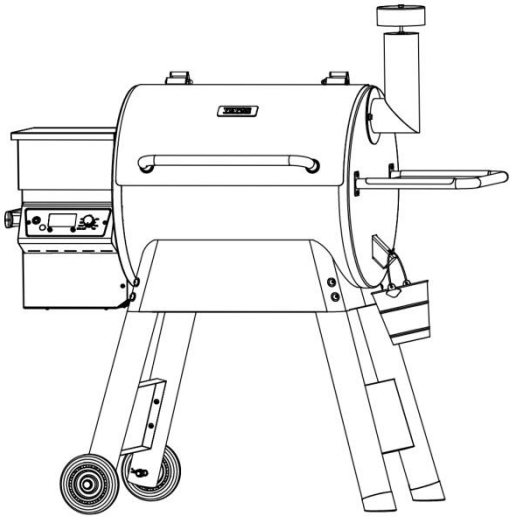

Note:The quantity of parts shown in the manual is the actual usage and the unused parts are spare parts.

NEED HELP? CONTACT US!

Have product questions? Need technical support? Please feel free to contact us:

Technical Support and E-Warranty Certificate
www.vevor.com/support

This is the original instruction, please read all manual instructions carefully before operating. VEVOR reserves a clear interpretation of our user manual. The appearance of the product shall be subject to the product you received. Please forgive us that we won't inform you again if there are any technology or software updates on our product.

	Warning-To reduce the risk of injury, user must read instructions manual carefully.
	This device complies with Part 15 of the FCC Rules. Operation is subject to the following two conditions:(1)This device may not cause harmful interference, and (2)this device must accept any interference received, including interference that may cause undesired operation.
	This product is subject to the provision of European Directive 2012/19/EC. The symbol showing a wheelie bin crossed through indicates that the product requires separate refuse collection in the European Union. This applies to the product and all accessories marked with this symbol. Products marked as such may not be discarded with normal domestic waste, but must be taken to a collection point for recycling electrical and electronic devices

Carbon Monoxide Poisoning Hazard	Do not use in Motor Homes	Do Not Use Indoors	Do Not Use in Tents	Use in open Spaces

FCC INFORMATION

CAUTION: Changes or modifications not expressly approved by the party responsible for compliance could void the user's authority to operate the equipment!

This device complies with Part 15 of the FCC Rules. Operation is subject to the following two conditions:

1) This product may cause harmful interference.

2)This product must accept any interference received, including interference that may cause undesired operation.

WARNING: Changes or modifications to this product not expressly approved by the party.responsible for compliance could void the user's authority to operate the product.

Note: This product has been tested and found to comply with the limits for a Class B digital device pursuant to Part 15 of the FCC Rules, These limits are designed to provide reasonable protection against harmful interference in a residential installation.

This product generates, uses and can radiate radio frequency energy, and if not installed and used in accordance with the instructions, may cause harmful interference to radio communications. However, there is no guarantee that interference will not occur in a particular installation. If this product does cause harmful interference to radio or television reception,which can be determined by turning the product off and on, the user is encouraged to try to correct the interference by one or more of the following measures.

· Reorient or relocate the receiving antenna.

· Increase the distance between the product and receiver.

· Connect the product to an outlet on a circuit different from that to which the receiver is connected.

· Consult the dealer or an experienced radio/TV technician for assistance.

IMPORTANT SAFEGUARDS

Thank you for using this product. In order to make sure that you can operate the machine correctly, read this instruction carefully before operation and keep it properly for future reference. Please be sure to read the precautions and safety rules in this page to ensure your safe use.
This manual will outline safety warnings and precautions, operating, maintenance and cleaning. The warnings and instructions reviewed in this manual cannot cover all possible conditions and situations that may occur. Caution and common sense are not built into this product, since we believe that the uses will comply with these codes.

Please read ALL the instructions before using your machine.

1. Make sure the voltage in your outlet is the same as the voltage indicated on the appliance's rating label.

2. Do not let children and minors get close to or touch the machine.

3. Do not touch the hot surface directly with your hands. Always operate with handle or knob.

4. To prevent electrical shock, do not immerse the cord or plug into water or other liquids.

5. Do not immerse the appliance in water or any other liquid.

6. Unplug the machine from the outlet when not in use and before cleaning. Cool the appliance before installing or removing parts and before cleaning.

7. Cool down the HOT parts before operation.

8. Do not operate the device with damaged cord or plug, malfunction or with any mechanical damage. Send it to your nearest authorized service centre for examination and repair (ONLY technicians should open up the unit).

9. Using any accessories or attachments that are not provided or recommended by the manufacturer may cause injury.

10. If the machine is not to be used for a long period of time, unplug it, clean and cover it and store it in a dry and safe place.

11. Do not leave the power cord hanging over the edge of table or counter or let it come into contact with any hot surfaces.

12. Do not place the unit on or near hot air, electric burners or heaters.

13. Always switch off the power before plugging in or unplugging. Hold the plug instead of pulling on the cord.

14. Do not apply this unit to any other purposes than the indicated usage.

15. Do not use it indoor or for commercial purposes.

16. KEEP IT OUT OF CHILDREN'S REACH.

17. DO NOT CLEAN IT WITH ANY ABRASIVE MATERIAL.

18. Never leave it unattended while in use.

19. Always check that this machine is plugged into a grounded outlet with the appropriate electrical supply. Ensure that the wall outlet being used is properly grounded. If not, you must install a grounded outlet. Have the work performed only by a certified electrician who is properly qualified to meet local safety and electrical codes.

20. Ensure that the power outlet, plug and cord being used are in good working condition. Damaged components should be repaired by a certified electrician who is qualified to meet local safety and electrical codes. Even if your power cord is functioning properly, keep it away from water and avoid letting it run over carpets or heating devices.

21. Avoid using it in the presence of flammable liquids, gases, dust or other explosive situations.

22. Extreme caution must be taken when moving an appliance containing hot oil or other hot liquids.

23. Do not operate the machine in an appliance garage or under a wall cabinet. Always unplug the unit from the electrical outlet when storing in an appliance garage. Otherwise, it would cause a risk of fire, especially if the machine touches the garage wall or the door touches it as it closes.

24. Type Y attachment: If the supply cord is damaged, it must be replaced by a special cord or assembly available from the manufacturer or its service agent.

25. This appliance can be used by children aged from 8 years and above and persons with reduced physical, sensory or mental capabilities or lack of experience and knowledge if they have been given supervision or instruction concerning use of the appliance in a safe way and understand the hazards involved. Children shall not play with the machine alone. Cleaning and user maintenance shall not be made by children without supervision.

ATTENTION!

This article is intended for outdoor use. Do not use indoors!

PRODUCT PARAMETERS

Model No.	Region	Voltage Power	Auger motorp ower	Ignitor power	Fan motor power	Plug Type
VA-575W	North America	AC110-120V 60Hz 250W	25W	200W	25W	American PLUG

ATTENTION!

1. The voltage used for this device must be the same as the power supply voltage.

PRODUCT COMPONENTS

ATTENTION!

1. Check all parts for completeness before beginning assembly.

2. To avoid accidents or sharp edges injuries please assemble and use carefully. For assembly you need a Phillips screwdriver and different screw wrenches. 2 persons are needed to assemble the product.

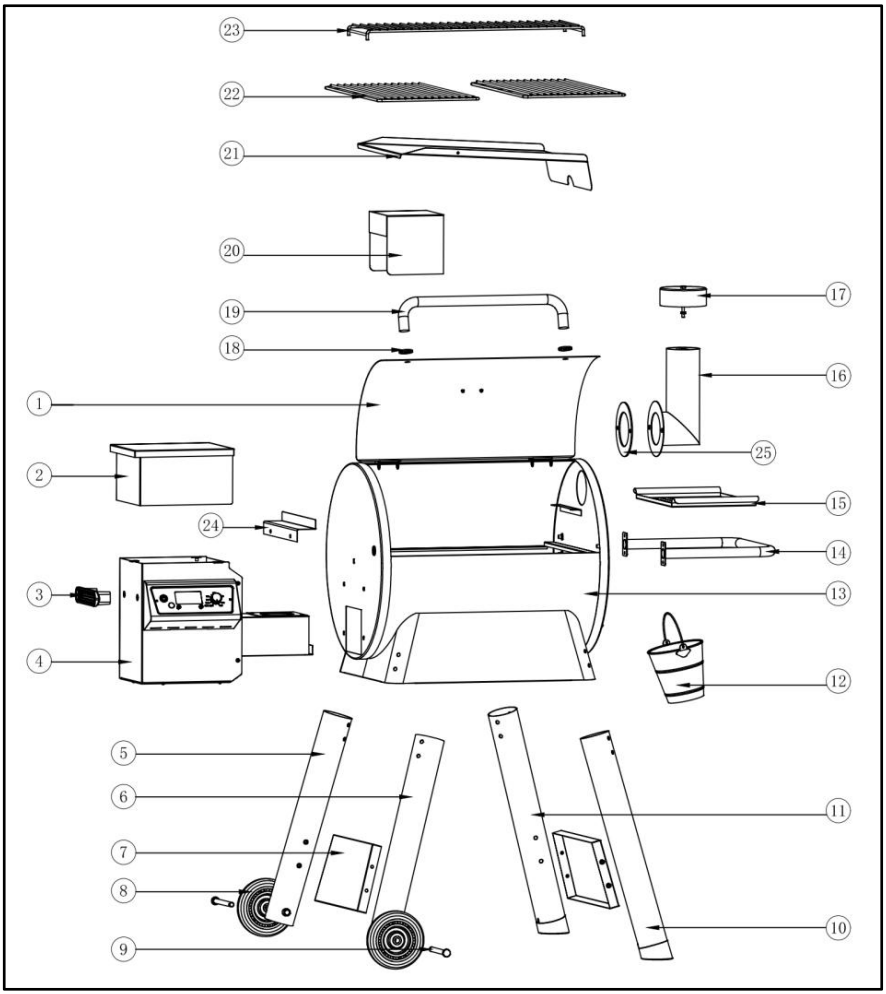

NO.	Part name	Qty	NO.	Part name	Qty
1	Lid	1	13	Grill Chamber	1
2	Hopper Top Assembly	1	14	Side Shelf Handle	1
3	Hopper Handle	1	15	Side Shelf	1
4	Hopper Burner Assembly	1	16	Smoke Stack Assembly	1
5	Left Rear Leg	1	17	Chimney Cap	1
6	Left Front Leg	1	18	Lid Handle Base	2
7	Leg Beams	2	19	Lid Handle	1
8	Wheels	2	20	Heat Baffle	1
9	Axle	2	21	Grease Drain Pan	1
10	Right Front Leg	1	22	Porcelain Grills	2
11	Right Rear Leg	1	23	Warming Rack	1
12	Grease Bucket	1	24	Grease drain pan support	1
25	Smoke Stack Gasket	1			

NO.	Part name	Qty	NO.	Part name	Qty
A	1/4-20x1/2	12	H	R PIN	2
B	1/4-20x3/4	6	I	5/16-18x3.62	8
C	OD1xID0.5	4	J	5/16-18	8
D	1/4-20x12.7	2	K	1/4-20	2
E	OD0.75xID0.25	8	L	OD0.65xID0.35	16
F	8#-32x3/8	3	M	Spring Washer	8
G	1/4-20x2-3/8	2	N	Hex Wrench	1
O	Open End Wrench	1	P	Screwdriver	1

STEP1 C:OD1xID0.5-4PCS H:R PIN-2PCS

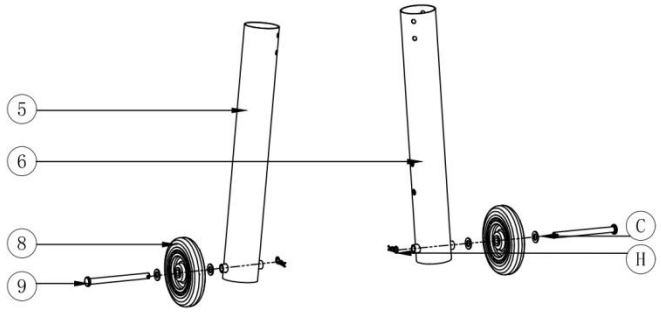

1. Puse the Axle(9) through the Gasket(C),wheel(8),Gasket(C) ,R Pin(H)and then through the hole in the leg(5) as shown.Repeat for the other wheel and leg(6).

STEP2 A: 1/4-20x1/2-8PCS

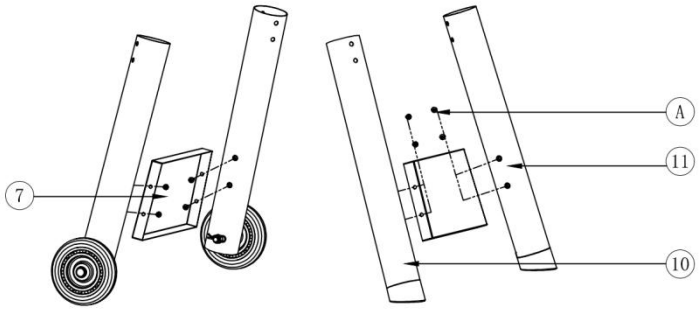

2. Take Left Front & Rear Legs (6)(5) and use the Bolt (A) to assemble the Footer Beam (7) through the holes, as shown.Repeat for the Right Front & Rear Legs (10)(11) .

STEP3 I: 5/16-18x3.62-8PCS L:OD0.65xID0.35-16PCS

M:Spring Washer-8PCS J:5/16-18-8PCS

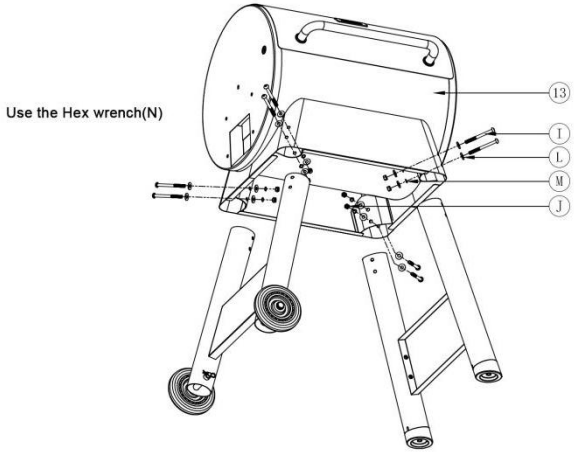

3.Lift up the Chamber (13) on the Body Frame. Align the Chamber holes with the Frame holes and secure with Bolt (I), Gasket (L) , Gasket(M) and Nut (J) in order, as shown.

STEP4 B:1/4-20x3/4-2PCS E:OD0.75xID0.25-2PCS

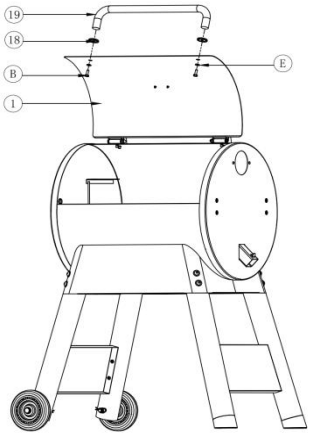

4.Use bolts (B) Insert through Gasket (E) and Lid (1) directly to the Lid handle base (18) and Lid Handle (29), then tighten up. Do not over-tight.

STEP5 F:8#-32x3/8-3PCS G:1/4-20x2-3/8-2PCS

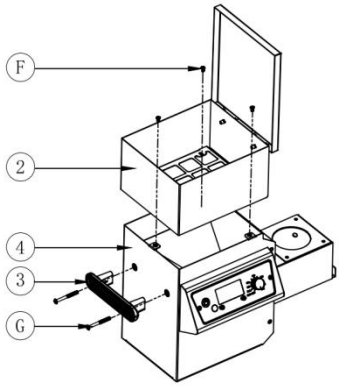

5. Insert Hopper top case (2) into Hopper burner Assembly (3), align the holes.Then use bolts (F) to tighten up.Insert Bolt (G) through the Hopper Handle (4) and into the Hopper.

STEP6 B:1/4-20x3/4-4PCS E:OD0.75xID0.25-4PCS

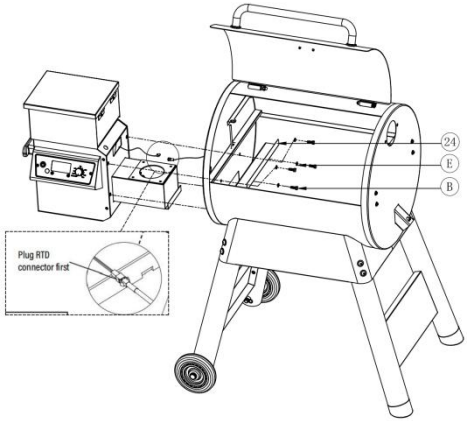

6. (1) Open the Lid, insert the Hopper into the Chamber, then using Bolts(B) and Gaskets(E) install it in sequence from inside, as shown. (2) Locate the RTD plug-in connector coming from the mounted RTD inside the grill frame. Connect this with the mating connector located on the outside of the hopper burner assembly. **NOTE: excess wire on the RTD plug should remain outside the Chamber.**

STEP7 A:1/4-20x1/2-4PCS

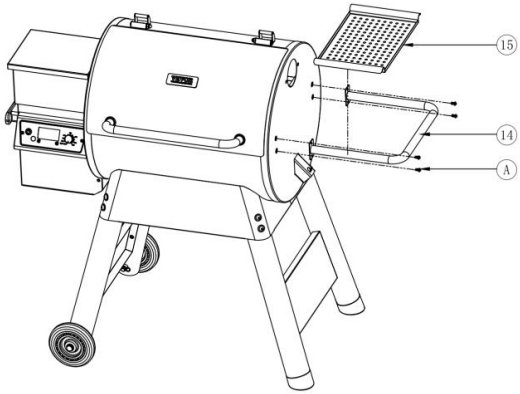

7.Use Bolts (A) to install the Side Shelf Handle (14) from the outside of the Grill Chamber.Put the Side Shelf (15) on the Side Handle .

STEP8 D:1/4-20x12.7-2PCS E:OD0.75xID0.25-2PCS K:1/4-20-2PCS

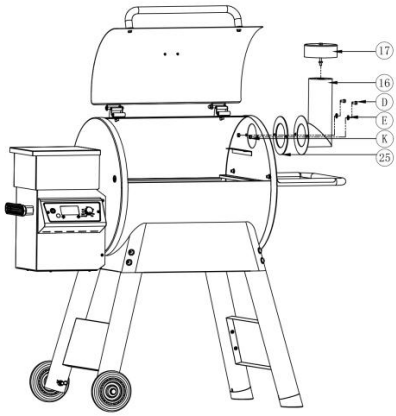

8. Tighten the Chimney Cap (17) on the Smoke Stack Assembly (16).Align the holes in the Smoke Stack (16) with holes in the Smoke Stack Gasket (25), which fits between right end of the Grill and the Smoke Stack (2). Insert the Hexagon Bolts (D) through the holes in the Smoke Stack (16) and the Smoke Stack Gasket (25). Place Gasket (E) on each Bolt and secure with Hexagon Nut (K).

STEP9

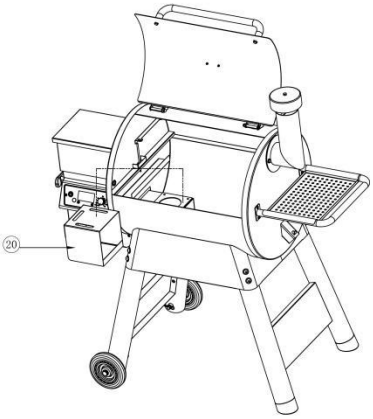

9.Position The Heat Baffle (20) on the locating brackets which is on the inside walls of the Grill. Slide Heat Baffle (20) to the right to lock in place.

STEP10

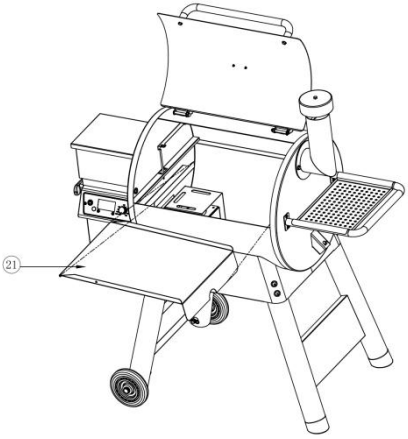

10.Position The Grease Drain Pan (21) over the Firepot. The notched legs of the Grease Drain Pan should be facing downward to fit onto the locating brackets so that the grease can flow into the Grease Drain Tube.

STEP11

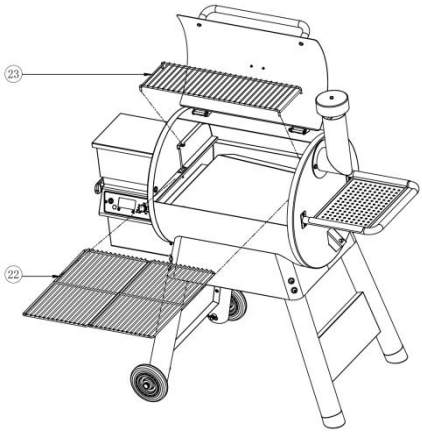

11.Position the Porcelain Grills (22) inside the chamber. Install the Warming Rack (23) on the rack supports inside the chamber.

STEP12

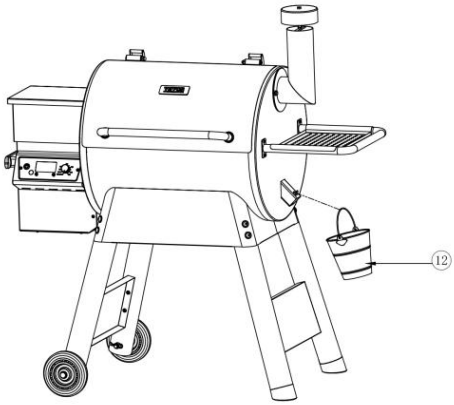

12. Hang the Grease Bucket (12) on the Grease Drain Tube.

Operational Instructions for the Wi-Fi Controller

Power On

Briefly press the power button once to turn on the grill. Upon starting, the display will first show Program codes, and finally display the all the default display settings.

Adjusting Grill Temperature

Starting from the default grill temperature of 275 degrees, you can adjust the temperature by pressing the knob once. This will cause the current temperature reading to blink. To change the temperature, rotate the knob clockwise to increase or counterclockwise to decrease to your desired setting.

The increments for adjustment are in 5° F steps. Once you've selected the temperature, it will continue to blink for 5 seconds before the new setting is confirmed automatically. Temperature range is from 160° F (Smoke setting, denoted as 'S') to 500° F (High setting, denoted as 'H').

Adjusting Meat Probe Temperature

Press the knob quickly twice. Then turn the knob either clockwise or counterclockwise to set your desired probe temperature. Wait for the display to blink for 5 seconds, after which the temperature will be set automatically.

Feed Button

Press and hold this button to activate an extra feed of pellets to the firepot. Release the button to stop feeding pellets.

Turning Off the Grill

To turn off the grill, press and hold the power button for 1 second. You will see 'OFF' on the display, which means the grill is shutting down.

Please note that the fan will continue to run for about 10 minutes to cool down the system completely. Do not unplug or move the grill until the fan has stopped to ensure the shutdown process completes safely.

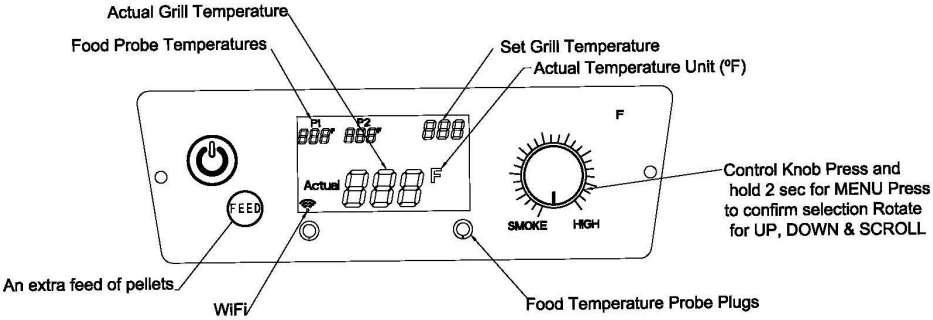
Actual Grill Temperature
Food Probe Temperatures
Set Grill Temperature
Actual Temperature Unit (ºF)
P1
P2
Actual
F
FEED
SMOKE
HIGH
Control Knob Press and hold 2 sec for MENU Press to confirm selection Rotate for UP, DOWN & SCROLL
An extra feed of pellets
WIFi
Food Temperature Probe Plugs

INITIAL FIRING INSTRUCTIONS

Please read this manual carefully and follow it step by step before starting your SMOKER Grill for the first time and each time the grill runs out of pellets.

1.Remove the grates, grease pan, and heat baffle from the grill.

2.Open the hopper lid and check for any foreign objects inside the auger and hopper.

3.Connect the power cord to a grounded 110V AC outlet.

4.Initiate startup by pressing the power button and the default grill temperature is 275 °F degrees. Check the following:

✔The display should show actual and preset temperatures. If a code appears, refer to the troubleshooting guide.

✔Verify the auger is turning after 2-3 minutes, as it moves slowly on low settings.

✔ Feel for air blowing from the blower fan above the firepot.The hot rod should start to heat up within 3 minutes.

5.Post-inspection, fill the hopper with pellets and close the hopper lid. Switch the temperature to ' High' and watch the firepot for a few minutes until pellets fall in. Wait for the pellets to ignite and produce white smoke and flames. Then, turn the grill off and let it cool.

6.Put back the grates, grease pan, and heat baffle. Power on, and the default grill temperature is 275°F degrees. Close the lid when smoke appears， then turn to ' High' for 45 minutes to clear any residue.

You have completed all the initial checks and burn-in. Great job!

Notes:

Preheat the grill for 10 minutes before adding food to ensure it reaches the desired temperature efficiently.

Always start with the grill on ' Smoke' setting and lid open to release white smoke, then close the lid to begin cooking.

ALWAYS START THE GRILL ON SMOKE SETTING WITH THE LID OPEN !

After the Pellets are ignited, you can turn the Temperature Dial to any cooking temperature desired. Please don’t turn the Temperature Dial to SHUT DOWN CYCLE while in use.

★ (Feed button): Feed pellets into the fire pot. Pressing and holding the Feed button will activate.

ERROR CODES

●**LEr(Low Temperature Alarm):**Grill temperature was below 120℉ for more than 20 minutes.

Solution: Turn the Temperature dial to SHUT DOWN CYCLE，then you can turn the Temperature Dial to any cooking temperature desired.

●**HEr (High Temperature Alarm):**Grill temperature reached 580℉.

Solution: Turn the Temperature dial to SHUT DOWN CYCLE.Open the Lid and let the grill cool down for 5-10minutes.Then you can turn the Temperature Dial to any cooking temperature desired.

●**Er1:**Ensure temperature probe is properly connected to the controller board.

●**Er2:**Temperature dial security alarm.

Solution: Press and hold the power button for 1 second to turn off the grill, and then briefly press the power button once to turn on the grill.Then you can turn the Temperature Dial to any cooking temperature desired.

●**Er3:**Temperature dial security alarm.

Solution: The ignition was successful, and the temperature rose .When the temperature dropped below 120℉ for more than 6 minutes and out of pellets , then the alarm was called Er 3. The method is the same as Er2.

WARNING: DO NOT TURN OFF THE SWITCH WHILE THE FAN IS STILL WORKING ON THE OFF CYCLE, THE GRILL WILL AUTOMATICALLY SHUT OFF WHEN THE CYCLE IS DONE. INTERRUPTION OF THE OFF CYCLE COULD RESULT IN A FIRE IN THE HOPPER CHAMBER.

WARNING! This product smoker grill will become very hot, do not move it during operation.

WARNING! Keep children and pets away.

WARNING! In case of the danger of carbon monoxide poisoning, do not use the product rotisserie grill indoors.

WARNING! Do not use the barbecue in a confined and/or habitable space e.g. houses, tents, caravans, motor homes, boats.

WARNING! Remove all packaging materials and keep them for future use.Packaging materials are not a toy.

WARNING! Don't let children play with the packaging materials. If they swallow the packaging materials, they will suffocate!

ATTENTION! Always wear gloves when adjusting the grill, the handles of the grill can become very hot during the grilling process.

IMPORTANT! Do not pour water into the appliance while it is still hot.

IMPORTANT! Close the ventilation slider to extinguish the appliance. (Only applicable for appliance with ventilation slider)

COOKING TIPS & HINTS

1. Always wash your hands before and after handling uncooked meat and before eating.
2. Always keep raw meat away from cooked meat and other foods.
3. Before cooking, ensure grill surfaces and tools are clean and free of old food residues.
4. DO NOT use the same utensils to handle cooked and uncooked foods.
5. Ensure all meat is cooked thoroughly before eating.

CAUTION:

1. Eating raw or under cooked meat will cause food poisoning (e.g. bacteria strains such as Escherichia coli).
2. To reduce the risk of under cooked meat, cut the meat to ensure it is fully cooked.
3. If the meat is fully cooked, its juice should be clear and there should be no pink / red juice or traces of meat color.
4. Cooking larger pieces of meat and joints is recommended before finally cooking on the grill.
5. After cooking on your grill always clean the cooking surfaces and utensils.

CLEAING MAINTENANCE AND STORAGE

1. For cleaning, wipe the surface with a damp (not wet) cloth or wipe dry with a clean lint free cotton cloth.
2. Window cleaning liquid or a similar cleaning liquid can be used to clean the surface.
3. Always unplug the machine before storage.
4. Always make sure the machine is cool and dry before string.
5. Store the appliance in a dry and clean area.

VEVOR®

TOUGH TOOLS, HALF PRICE

Technical Support and E-Warranty Certificate

www.vevor.com/support

Log in

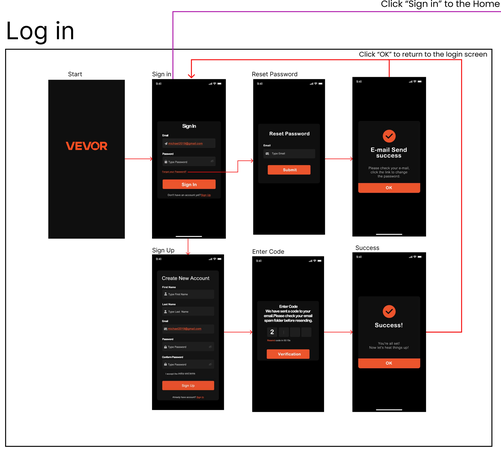

Connected Devices

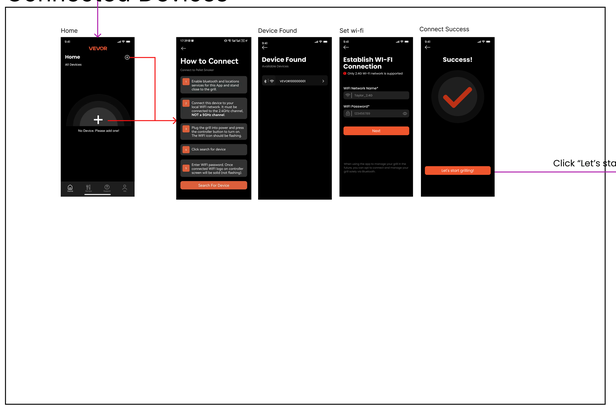

Control screens

Device Details

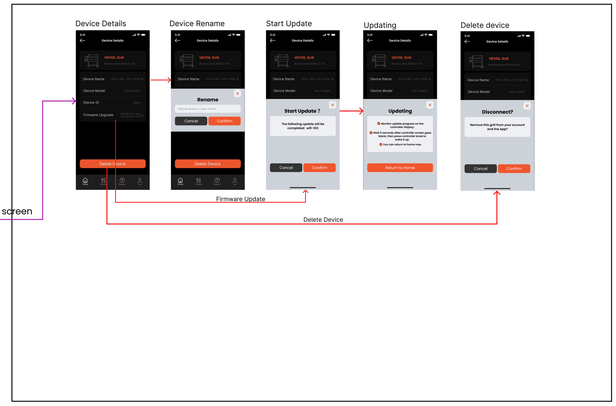

User information screens

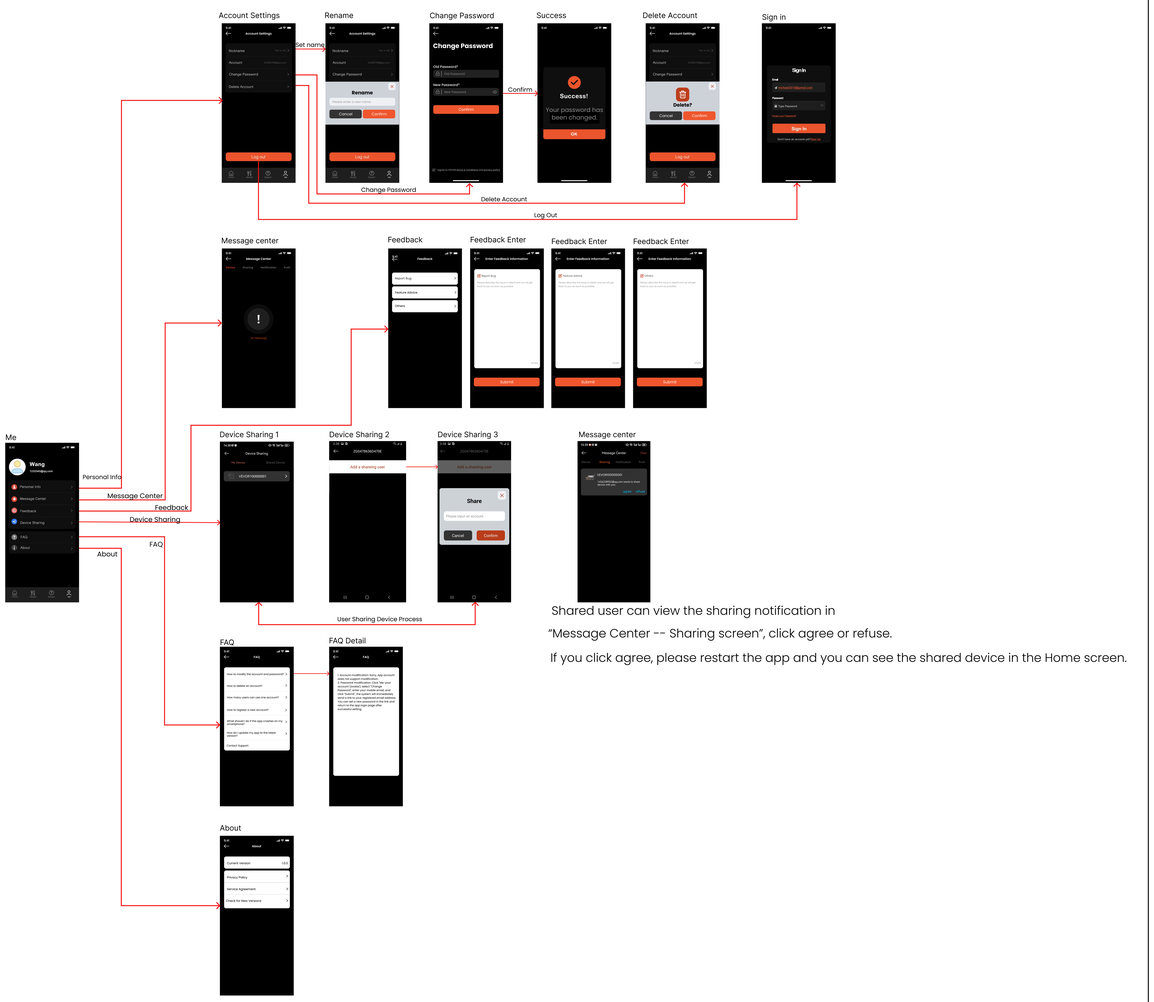

Shared user can view the sharing notification in

"Message Center -- Sharing screen", click agree or refuse.

If you click agree, please restart the app and you can see the shared device in the Home screen.

Error

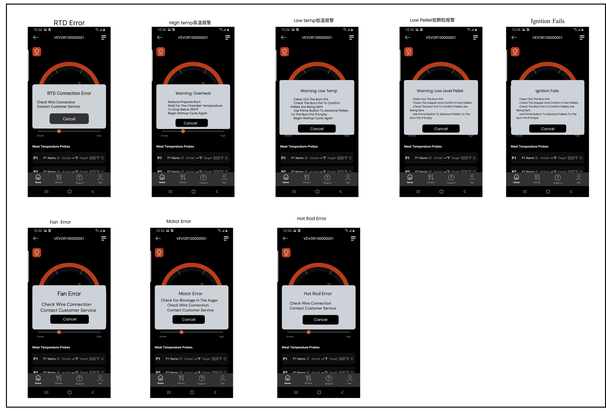

Recipe &Support

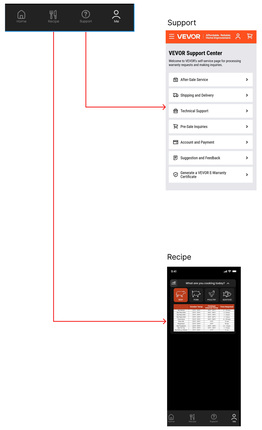

Contact Us – Official VEVOR Support

This device complies with Part 15 of the FCC Rules. Operation is subject to the following two conditions: (1) this device may not cause harmful interference, and (2) this device must accept any interference received, including interference that may cause undesired operation

NOTE: This equipment has been tested and found to comply with the limits for a Class B digital device, pursuant to Part 15 of the FCC Rules. These limits are designed to provide reasonable protection against harmful interference in a residential installation. This equipment generates, uses and can radiate radio frequency energy and, if not installed and used in accordance with the instructions, may cause harmful interference to radio communications. However, there is no guarantee that interference will not occur in a particular installation.
If this equipment does cause harmful interference to radio or television reception, which can be determined by turning the equipment off and on, the user is encouraged to try to correct the interference by one or more of the following measures:
-- Reorient or relocate the receiving antenna.
-- Increase the separation between the equipment and receiver.
-- Connect the equipment into an outlet on a circuit different from that to which the receiver is connected.
-- Consult the dealer or an experienced radio/TV technician for help.

Warning: changes or modifications not expressly approved by the party responsible for compliance could void the user's authority to operate the equipment

Radiation Exposure Statement
This equipment complies with FCC radiation exposure limits set forth for an uncontrolled environment.
This equipment should be installed and operated with minimum distance 20cm between the radiator and your body.