User’s Manual

# DA BT CP AA Wireless
# HDA301

**READ THIS MANUAL BEFORE USING HEAD UNIT.**

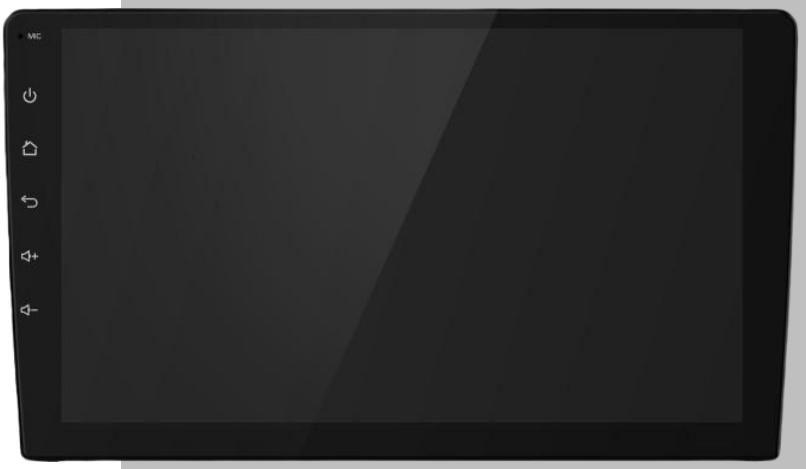

English

# CONTENTS


1. PRECAUTIONS..... 3
2. BUTTON DESCRIPTION.....4
3. FUNCTIONS.....4
4. AUDIO SETTINGS.....5
5. DISPLAY SETTINGS..... 6
6. SYSTEM SETTINGS..... 6
7. RADIO OPERATION..... 8
8. USB MUSIC FILE OPERATION.....8
9. USB PHOTO FILE OPERATION..... 9
10...USB MOVIE FILE OPERATION.....10
11...AV-IN OPERATION.....11
12...Auto Link (Mirroring).....12
13. iPod OPERATION..... 12
14. BLUETOOTH FUNCTION.....13
15. CAR PLAY..... 16
16. ANDROID AUTO..... 17
17. GENERAL PRECAUTIONS.....18
18. RECOMMENDATIONS FOR USE DEVICES..... 18
19. FORMAT AVAILABLES.....19
20. USB DEVICES AVAILABLES.....21
21. TROUBLESHOOTING.....21
22. FCC Warning Statements..... 23
23. SPECIFICATIONS..... 24
24. WIRE CONNECTION GUIDE..... 26

# 1. PRECAUTIONS

## ⚠ WARNING

- For your safety, the driver should not watch any video sources while driving. Please note that watching video sources while driving is prohibited by law in some countries. Also, while driving, keep the volume at a level at which external sounds can be heard.
- Do not disassemble or modify this unit. It may cause an accident, fire, or electric shock.
- Do not use this unit when trouble exists, such as no screen content is visible or no sound is audible. It may cause an accident, fire, or electric shock. In this case, please contact an authorized dealer or nearest service center of HJ Automotive Electronics(Herein after HJA).
- In case of a problem, such as any foreign material entering the unit, the unit getting wet, or smoke or strange smell coming out from the unit etc., stop using the unit immediately, and consult your HJA authorized dealer or nearest HJA service center. Continuing to use it in this condition may cause an accident, fire, or electric shock.
- When replacing the fuse only use a fuse with the same specification as the original. Using a fuse with a different specification may cause a fire.
- For the installation of this unit or a change in the installation, contact your local HJA authorized dealer to ensure a safe installation. Professional skills and experience are required to install these types of devices in most modern vehicles.
- As the driver, you alone are responsible for your driving safety.
- In order to avoid distraction and accidents, do not operate the system while driving. Operate the system only when the vehicle is stopped at a safe place and the parking brake is on.
- Changes or modifications not expressly approved by the party responsible for compliance will void HJA's liability in case of an accident.
- This equipment has been tested and found to comply with the limits for a Class B digital device, pursuant to Part 15 of the FCC Rules. These limits are designed to provide reasonable protection against harmful interference in a residential installation. This equipment generates, uses and can radiate radio frequency energy and, if not installed and used in accordance with the instructions, may cause harmful interference to radio communications. However, there is no guarantee that interference will not occur in a particular installation.

  If this equipment does cause harmful interference to radio or television reception, which can be determined by turning the equipment off and on, the user is encouraged to try to correct the interference by one or more of the following measures:

  - Reorient or relocate the receiving antenna.
  - Increase the separation between the equipment and receiver.
  - Connect the equipment into an outlet on a circuit different from that to which the receiver is connected.
  - Consult the dealer or an experienced radio/TV technician for help.
- Improper connection of speed pulse signal may result in serious damage or injury including electrical shock, and interference with the operation of the vehicle’s anti-lock braking system, automatic gearbox and speedometer indication.

This device complies with Industry Canada license-exempt RSS standard(s). Operation is subject to the following two conditions: (1)this device may not cause interference, and(2) this device must accept any interference, including interference that may cause undesired operation of the device.

- This product contains Metallic and Plastic recyclable materials that could be reused.

## ⚠ ABOUT THE REGISTERED MARKS, ETC

- "Made for iPod" and "Made for iPhone" mean that an electronic accessory has been designed to connect specifically to iPod or iPhone, respectively, and has been certified by the developer to meet Apple performance standards. Use of the Apple CarPlay logo means that a vehicle user interface meets Apple performance standards. Apple is not responsible for the operation of this device or its compliance with safety and regulatory standards. Please note that the use of this accessory with iPod or iPhone may affect wireless performance.
- iPhone, iPod and Siri are trademarks of Apple Inc., registered in the U.S. and other countries.
  Apple CarPlay is a trademark of Apple Inc., registered in the U.S. and other countries.
- Android Auto logo means that electronic accessory has been designed to connect specifically to Android phone 5.0(Lollipop) or higher versions, and has been certified by the developer to meet Google performance standards.
  Android and Android Auto are trademarks of Google Inc.
- The Bluetooth® word mark and logos are registered trademarks owned by Bluetooth SIG, Inc. and any use of such marks by HJ Automotive Electronics Co., Ltd. is under license. Other trademarks and trade names are those of their respective owners.

# 2. BUTTON DESCRIPTION

1. Power button
2. Home button
3. Return button
4. Volume up button
5. Volume down button
6. LCD Display: The display will show various widgets/options available depending on the mode you are in.
7. Widgets

# 3. FUNCTIONS

**LCD / WIDGETS**

# 3. FUNCTIONS (Cont.)

**TUNE**
**-Preset buttons 12 AM and 12 FM**
**-Search/Seek tuning, Manual tuning**

**AUDIO**
**-Electronic Audio controls**
**-Bass, Mid and Treble controls**
**-Balance control 4 way**
**-Loudness**
**-4 modes of pre-equalization (User, Pop, Rock, Classic, Jazz)**
**-Output power 45W x 4 Ch**

**USB PLAYER**
**-Repeat control**
**-MP3/WMA searching control**
**-Forward and Backward**
**-Random Control function**

**General**
**-Display Audio Information**
**-USB Charging**
**-Mode Selector Radio/AV-In/USB/iPod/BT/CP/AA/Wallpaper**
**-Voltage operation 13.2 +/- 5%**

# 4. AUDIO SETTING

**POWER ON/OFF/MUTE, VOLUME UP, VOLUME DOWN**
Push the power button to turn the unit ON, push the power button when the unit is on to mute the audio and push and hold the power button for 2 seconds to turn the unit OFF. Push the volume up or down button to adjust the volume level: minimum of 0 and maximum of 40, after 5 seconds of the last adjustment the units display will return to the previous mode.
Please note – in order to protect the driver and the vehicles speakers, the unit is designed to always start at an initial volume level (set in the system settings) when powered on.
Push the Tone icon in the bottom right of the main screen to access the tone setting menu where you can adjust EQ MODE, BASS, MID, TREBLE, LOUD and RESET.
**Balance Adjustment**
To adjust the balance level, press and slide the white dot in the center of Balance adjustable setting area positioned on the left side of 'Tone Adjust Menu'. The white dot can be moved Front(F1~F5)/Rear(R1~R5) and Right(R1~R5)/Left(L1~L5).
**Equalizer Mode Adjust**
To adjust the preset equalizer profiles press the up and down arrows to change between the various options. Options available are USER, POP, ROCK, CLASSIC, JAZZ.
**Bass Adjustment (available only when Equalizer mode is set to USER)**
To adjust the level of bass, press the up arrow to increase the Bass level and the down arrow to decrease the Bass level. The value displayed will range from -5 to +5.

# 4. AUDIO SETTING (Cont.)

**Mid Adjustment (available only when Equalizer mode is set to USER)**

To adjust the level of Mid, press the up arrow to increase the Mid level and the down arrow to decrease the Mid level. The value displayed will range from -5 to +5.

**Treble Adjustment (available only when Equalizer mode is set to USER)**

To adjust the level of Treble, press the up arrow to increase the Treble level and the down arrow to decrease the Treble level. The value displayed will range from -5 to +5.

**Loudness**

To toggle, whether loudness is on or off, simply press 'LOUD' on the screen. Loudness enhances the unit's Bass and Treble response.

**Reset**

Pressing 'Reset' on the screen will return all tone settings to factory default.

# 5. DISPLAY SETTING

Push the Display icon in the bottom right of the main screen to access the display setting menu where you can adjust BRIGHTNESS, CONTRAST, DAY/NIGHT DIMMER, **LCD OFF** and RESET.

**Brightness Adjustment**

To adjust brightness level, press the right or left arrows to adjust the level desired. The value of brightness displayed will range from -12 to +12.

**Contrast Adjustment**

To adjust contrast level, press the right or left arrows to adjust the level desired. The value of contrast displayed will range from -12 to +12.

**LCD On and Off Adjustment**

The unit's LCD screen can be turned off manually by pressing 'LCD OFF' button. After LCD is turned off, if the screen is touched, LCD will be turn on.

**Day and Night Dimmer Adjustment**

To manually adjust the unit's dimmer to Day, Night or Auto by pressing the corresponding button on screen.

**Reset**

Pressing 'Reset' on the screen will return all tone settings to factory default.

# 6. SYSTEM SETTING

Press the System icon in the bottom of the main screen to access the system setting menus and the left and right arrows to move between the various menus.

**Beep Sound**

Toggles whether a beep tone is heard when a button is pushed.

**Power Off Clock**

Toggles whether Clock information is shown when HU is powered off.

**Language Selection**

Use the left and right arrows to select the system language among English(ENG), Spanish(ESP), Portuguese(POR) and French(FRE).

**Wi-Fi Setup**

Entering into WiFi setting menu to setup with HU SSID Name revision and its Password.

**SWC Custom (Auto Learning)**

Entering into SWC setting menu to setup with each vehicle's own steer wheel control buttons functions; Volume up/down, Mode, Seek up/down, Voice, Call, Hand up.

**Parking Guide**

Toggles whether Rear Camera with Parking Guide is shown when the vehicle is on reverse gear.

**Phone Auto Answer**

Toggles whether activate phone auto answering function while incoming phone calls.

**Ignition**

Toggles whether activate Ignition function to maintain HU power for 10 minutes after ACC Off.

**Parking Guide Adjust**

Parking Guide lines can be adjusted by dragging each edge of lines. After adjustment, if 'SAVE' is pushed, the adjusted parking guide lines are saved. Or if 'INIT' is touched, the parking guide lines are back to default line location.

**Device Name**

Device name can be modified within 16 characteristics.

**Microphone**

Microphone setting can be selected between 'Internal' and 'External'.

**MIC Gain**

MIC Gain value can be ranged from -12 to +12.

**Radio Area**

Use the left and right arrows to select the radio area among Latin-American(LATIN), European(Europe), and North-American(USA).

**AutoLink**

AutoLink function can be either activated or deactivated. If 'AutoLink' is activated, 'CarPlay' and 'Android Auto' will not be operated.

**Factory Reset**

HU is back to Factory Reset status. When 'Factory Reset' is pushed, its warning pop-up sign is shown up, either 'Yes' or 'No'.

**Initial Volume Adjustment**

Touch the white dot on volume level bar and drag to desired level at which the radio will start at whenever the unit is powered on. Values can range from 0 to 40.

To set up each modes' volume level, touch the arrow on each right/left side of screen of 'System Setting', so that adjust the volume level of Radio, USB Movie/Audio, iPod Audio, AV-In, Bluetooth Audio, Alert, Phone Call, Entertainment, Notification, Voice Recognition

**AUX Level Adjustment**

Touch the white dot on Aux level bar and drag to desired level of attached external devices. Values can range from 0 to +3.

**Speed Volume Adjustment**

Use the left and right arrows to choose the volume mode to be used based on the speed of the vehicle (requires connection to vehicles speed sensor). Values – OFF, LOW, MID, HIGH.

**Edit Home Menu**

This allows you to change the order of the widget on the Home Menu.

**Date and Clock Setting**

This option in the systems menu allows you to adjust the date & clock on the main screen. Year, Moth, Day, AM/PM, Hours, Minutes and 12/24H modes can all be selected on this screen.

**Ver. Info**

This allows you to see the version numbers of the software installed in the unit.

# 7. RADIO OPERATION

This section describes the operation in Radio Mode.

**Enter Radio Mode**

In Home Menu, press the button Radio or its icon.

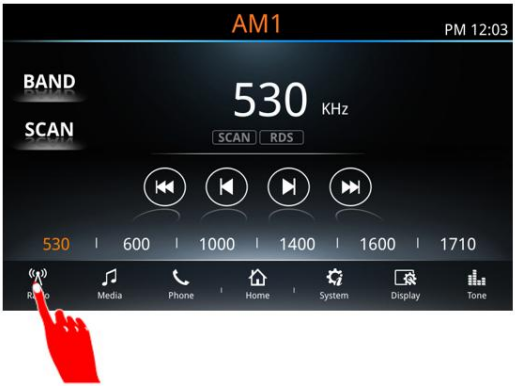

**Band Selection**

This unit has 2 AM and 2 FM bands each capable of storing up to 6 preset stations. To change the band, simply tap the band button on screen. Each time it is tapped it will change the band as indicated below.

FM1 – FM2 – AM1 – AM2

**Manual Tuning**

Use the⏮ and the ⏭ buttons on screen to adjust reception one frequency step up or down in the current Band.

**Seek Tuning**

Use the ⏮ and the ⏭ buttons to activate the seek function of the tuner. The tuner will automatically search up or down depending on the button pressed and stop at the first strong signal it finds in the current band.

**Scan Tuning**

Push the SCAN button on screen to activate the SCAN function, the SCAN icon on the screen will flash while scanning and the unit will automatically scan the current band stopping at each strong signal it finds for 10 seconds before resuming scanning. Push SCAN again to disable this function.

**Autoscan Presets**

Push and hold the SCAN button for 3 seconds to activate the AUTOSCAN function. When activated the unit will automatically scan the band and program the Presets 1 through 6 with the first six strong signals it finds. It will then play each new preset for 5 seconds before returning to preset 1.

**Setting Presets**

To set a radio channel to a preset, simply push and hold on the screen preset for at least 3 seconds while tuned to the channel you are trying to store. There are 6 presets available per band.

**Selecting Presets**

By simply pressing the preset on screen, the unit will tune to the station stored.

# 8. USB MUSIC FILE OPERATION

This section describes the available commands to control and play music files through USB. When a USB device is inserted into the unit's USB external cable, it will automatically play saved music in the root folder. Alternatively when a USB device is already connected, you can either press the 'USB Audio widget'

# 8. USB MUSIC FILE OPERATION (Cont.)

on the Home Menu or the 'USB Audio' on pop-up menu of Media, which is located in bottom line.

- Type of files supported : Check table 1 in section 19. FORMAT AVAILABLES

**Previous Track and Restart**

Pushing the ⏮ button on screen will rewind the current track to its beginning. If it pressed again before 3 seconds has elapsed, it will go to the beginning of the previous track and so on. In this way, it is possible to skip multiple tracks simply by pressing the ⏮ button repeatedly.

**Fast Rewind**

Pushing and holding the ⏮ button on screen will fast rewind the current track. Release button to resume play.

**Next Track**

Pushing the ⏭ button on screen will skip to the beginning of the next track.

**Fast Forward**

Pushing and holding the ⏭ button on screen will fast forward the current track. Release button to resume play.

**Playlist & Folder**

Touch the Folder icon to enter playlist on the right side of playlist, then searching music files manually is available by sliding scroll bar or touching arrows UP/DOWN.

To search song by each folder, there is an additional Folder icon above the scroll bar. Then, all folder list is available to search by sliding scroll bar or touching arrows UP/DONW.

Select a music file or a folder desired by touching the filename or folder name.

**Repeat and Random Function**

# 9. USB PHOTO FILE OPERATION

This section describes the available commands to control and display photo images through USB. Press the 'USB Photo widget' on the Home Menu or the 'USB Photo' on pop-up menu of Media, which is located

# 9. USB PHOTO FILE OPERATION (Cont.)

in bottom line. When the unit is entered into USB Photo, there is folder list on the left side, and photo list is on the right side. Each list can be scrolled independently.

- Type of files supported : Check table 2 in section 19. FORMAT AVAILABLES

**Folder List**

The first folder is root folder, and each folder is shown in orders. When a folder is touched, the folder's Photo List is displayed with file name and thumbnail on the right side.

**Photo List**

A photo is pressed among the Photo List, its full-screen-sized picture is presented on screen. If the full-screen-sized picture is touched again, function menu is presented shortly (about 3 seconds).

a. Return : Back to the Folder & Photo List
b. Play / Pause : Play and pause the current folder's photo sequentially
c. Forward : Pressing the ⏭ button to view the next photo
d. Backward : Pressing the ⏮ button to view the previous photo
e. Save : Save a photo for Wallpaper (Saving 10 wallpaper images in maximum)
f. Display Setting : Display setting menu is popped up.

# 10. USB MOVIE FILE OPERATION

This section describes the available commands on your unit to play video files through USB. Press the 'USB Movie widget' on the Home Menu or the 'USB Movie' on pop-up menu of Media, which is located in bottom line.

- Type of files supported : Check table 3 in section 19. FORMAT AVAILABLES

# 10. USB MOVIE FILE OPERATION (Cont.)

**Buttons & Icon, Text Description**

| Buttons | | | |
|---|---|---|---|
| NO. | DESCRIPTION | TYPE | REMARK |
| 1 | Folder | Image | Enter Folder List |
| 2 | Repeat | Image | A : Repeat all track (Default)<br>F : Repeat selected in folder<br>1 : Repeat selected track |
| 3 | Next/Prev | Image | Go to Next/Previous movie<br>Long key : FR / FF |
| 4 | Play | Image | Play/Pause |
| 5 | Random Play | Image | Random OFF : Random OFF (Default)<br>Random ON : Random ON<br>Folder Random : Random ON in folder |

Repeat all tracks (Default)

Repeat selected track

Repeat selected folder

Random Play OFF (Default)

Random Play ON

Random ON within a folder

| Icon & Text | | | |
|---|---|---|---|
| NO. | DESCRIPTION | TYPE | REMARK |
| a | Title | Image | Indicate Title |
| b | Present time | Font | Indicate present time |
| c | Thumbnail view | Image | Playing in Thumbnail view |
| d | File name | Font | Indicate File name |

**Playlist & Folder**

Touch the Folder icon to enter playlist on the left side of screen, then searching movie files manually is available by sliding scroll bar or touching arrows UP/DOWN.

To search movie by each folder, there is an additional Folder icon above the scroll bar. Then, all folder list is

available to search by sliding scroll bar or touching arrows UP/DONW. Select a folder desired by touching folder name, so that movie file list of the selected folder is shown.

**Full Size Screen**

If a thumbnail view is touched, its full-sized screen is shown. By touching the full-sized screen, function menu is presented shortly (about 3 seconds).

g. Return : Back to thumbnail view
h. Play / Pause : Playing and pausing the current movie file
i. Forward : Pressing the ⏭ button to play the next movie (Long Key : FF)
j. Backward : Pressing the ⏮ button to play the previous movie (Long Key : FR)
k. Repeat / Shuffle : Setting the Repeat and Shuffle function of movie play
l. Foler : Moving to Folder List
m. Display Setting : Display setting menu is popped up.

# 11. AV-IN OPERATION

To enter into AV-IN menu, press the ‘AV-IN widget’ on the Home Menu or the ‘AV-IN’ on pop-up menu of Media, which is located in bottom line.

# 11. AV-IN OPERATION (Cont.)

English

If any external device for audio/video inputting is connected via video input cable, sound is output via speaker and video are output via HU screen. If any external device is not connected, 'No Signal' sign is shown on HU screen.

| With External Device connected | Without External Device connected |
|---|---|
| | 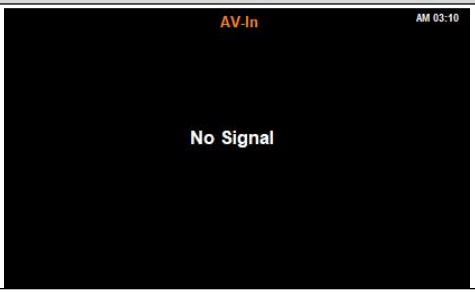 |





While AV-In is on screen, if screen is touched shortly, 'Display Setting' menu is pop-up overlapped with the AV-In screen, such as 'Brightness', 'Contrast', 'LCD ON/OFF', etc.

# 12. Auto Link (Mirroring)

*Auto Link is only available with Android Phone.
To start with Auto Link function, 'AutoLink' function must be activated on 'System Setting'. If a phone is connected with HU via either USB or Wi-Fi, autolink app is operated. If AutoLink pop-up message is shown on the phone, press the start, so that AutoLink is connected with HU.

# 13. iPod OPERATION

This section describes the available commands on your unit to play files in apple devices.

**Enter iPod Audio Mode**

In media menu, press the button 'iPod Audio' or push the icon 'iPod Audio' in Home menu.

Switching to iPod Audio can be done through the Media menu or through the Home menu. When the iPod is not connected the iPod Audio widget and menu selection will not be accessible. The unit will automatically read an iPod when it is connected through the USB port and the unit is powered on. Disconnecting your iPod will return the unit to its previous function i.e. Radio.

# 13. iPod OPERATION (Cont.)

**File Navigation**

**Previous Track and restart**

Pushing the ⏮ button on screen will rewind the current track to its beginning. If it pressed again before 3 seconds has elapsed it will go to the beginning of the previous track and so on. In this way it is possible to skip multiple tracks simply by pressing the ⏮ button repeatedly.

**Fast Rewind**

Pushing and holding the ⏮ button on screen will fast rewind the current track. Release button to resume play.

**Next Track**

Pushing the ⏭ button on screen will skip to the beginning of the next track.

**Fast Forward**

Pushing and holding the ⏭ button on screen will fast forward the current track. Release button to resume play.

**iPod Menu**

Push the folder icon to access the iPod menu where you will be able to access your playlists and songs in various categories.

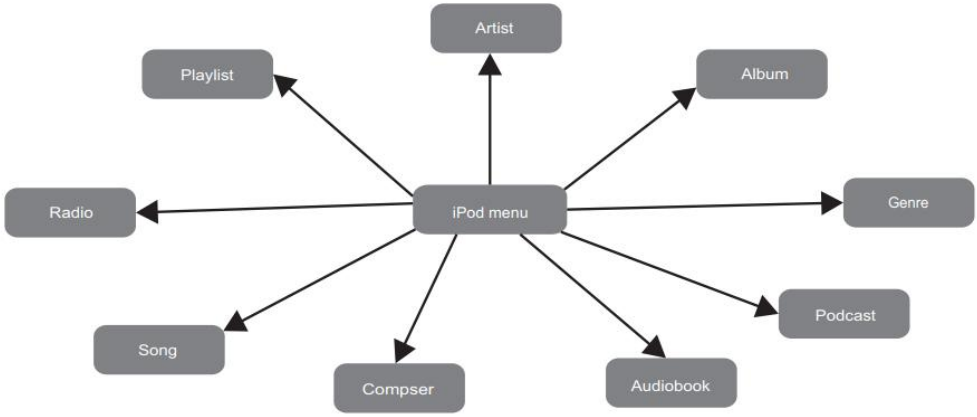


**Note: Recommended to play with original wire**

English

# 14. BLUETOOTH FUNCTION

**12.1 Pairing Phone Management**

**Paring your phone**

On the Phone menu press the Connection button on screen to start pairing the LCD will display "Searching…." for approximately 2 minutes. Using your phones settings menu select HDA301 from the Bluetooth devices list in order to pair with the head unit. You may be prompted to allow downloading of your Contact information.

# 14. BLUETOOTH FUNCTION (Cont.)

**Select Device**

The head unit is capable of storing up to 5 different mobile Bluetooth devices. You can use this menu to select which mobile device your unit is active with.

**Delete Device from List**

Within the selection menu you can delete any of the stored Bluetooth devices by pressing the Delete button by the device's name and confirming Yes or No.

**Remove all Connections**

Also in the selection menu you can remove all connections by pressing the Remove all connections button and confirming OK.

**Automatic Connection to Head Unit**

A mobile device that has been previously paired and connected to the head unit will automatically re-connect every time the head unit is powered on after a short delay. When connected cell phone signal strength and battery strength icons appear in the top right of the screen.

**Go back to Previous Menu**

In every Bluetooth function (Phone, Phonebook, and Audio), going back to previous menu is possible by pressing Return button.

**12.2.1 Phonebook**

Once connected your mobile device's contact list will be downloaded each time the head unit is powered on. Confirmation may be required on some phones. By pressing the Phonebook button on screen, you will

be able to access all the entries in your phone's contact list.
To make a call simply press the contact info on screen and confirm by selecting which phone number to dial.

**Call History**

Press Call History to access your phone's call history, which is a list of contact info up to 20 of the last history of received, made, and missed. By either sliding the list or pressing arrows (UP/DOWN), received call history can be searched manually. The call history is divided into 'Entire List', 'Received Call', 'Calls Made', and 'Missed Call'. Each history can be selected by pressing Tap Menu of 'Call History'.

**Received Call**

It is a list of contact info upon to 20 of the last calls received. (Searching by sliding list or pressing arrows manually) You can make a call by selecting a contact
from the list.

**Calls Made**

It is a list of contact info upon to 20 of the last calls made. (Searching by sliding list or pressing arrows manually) You can make a call by selecting a contact from the list.

# 14. BLUETOOTH FUNCTION (Cont.)

**Missed Call**

It is a list of contact info upon to 20 of the last missed calls. (Searching by sliding list or pressing arrows manually) You can make a call by selecting a contact
from the list.

English

**12.2.2 Phone Menu**

**Dial Number**

Phone number can be dialed manually in 'Phone' Menu. Press 'Call' button to start its phone-call.

**Answering & Hanging-up phone-call**

Incoming call can be answered directly from the head unit, when its ringtone is heard through the vehicle's speakers. When a phone-call is come in, the screen will show the contact info or number calling with 'Call' icon and 'Hang up' icon. Press 'Call' icon to answer the phone-call or 'Hang up' icon to reject / finish the phone-call.

**Audio Handling while in Calling Mode**

Pushing the 'Speaker Mute' button on screen will mute the vehicle speakers transferring the audio back to the cell phone speaker. This can be toggled back and forth.
Pushing the 'Mute MIC' button on screen will mute the unit's internal / external microphone, so that the caller cannot hear any sound of the vehicle. This can be also toggled, so to restore normal communication. Internal / External Microphone can be set in the 'System' Setting Menu.

**12.3 Bluetooth Audio**

Press the 'Bluetooth Audio widget' on the Home Menu or the 'Bluetooth Audio' on pop-up menu of Media, which is located in bottom line.

**Rewind & Fast Forward**

It is possible to navigate tracks with the ⏮ and ⏭ buttons on screen.

**Track Information**

Different information will automatically appear on the screen about the track being played such as Title, Artist, and Album.

**Playlist & Folder**

Touch the Folder icon to enter playlist on the right side of playlist, then searching playlist manually is available by sliding scroll bar or touching arrows UP/DOWN.

To search song by each folder, there is 'Folder' bottom line of List.

# 15. Apple CarPlay

English

Available on select cars, Apple CarPlay is a smarter, safer way to use your iPhone in the car. Apple CarPlay takes the things you want to do with your iPhone while driving and puts them right on your car's built-in display. You can get directions, make calls, send and receive messages, and listen to music, all in a way that allows you to stay focused on the road. Just connect your iPhone and go.

Apple CarPlay features Siri voice control and is specially designed for driving scenarios. Apple CarPlay also works with your car's controls buttons, or touchscreen. And the apps themselves have been reimagined for the car, so you can use them while your eyes and hands stay where they belong.

**14.1 Enter Apple CarPlay mode.**

Connecting any Apple CarPlay capable device to the unit via either Wi-Fi or USB will automatically bring up the units Apple CarPlay screen or if it is already connected by pressing the Apple CarPlay widget on the main screen. To connect iPhone device via WiFi, its BT paring should be started, and when a Pop-up message 'Enable Apple CarPlay', 'Enable CarPlay' should be pressed for Wireless CarPlay.

### 14.2 Navigation in Apple CarPlay Mode

The navigation in Apple CarPlay mode depends on available applications by Apple company. For more information, check website.: http://www.apple.com/ios/carplay/

### 14.3 Principal Apple CarPlay Mode

**PHONE**: Apple CarPlay uses iPhone contacts to help you make calls. Use the "Show contacts" for your favorite display, your recent calls, your contacts list, keyboard and voice mail.
**MUSIC**: Use Music to access music from your iPhone (including songs, artists, albums and playlists). Or synchronize it with Radio. Apple CarPlay also allows you to use other audio apps you download the podcasts and iPhone to play music or listen to the radio. Use the "Now Playing" screen to control playback, or use the controls on the wheel of your car.
**MAPS**: Get step-by-step, get traffic conditions and know the approximate travel time. Apple CarPlay generates possible destinations from addresses of your email, your text messages, contacts and calendars, and based the places you go often. You can also search for a location or use the locations included in your bookmarks. You can even use other apps for obtaining directions. Apple CarPlay tell you when to redisplay your information.
**MESSAGES**: When you open Messaging, Siri is automatically activated to read your incoming messages or allows you to dictate a new message. Let Siri help you send, listen and reply to text messages.
**NOW PLAYING**: When exist some music application is playing, in this menu is possible to access directly.
**RETURN**: In main screen for Apple CarPlay application is include HJA icon, push this button in order to return to main screen for Head Unit, or disconnect apple device.
**PODCAST**: Use the Podcasts app to listen to podcasts on the iPhone.

# 15. Apple CarPlay (Cont.)

**AUDIOBOOKS**: Use the Audiobooks app to listen Audiobooks on the iPhone.
**SIRI AND MENU**: Use this button to play Siri and return to main menu.

**NOTE: For wired CarPlay via USB connection is recommended use original wires for faster data transferences.**

English

# 16. Android Auto

The Android Auto was designed with safety in mind. With a simple and intuitive interface, integrated steering wheel controls, and powerful new voice actions, it's designed to minimize distraction so you can stay focused on the road. To use Android Auto, you need an Android Auto compatible vehicle or aftermarket radio and an Android phone running 5.0 (Lollipop) or higher. When you connect your Android phone to the compatible vehicle or radio, Android Auto will display applications on the vehicle's screen. For more information about Android Auto compatibility, please visit the website: support.google.com/androidauto

### 15.1 Enter Android Auto mode

Connect between the head unit and the device compatible with Android Auto application via either Wi-Fi or USB. To connect Android phone via WiFi, BT pairing should be started in advance. Then, it is automatically connected Wireless Android Auto. Tthe head unit screen shows set-up setting in mobile device in order to match information between both devices. After this setting configuration, the head unit and mobile device are playing in Android Auto application.
(The setting configuration is exclusive for the first time.)

### 15.2 Principal Android Auto Mode

**MAPS**: Get step-by-step, get traffic conditions and know the approximate travel time. Android Auto generates possible destinations from addresses of your email, your text messages, contacts and calendars, and based the places you go often. You can also search for a location or use the locations included in your bookmarks. You can even use other apps for obtaining directions. Android Auto tell you when to re-display your information.

**PHONE**: Android Auto uses Phone contacts to help you make calls. Use the 'Show contacts" for your favorite display, your recent calls, your contact list, keyboard and voice mail.

**MAIN**: Use this button to return to beginning menu.

**GOOGLE MUSIC**: Use Music to access music from your Phone (including songs, artists, albums and playlists). Or synchronize it with Radio. Android Auto also allows you to use other audio apps you download the podcasts and Phone to play music or listen to the radio.

**MENU**: This menu is possible to see different setting in Android Auto applications.

If the settings are done, it is possible to enter to Android Auto mode by pushing Android Auto icon in screen of head unit.

# 16. Android Auto (Cont.)

**NOTE: If the mobile device is reset with information Android Auto, which is connected with head unit previously, the device must do setting configuration again.**

English

### 15.3 Navigation in Android Auto mode

The navigation in Android Auto mode depends on available application by Google company. For more information, check website.: https://www.android.com./auto/

### 15.4 Exit from Android Auto mode

In Android Auto menu screen, there is 'HJA' icon for return to main screen of head unit, or disconnect between mobile device and head unit.

**NOTE: For wired Android Auto via USB connection is recommended use original wires for faster data transferences.**

# 17. GENERAL PRECAUTION

1. This device has highly-sensitive buttons; avoid applying excessive force as this can damage the unit and reduce button life.
2. Do not open the unit. The devices interior parts cannot be repaired by the user. Please contact your dealer or an authorized service center if there is an issue.
3. Use a soft, dry cloth to clean the control panel and screen, NEVER use rough cloth, thinner, gasoline,

alcohol etc. If necessary, use a soft damp cloth and carefully clean the unit.
4. Do not insert foreign objects (screwdrivers, knives, metal objects etc.) into the unit inputs as they may damage the device voiding the warranty.

# 18. RECOMENDATIONS FOR USB DEVICE

When using USB devices:
1. Only use certified USB devices with this device.
2. To prevent damage to the USB device either change the mode to another (non-USB) mode or power off the unit.
3. The head unit is capable of reading USB protocols 1.1 and 2.0. Verify your device is compatible.
4. If the USB device cannot be read by the unit, please confirm the following:
a. The USB device has been properly formatted.
b. Make sure only MP3, WMA or AAC files are stored in the corresponding MP3, WMA and AAC file folders
5. You are using a certified USB cable to attach the USB device to head unit.

# 19. FORMAT AVAILABLES

**Table 1**

| Audio | | | | |
|---|---|---|---|---|
| **File Format** | **Version / Layer** | **BIT Rate** | **Sampling** | **Support Status** |
| ACC | MPEG2 | 8 – 384 Kbps | 8 -48 Khz | OK |
| | MPEG2 | 8 – 384 Kbps | 8 -48 Khz | OK |
| WMA | WMA9 | 8 – 384 Kbps | 8 -48 Khz | OK |
| | WMA10 Pro | | | Not Support |
| | WMA Lossless | | | Not Support |
| FLAC | Flac | 8 – 384 Kbps | 8 -48 Khz | OK |
| MP3 | MPEG1/L1 | 32 – 384 Kbps | 32/44.1/48 Khz | OK |
| | MPEG2/L1 | 32 – 256 Kbps | 16/22.05/24 Khz | OK |
| | MPEG1/L2 | 32 – 384 Kbps | 32/44.1/48 Khz | OK |
| | MPEG/L2 | 32 – 160 Kbps | 16/22.05/24 Khz | OK |
| | MPEG/L3 | 32 – 320 Kbps | 32/44.1/48 Khz | OK |
| | MPEG2/L3 | 8 – 160 Kbps | 16/22.05/24 Khz | OK |
| | MPEG2.5 | 8 – 64 Kbps | 8/11.05/12 Khz | OK |
| RA | | 16 – 320 | 11 – 48 | Not Support |
| RM | | 20 – 32 | 44.1 | Not Support |

**Table 2**

| Picture | | |
|---|---|---|
| **File Format** | **Resolution Ratio** | **Support Status** |

English

| | | | |
|---|---|---|---|
| JPG | 5000 x 5000<br>6000 x 6000<br>800 x 500<br>5756 x 852<br>496 x 340<br>1024 x 819<br>1920 x 1200<br>800 x 500<br>1440 x 900<br>593 x 830<br>790 x 850<br>502 x 397<br>1024 x 768 | 1345 x 1600<br>1024 x 768<br>1024 x 768<br>301 x 206<br>800 x 500<br>800 x 500<br>1920 x 1200<br>800 x 600<br>1024 x 768<br>1600 x 1200<br>1600 x 1200<br>690 x 537<br>800 x 800 | OK |

# 19. FORMAT AVAILABLES (Cont.)

English

**Table 2**

| Picture | | | |
|---|---|---|---|
| **File Format** | **Resolution Ratio** | | **Support Status** |
| GIF | 1000 x 1000<br>5000 x 5000<br>370 x 315<br>500 x 433<br>725 x 999<br>240 x 320 | 600 x 450<br>240 x 320<br>400 x 400<br>300 x 400<br>725 x 660 | OK |
| PNG | 555 x 416<br>553 x 415<br>256 x 256<br>256 x 256<br>256 x 256 | 256 x 256<br>1945 x 1219<br>4090 x 4090<br>5000 x 5000 | OK |
| BMP | 246 x 184<br>443 x 441<br>512 x 481<br>300 x 240<br>200 x 200<br>720 x 480<br>512 x 416 | 512 x 488<br>128 x 128<br>3224 x 2448<br>5000 x 5000<br>6000 x 6000<br>8000 x 8000 | OK |

Table 3

| VIDEO | | | | | | | | |
|---|---|---|---|---|---|---|---|---|
| Media Type | Video Encoding Type | | Video Bit Rate (Max.) | FPS | Resolution (Max.) | Audio Encode Type | Audio Bit Rate | Support Status |
| ASF | WMV(VC1) | WMV3(9) | 10Mbps | 15 – 30 | 720x480 | MP3<br>WMA11 | MP3 : 8-320Kbps | OK |
| MKV | AVC1 | H264 | 5000Mbps | 15 – 30 | 1280x720 | MP3<br>AAC<br>U8/U16 | MP3 : 8-320Kbps<br>AAC : 8-384Kbps<br>U8/U16 : SampleRate | OK |
| | MPGE4 | MP4V | 10Mbps | 15 – 30 | 1280x720 | | | OK |
| AVI | MPEG7 | MP4V | 15Mbps | 15 – 30 | 1280x720 | MP3<br>AAC<br>WMA16 | MP3 : 8-320Kbps<br>AAC : 8-384Kbps<br>WMA16 : SampleRate | OK |
| | MPEGB | Xvid | | | | MP3<br>AAC<br>WMA17 | MP3 : 8-320Kbps<br>AAC : 8-384Kbps<br>WMA17 : 8-384Kbps | OK |
| | MPEG1-2 | MPGV | | | | | | |
| | AVC1 | H264 | 5000Kbps | | | | | |
| | MJPEG | JPEG | 15Mbps | | | | | |
| | WMV(CV1) | WMV3(9) | 10Mbps | | 720x480 | | | |
| MP4 | AVC1 | H264 | 5000Kbps | 15 – 30 | 1280x720 | MP3<br>AAC | MP3 : 8-320Kbps<br>AAC : 8-384Kbps | OK |
| | MPEG4 | MP4V | 15Mbps | | | | | OK |
| MPG | MPEG1-2 | MPGV | 15Mbps | 15 – 30 | 1280x720 | MP3 | MP3 : 8-320Kbps | OK |
| WMV | WMV | WMV3(9) | 10Mbps | 15 – 30 | 720x720 | MP3<br>WMA11 | MP3 : 8-320Kbps<br>WMA9 : 8-384Kbps | OK |
| | | WMVA | | | | | | |
| | | WMV1(VC1) | | | | | | |
| | | WVC1 | | | | | | |
| | | WMVP | | | | | | |
| MOV | AVC1 | H264 | 5000Kbps | 15 – 30 | 1280x720 | MP3<br>AAC | MP3 : 8-320Kbps<br>AAC : 8-384Kbps | OK |

# 20. USB DEVICE AVAILABLES

| No. | Model Code | Memory Size | No. | Model Code | Memory Size | No. | Model Code | Memory Size |
|---|---|---|---|---|---|---|---|---|
| 1 | DT101G2/32GBZ DataTraveler | 32G | 5 | DT101G2/2GBZ DataTraveler | 2G | 9 | Sony USB USM4GL | 4G |
| 2 | DT101G2/16GBZ DataTraveler | 16G | 6 | Sony USB USM32GL | 32G | 10 | Sony USB USM2GL | 2G |
| 3 | DT101G2/8GBZ DataTraveler | 8G | 7 | Sony USB USM16GL | 16G | 11 | Sandisk | 16G |
| 4 | DT101G2/4GBZ DataTraveler | 4G | 8 | Sony USB USM8GL | 8G | 12 | Sandisk | 32G |

English

# 21. TROUBLE SHOOTING

## General

| Problem | Cause | Measure |
|---|---|---|
| Power does not turn on. (No sound is produced.) | Fuse is blown. | Replace with a fuse of the same amperage. If the fuse blows again, consult your store of purchase. |
| | Incorrect wiring | Consult your installation center |

## USB Device

| Problem | Cause | Measure |
|---|---|---|
| USB device cannot be inserted. | The USB device has been | Reversing the connection |

| | | |
|---|---|---|
| | inserted with wrong direction. | direction of the USB device, try it again. |
| | The USB connector is broken. | Replace with a new USB device. |
| USB device is not recognized. | The USB device is damaged. | Disconnect the USB device and reconnect. If the device is still not recognized, try replacing with a different USB device. |
| | Connectors are loose. | |
| No sound heard with the display “NO FILE” shown. | No MP3/WMA file is stored in the USB device. | Store these files properly in the USB device. |
| Sound skips or is noisy. | MP3/WMA files are not encoded properly. | Use MP3/WMA files encoded properly. |

### Bluetooth

| Problem | Cause | Measure |
|---|---|---|
| Cannot pair the Bluetooth enable device with the car audio system. | The device does not support the profiles required for the system. | Use another device to connect. |
| | The Bluetooth function of the device is not enabled. | Refer to the user manual of device for how to enable the function. |
| The audio quality is poor after connection with a Bluetooth enabled device. | The Bluetooth reception is poor. | Move the device closer to the car audio system or remove any obstacle between the device and the system. |

# 21. TROUBLE SHOOTING (Cont.)

English

### TFT Screen

| Problem | Cause | Measure |
|---|---|---|
| The image is not displayed. | The parking brake is not engaged. | Check that the parking brake is engaged. |
| The display is dark. | The operating condition is not good. | The temperature inside the vehicle may be 0℃ or lower. Set to an appropriate temperature (25℃ or so) and check it again. |
| | The headlight of the vehicle is lit. | The display is made dark at night to prevent the glare(When the headlight of time vehicle is lit in the daytime, the display gets dark.) |

### CarPlay / Android Auto

| Problem | Cause | Measure |
|---|---|---|
| Malfunction to application of CarPlay / Android Auto. | Some application needs mobile data to work properly. | Activate the mobile data or connect to Wi-Fi. |
| | Using generic USB wire that do not fast data transferences or wrong condition. | Replace the USB wire to original USB wire for faster data transferences (the cable provided with the iPhone / Android device or the same brand) and the wire should be in good condition. |

# 22. FCC WARNING STATEMENTS

FCC WARNING

This device complies with part 15 of the FCC Rules. Operation is subject to the following two conditions: (1) this device may not cause harmful interference, and (2) this device must accept any interference received, including interference that may cause undesired operation.

Any changes or modifications not expressly approved by the party responsible for compliance could void the user's authority to operate the equipment.

NOTE: This equipment has been tested and found to comply with the limits for a Class B digital device, pursuant to Part 15 of the FCC Rules. These limits are designed to provide reasonable protection against harmful interference in a residential installation. This equipment generates, uses and can radiate radio frequency energy and, if not installed and used in accordance with the instructions, may cause harmful interference to radio communications. However, there is no guarantee that interference will not occur in a particular installation.

If this equipment does cause harmful interference to radio or television reception, which can be determined by turning the equipment off and on, the user is encouraged to try to correct the interference by one or more of the following measures:

-- Reorient or relocate the receiving antenna.

-- Increase the separation between the equipment and receiver.

-- Connect the equipment into an outlet on a circuit different from that to which the receiver is connected.

-- Consult the dealer or an experienced radio/TV technician for help.

To maintain compliance with FCC's RF Exposure guidelines, This equipment should be installed and operated with minimum distance between 20cm the radiator your body: Use only the supplied antenna.

# 23. SPECIFICATIONS

English

**General**

1. Power Supply: Operation 10. 0 to 16.0 V
2. Output Power(Max): 45W x 4; 14.4V, CD 1KHz/0dB
3. Speaker Load: 4 Ohms 4CH
4. AM/FM Antenna: 80PF/750Ohm
5. Backup Current: Max 1mA

**AM**

1. Frequency Range: 530 – 1710KHz
2. Usable Sensitivity: Min 32 dBuV
3. Image Reject: Min 50dB
4. IF. Rejection: Min 50dB
5. Bandwidth: 8±3KHz
6. Selectivity: Min 50dB
7. Automatic Gain Control: Min 45dB
8. Distortion: Max 2.0%
9. S/N: Min 40dB
10. Auto Stop Sensitivity(DX): 40±6dBuV
11. Frequency Response: -7±3dB@ 100Hz
    0dB@ 1KHz
    -5±3dB@ 2KHz

**AUX**

1. Signal to Noise Ratio: >55dB
2. Distortion: Max 1.0%
3. Frequency Response;
   0±5dB@ 20Hz
   0±5dB@ 100Hz
   0dB@ 1KHz
   0±5dB@ 10KHz
   0±5dB@ 20KHz
4. Loudness VOL STEP 10;
   +8±2dB@ 100Hz
   0±1dB@ 1KHz
   +4±2dB@ 10KHz

**USB**

1. Frequency Response;
   0±3dB@ 17Hz
   0±3dB@ 127Hz
   0dB@ 1KHz
   0±3dB@ 10KHz

| | |
|---|---|
| **FM**<br>1. Frequency Range: 87.5 – 107.9MHz<br>2. Usable Sensitivity: Min 15 dBuV<br>3. -3dB Limiting Sensitivity: Min 15 dBuV<br>4. Image Rejection: Min 45dB<br>5. AM Suppression: Min 45dB<br>6. IF. Rejection: Min 70dB<br>7. Stereo Separation: 22 +5/-7 dB<br>8. Separation 40dBuV: 12±5dB<br>9. Frequency Response: 0±5dB@ 50Hz<br>0dB@ 1KHz<br>0±5dB@ 7KHz<br>10. Distortion: Max 1.0%<br>11. S/N: Min 45dB<br>12. Auto Stop Sensitivity(DX): 35±6dBuV | 2. Distortion: Max 0.4%<br>3. Signal to Noise Ratio: Min 70dB<br><br>**Bluetooth**<br>1. Frequency Response;<br>0±3dB@ 100Hz<br>0dB@ 1KHz<br>0±3dB@ 10KHz<br>2. Distortion: Max 3.0%<br>3. Singal to Noise Ratio: Min 35dB<br><br>**LCD**<br>1. Contrast Ratio: Min 600CR<br>2. Luminance: Min 450cd/$m^2$<br>3. Color Chromaticity;<br>Wx: 0.31+/-0.05<br>Wy: 0.35+/-0.05<br>Rx: 0.62+/-0.05<br>Ry: 0.34+/-0.05<br>Gx: 0.28+/-0.05<br>Gy: 0.54+/-0.05<br>Bx: 0.14+/-0.05<br>By: 0.13+/-0.05 |

# 23. SPECIFICATIONS (Cont.)

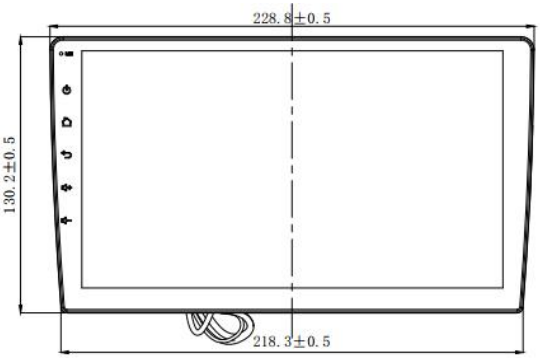


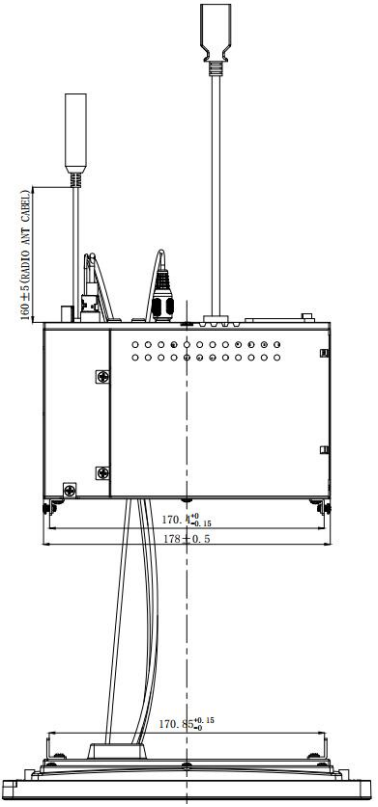


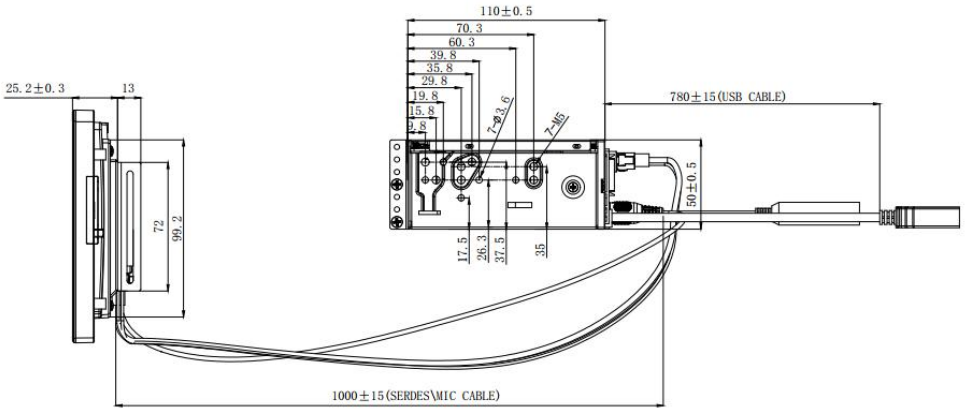


**HDA301 Dimensions:**
**HDA301 Weight: 2Kg**
**(Including Accessary)**

# 24. WIRE CONNECTION GUIDE

**Note: Before installing, be sure to disconnect the negative cable of the car battery. When connect all accessories and USB cable, be sure to fix with the clamp.**

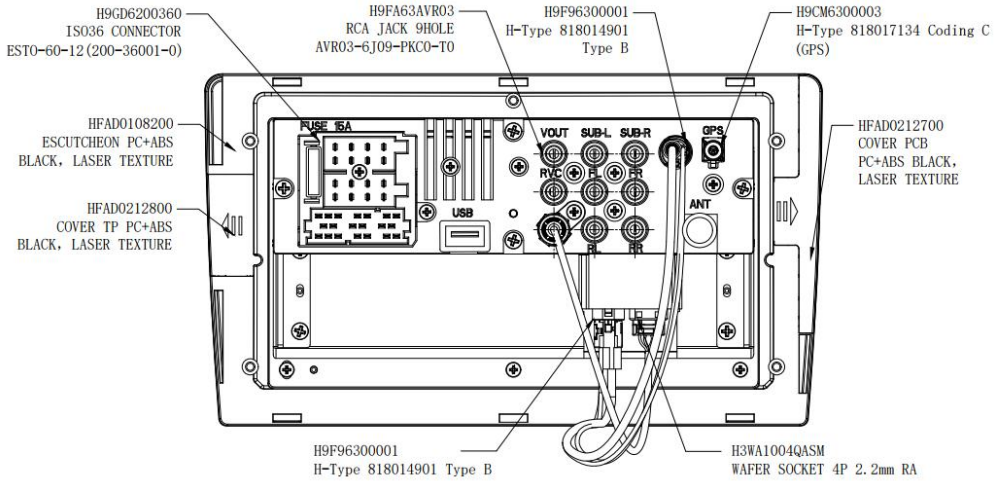


| Split Type Mounting | Top/Bottom assembled Mounting |
|---|---|
| 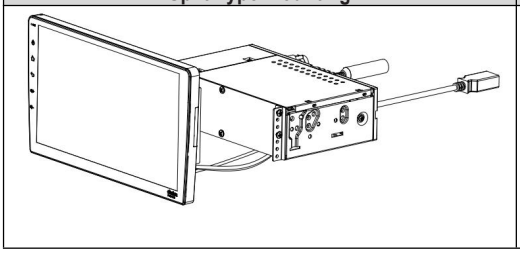 | 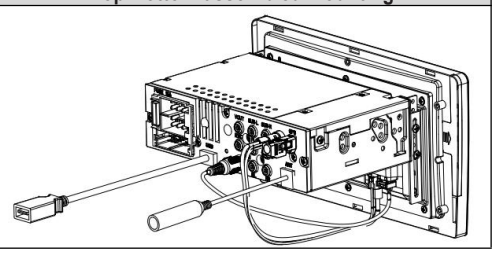 |

# 24. WIRE CONNECTION GUIDE (Cont.)

## Main Connector

| Pin No | Name | Pin No | Name | REMARK |
|---|---|---|---|---|
| C1 | CAN_L | C2 | CAN_H | |
| C3 | GND | C4 | SWRC_A | |
| C5 | SWRC_B | C6 | SWRC_GND | |
| C7 | EXT_MIC_SIG | C8 | EXT_MIC-GND | |
| C9 | AV-V | C10 | AV-R | |
| C11 | AV-GND | C12 | AV-L | |
| C13 | DTV_RX | C14 | DTV_TX | |
| C15 | GND | C16 | DTV_AR | |
| C17 | DTV_VIN | C18 | GND | |
| C19 | DTV_AL | C20 | DTV_VCC | |
| | | | | |
| B1 | SPKR RR (+) | B2 | SPKR RR (-) | |
| B3 | SPKR FR (+) | B4 | SPKR FR (-) | |
| B5 | SPKR FL (+) | B6 | SPKR FL (-) | |
| B7 | SPKR RL (+) | B8 | SPKR RL (-) | |
| | | | | |
| A1 | SPEED PULSE | A2 | BACK GEAR | |
| A3 | PKB | A4 | ACC | |
| A5 | AMP/ANT_B+ | A6 | ILL | |
| A7 | BAT_B+ | A8 | GROUND | |

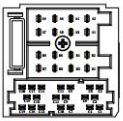

## RCA Jack

| Pin No | Name | Pin No | Name | REMARK |
|---|---|---|---|---|
| A1-S | Lineout-RR | A1-G | GND | |
| A2-S | Lineout-FR | A2-G | GND | |
| A3-S | Sub woofer-R | A3-G | GND | |
| B1-S | Lineout-RL | B1-G | GND | |
| B2-S | Lineout-FL | B2-G | GND | |
| B3-S | Sub woofer-L | B3-G | GND | |
| C1-S | INT_MIC | C1-G | GND | |
| C2-S | RVC VIN | C2-G | GND | |
| C3-S | VOUT | C3-G | GND | |

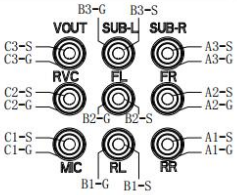

**HJ Automotive Electronics Co., Ltd.**

Copyright © 2025 HJ Automotive Electronics Co., Ltd.
Printed in China