FCC TEST REPORT

For

JWIT Corporation Limited
Commercial Dartboard Machine
Test Model: EDmini Max

Prepared for	:	JWIT Corporation Limited
Address	:	6F., NO.203, SEC. 2, BADE RD., ZHONGSHAN DIST., TAIPEI CITY 10491, TAIWAN
Prepared by	:	Shenzhen LCS Compliance Testing Laboratory Ltd.
Address	:	101, 201 Bldg A & 301 Bldg C, Juji Industrial Park Yabianxueziwei, Shajing Street, Baoan District, Shenzhen, 518000, China
Tel	:	(+86)755-82591330
Fax	:	(+86)755-82591332
Web	:	www.LCS-cert.com
Mail	:	webmaster@LCS-cert.com
Date of receipt of test sample	:	March 25, 2025
Number of tested samples	:	2
Sample No.	:	A2503251021-1, A2503251021-2
Serial number	:	Prototype
Date of Test	:	March 25, 2025 ~ April 28, 2025
Date of Report	:	April 29, 2025

FCC TEST REPORT
FCC CFR 47 PART 15 C(15.247)

Report Reference No.	:	**LCSA03255143EA**
Date of Issue	:	April 29, 2025
Testing Laboratory Name	:	**Shenzhen LCS Compliance Testing Laboratory Ltd.**
Address	:	101, 201 Bldg A & 301 Bldg C, Juji Industrial Park Yabianxueziwei, Shajing Street, Baoan District, Shenzhen, 518000, China
Testing Location/ Procedure	:	Full application of Harmonised standards ■ Partial application of Harmonised standards □ Other standard testing method □
Applicant's Name	:	**JWIT Corporation Limited**
Address	:	6F., NO.203, SEC. 2, BADE RD., ZHONGSHAN DIST., TAIPEI CITY 10491, TAIWAN
Test Specification		
Standard	:	FCC CFR 47 PART 15 C(15.247)
Test Report Form No.	:	TRF-4-E-147 A/0
TRF Originator	:	Shenzhen LCS Compliance Testing Laboratory Ltd.
Master TRF	:	Dated 2011-03

Shenzhen LCS Compliance Testing Laboratory Ltd. All rights reserved.
This publication may be reproduced in whole or in part for non-commercial purposes as long as the Shenzhen LCS Compliance Testing Laboratory Ltd. is acknowledged as copyright owner and source of the material. Shenzhen LCS Compliance Testing Laboratory Ltd. takes no responsibility for and will not assume liability for damages resulting from the reader's interpretation of the reproduced material due to its placement and context.

EUT Description	:	**Commercial Dartboard Machine**
Trade Mark	:	EDARTS
Test Model	:	EDmini Max
Ratings	:	Input: 120V~ 60Hz 100W
Result	:	**PASS**

Compiled by:	**Supervised by:**	**Approved by:**
Ling.Zhu	Jack Liu	Gavin Liang
Ling Zhu/ Administrator	Jack Liu/ Technique principal	Gavin Liang/ Manager

FCC -- TEST REPORT

Test Report No. : **LCSA03255143EA**	April 29, 2025 Date of issue

EUT.....	: Commercial Dartboard Machine
Test Model.....	: EDmini Max
Applicant.....	**: JWIT Corporation Limited**
Address.....	: 6F., NO.203, SEC. 2, BADE RD., ZHONGSHAN DIST., TAIPEI CITY 10491, TAIWAN
Telephone.....	: /
Fax.....	: /
Manufacturer.....	**: Dongguan Dayin Plastic Products Co., LTD**
Address.....	: No. 220, Zhen'an West Road, Changan Town, ShangJiao District, Dongguan City, China
Telephone.....	: /
Fax.....	: /
Factory.....	**: Dongguan Dayin Plastic Products Co., LTD**
Address.....	: No. 220, Zhen'an West Road, Changan Town, ShangJiao District, Dongguan City, China
Telephone.....	: /
Fax.....	: /

Test Result	**PASS**

The test report merely corresponds to the test sample.

It is not permitted to copy extracts of these test result without the written permission of the test laboratory.

Revision History

Report Version	Issue Date	Revision Content	Revised By
000	April 29, 2025	Initial Issue	--

TABLE OF CONTENTS

1. GENERAL INFORMATION 6
1.1. DESCRIPTION OF DEVICE (EUT) 6
1.2. SUPPORT EQUIPMENT LIST 7
1.4. DESCRIPTION OF TEST FACILITY 7
1.5. STATEMENT OF THE MEASUREMENT UNCERTAINTY 7
1.6. MEASUREMENT UNCERTAINTY 8
1.7. DESCRIPTION OF TEST MODES 8
2. TEST METHODOLOGY 10
2.1. EUT CONFIGURATION 10
2.2. EUT EXERCISE 10
2.3. GENERAL TEST PROCEDURES 10
2.4. TEST SAMPLE 10
3. SYSTEM TEST CONFIGURATION 11
3.1. JUSTIFICATION 11
3.2. EUT EXERCISE SOFTWARE 11
3.3. SPECIAL ACCESSORIES 11
3.4. BLOCK DIAGRAM/SCHEMATICS 11
3.5. EQUIPMENT MODIFICATIONS 11
3.6. TEST SETUP 11
4. SUMMARY OF TEST RESULTS 12
5. TEST RESULT 13
5.1. 6 DB SPECTRUM BANDWIDTH MEASUREMENT 13
5.2. RADIATED EMISSIONS MEASUREMENT 14
5.3. MAXIMUM PEAK CONDUCTED OUTPUT POWER MEASUREMENT 27
5.4. POWER SPECTRAL DENSITY MEASUREMENT 28
5.5. BAND EDGE MEASUREMENTS AND CONDUCTED SPURIOUS EMISSIONS TEST 30
5.6. ON TIME AND DUTY CYCLE 31
5.7. EMISSIONS IN RESTRICTED BAND 32
5.8. AC POWER LINE CONDUCTED EMISSIONS 34
5.9. ANTENNA REQUIREMENTS 37
6. LIST OF MEASURING EQUIPMENTS 38
7. TEST SETUP PHOTOGRAPHS OF EUT 39
8. EXTERIOR PHOTOGRAPHS OF THE EUT 39
9. INTERIOR PHOTOGRAPHS OF THE EUT 39

1. GENERAL INFORMATION

1.1. Description of Device (EUT)

EUT	: Commercial Dartboard Machine
Test Model	: EDmini Max
Ratings	: Input: 120V~ 60Hz 100W
Hardware Version	: 1.0
Software Version	: 1.0
WIFI(2.4G Band)	:
Frequency Range	: 2412MHz~2462MHz
Channel Number	: 11 Channels for 20MHz bandwidth (2412~2462MHz) 7 Channels for 40MHz bandwidth (2422~2452MHz)
Channel Spacing	: 5MHz
Modulation Type	: IEEE 802.11b: DSSS (CCK, DQPSK, DBPSK) IEEE 802.11g: OFDM (64QAM, 16QAM, QPSK, BPSK) IEEE 802.11n: OFDM (64QAM, 16QAM, QPSK, BPSK) IEEE 802.11ax: OFDMA (1024QAM, 256QAM, 64QAM, 16QAM, QPSK, BPSK)
Antenna Description	: External Antenna, 5.42dBi(Max.)

Note: For a more detailed antenna description, please refer to the antenna specifications or the antenna report provided by the customer.

1.2. Support equipment List

Manufacturer	Description	Model	Serial Number	Certificate
---	AC/DC ADAPTER	JKX-1530	---	FCC

1.3 External I/O Cable

I/O Port Description	Quantity	Cable
Power Port	1	N/A
LAN Port	1	N/A

1.4. Description of Test Facility

NVLAP Accreditation Code is 600167-0.
FCC Designation Number is CN5024.
CAB identifier is CN0071.
CNAS Registration Number is L4595.
Test Firm Registration Number: 254912.

The 3m-Semi anechoic test site fulfils CISPR 16-1-4 according to ANSI C63.4:2014 and CISPR 16-1-4:2010 SVSWR requirement for radiated emission above 1GHz.

1.5. Statement of the Measurement Uncertainty

The data and results referenced in this document are true and accurate. The reader is cautioned that there may be errors within the calibration limits of the equipment and facilities. The measurement uncertainty was calculated for all measurements listed in this test report acc. To CISPR 16 – 4 “Specification for radio disturbance and immunity measuring apparatus and methods – Part 4: Uncertainty in EMC Measurements” and is documented in the LCS quality system acc. To DIN EN ISO/IEC 17025. Furthermore, component and process variability of devices similar to that tested may result in additional deviation. The manufacturer has the sole responsibility of continued compliance of the device.

1.6. Measurement Uncertainty

Test Item		Frequency Range	Uncertainty	Note
Radiation Uncertainty	:	9KHz~30MHz	±3.10dB	(1)
		30MHz~200MHz	±2.96dB	(1)
		200MHz~1000MHz	±3.10dB	(1)
		1GHz~26.5GHz	±3.80dB	(1)
		26.5GHz~40GHz	±3.90dB	(1)
Conduction Uncertainty	:	150kHz~30MHz	±1.63dB	(1)
Power disturbance	:	30MHz~300MHz	±1.60dB	(1)
Output power	:	1GHz-40GHz	±0.57dB	(1)
Power Spectral Density	:	1GHz-40GHz	±1.2dB	(1)
Occupied Channel Bandwidth	:	1GHz-40GHz	±5%	(1)
Conducted RF Spurious Emission	:	9kHz-40GHz	±1.80dB	(1)
Emissions in Restricted Bands	:	1GHz-40GHz	±2.47dB	(1)

(1). This uncertainty represents an expanded uncertainty expressed at approximately the 95% confidence level using a coverage factor of k=2.

1.7. Description of Test Modes

The EUT has been tested under operating condition.

This test was performed with EUT in X, Y, Z position and the worst case was found when EUT in Y position.

AC conducted emission pre-test at both at AC 120V/60Hz and AC 240V/50Hz modes, recorded worst case at AC 120V/60Hz;

Worst-case mode and channel used for 150 KHz-30 MHz power line conducted emissions was determined to be IEEE 802.11b mode (Low Channel).

Worst-case mode and channel used for 9 KHz-1000 MHz radiated emissions was determined to be IEEE 802.11b mode (Low Channel).

Worst-Case data rates were utilized from preliminary testing of the Chipset, worst-case data rates used during the testing are as follows:

IEEE 802.11b Mode: 1 Mbps, DSSS.
IEEE 802.11g Mode: 6 Mbps, OFDM.
IEEE 802.11n HT20 Mode: MCS0, OFDM.
IEEE 802.11n HT40 Mode: MCS0, OFDM.
IEEE 802.11ax HEW20 Mode: HE1MCS0, RU242, OFDMA.
IEEE 802.11ax HEW40 Mode: HE1MCS11, RU484, OFDMA.
Note: for 802.11ax mode, all RU are tested, and only the worst RU(full RU)are recorded in the report.

Channel List & Frequency

IEEE 802.11b/g/n HT20/ax HEW 20

Frequency Band	Channel No.	Frequency(MHz)	Channel No.	Frequency(MHz)
2412~2462MHz	1	2412	7	2442
	2	2417	8	2447
	3	2422	9	2452
	4	2427	10	2457
	5	2432	11	2462
	6	2437	---	---

IEEE 802.11n HT40/ax HEW 40

Frequency Band	Channel No.	Frequency(MHz)	Channel No.	Frequency(MHz)
2422~2452MHz	---	---	7	2442
	---	---	8	2447
	3	2422	9	2452
	4	2427	10	---
	5	2432	11	---
	6	2437	---	---

2. TEST METHODOLOGY

All measurements contained in this report were conducted with ANSI C63.10-2013, American National Standard of Procedures for Compliance Testing of Unlicensed Wireless Devices.

The radiated testing was performed at an antenna-to-EUT distance of 3 meters. All radiated and conducted emissions measurement was performed at Shenzhen LCS Compliance Testing Laboratory Ltd.

2.1. EUT Configuration

The EUT configuration for testing is installed on RF field strength measurement to meet the Commissions requirement and operating in a manner that intends to maximize its emission characteristics in a continuous normal application.

2.2. EUT Exercise

The EUT was operated in the engineering mode to fix the TX frequency that was for the purpose of the measurements.

According to FCC's request, Test Procedure KDB558074 D01 15.247 Meas Guidance v05r02 is required to be used for this kind of FCC 15.247 digital modulation device.

According to its specifications, the EUT must comply with the requirements of the Section 15.203, 15.205, 15.207, 15.209 and 15.247 under the FCC Rules Part 15 Subpart C.

2.3. General Test Procedures

2.3.1 Conducted Emissions

The EUT is directly placed on the ground. According to the requirements in Section 6.2.1 of ANSI C63.10-2013 Conducted emissions from the EUT measured in the frequency range between 0.15 MHz and 30MHz using Quasi-peak and average detector modes.

2.3.2 Radiated Emissions

The EUT is placed on a turntable, which is directly placed on the ground. The turntable shall rotate 360 degrees to determine the position of maximum emission level. EUT is set 3m away from the receiving antenna, which varied from 1m to 4m to find out the highest emission. And also, each emission was to be maximized by changing the polarization of receiving antenna both horizontal and vertical. In order to find out the maximum emissions, exploratory radiated emission measurements were made according to the requirements in Section 6.3 of ANSI C63.10-2013.

2.4. Test Sample

The application provides 2 samples to meet requirement;

Sample Number	Description
Sample 1(A2503251021-1)	Engineer sample – continuous transmit
Sample 2(A2503251021-2)	Normal sample – Intermittent transmit

3. SYSTEM TEST CONFIGURATION

3.1. Justification

The system was configured for testing in a continuous transmits condition.

3.2. EUT Exercise Software

The system was configured for testing in a continuous transmits condition and change test channels by software provided by application.

3.3. Special Accessories

N/A.

3.4. Block Diagram/Schematics

Please refer to the related document

3.5. Equipment Modifications

Shenzhen LCS Compliance Testing Laboratory Ltd. has not done any modification on the EUT.

3.6. Test Setup

Please refer to the test setup photo.

4. SUMMARY OF TEST RESULTS

Applied Standard: FCC Part 15 Subpart C				
FCC Rules	Description of Test	Test Sample	Result	Remark
§15.247(a)(2)	6dB Bandwidth	Sample 1	Compliant	Appendix A.1
§15.209(a)	Radiated Spurious Emissions	Sample 1 Sample 2	Compliant	Note 1
§15.247(b)	Maximum Peak Conducted Output Power	Sample 1	Compliant	Appendix A.2
§15.247(e)	Power Spectral Density	Sample 1	Compliant	Appendix A.3
§15.247(d)	Band Edge Measurements and Conducted Spurious Emissions	Sample 1	Compliant	Appendix A.4 Appendix A.5
/	On Time and Duty Cycle	Sample 1	/	Only reported; Appendix A.6
§15.205	Emissions in Restricted Band	Sample 1	Compliant	Appendix A.7
§15.207(a)	Conducted Emissions	Sample 2	Compliant	Note 1
§15.203	Antenna Requirements	Sample 1	Compliant	Note 1
§15.247(i)§2.1091	RF Exposure	N/A	Compliant	Note 2

Remark:
1. Note 1 – Test results inside test report;
2. Note 2 – Test results in other test report (RF Exposure Evaluation);

5. TEST RESULT

5.1. 6 dB Spectrum Bandwidth Measurement

5.1.1. Standard Applicable

According to §15.247(a) (2): For digital modulation systems, the minimum 6 dB bandwidth shall be at least 500 kHz.

5.1.2. Measuring Instruments and Setting

Please refer to equipment's list in this report. The following table is the setting of the Spectrum Analyzer.

Spectrum Parameter	Setting
Attenuation	Auto
Span Frequency	> RBW
Detector	Peak
Trace	Max Hold
Sweep Time	Auto Sweep

5.1.3. Test Procedures

5.1.3.1. The transmitter output (antenna port) was connected to the spectrum analyzer in peak hold mode.

5.1.3.2. Set RBW/VBW = 100 KHz/300KHz (for 6dB bandwidth measurement)

Set RBW = 1%~5% OBW; VBW≥3*RBW (for occupied bandwidth measurement).

5.1.3.3. Measured the 6dB bandwidth and 99% occupied bandwidth by related function of the spectrum analyzer.

5.1.4. Test Setup Layout

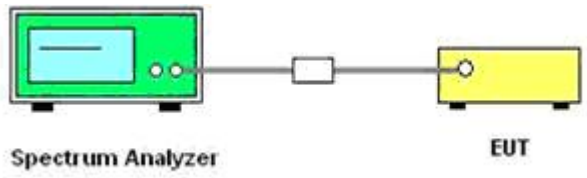

5.1.5. EUT Operation during Test

The EUT was programmed to be in continuously transmitting mode.

5.1.6. Test Result of 6dB Spectrum Bandwidth

PASS

Please refer to Appendix A.1
Remark:
1). Measured 6dB bandwidth at difference data rate for each mode and recorded worst case for each mode.
2). Test results including cable loss;
3). Worst case data at 1Mbps at IEEE 802.11b; 6Mbps at IEEE 802.11g; 6.5Mbps at IEEE 802.11n HT20; 13.5Mbps at IEEE 802.11n HT40; 6.5Mbps at IEEE 802.11ax HEW20; 13.5Mbps at IEEE 802.11ax HEW40;

5.2. Radiated Emissions Measurement

5.2.1. Standard Applicable

15.205 (a) Except as shown in paragraph (d) of this section, only spurious emissions are permitted in any of the frequency bands listed below:

MHz	MHz	MHz	GHz
0.090-0.110	16.42-16.423	399.9-410	4.5-5.15
\1\ 0.495-0.505	16.69475-16.69525	608-614	5.35-5.46
2.1735-2.1905	16.80425-16.80475	960-1240	7.25-7.75
4.125-4.128	25.5-25.67	1300-1427	8.025-8.5
4.17725-4.17775	37.5-38.25	1435-1626.5	9.0-9.2
4.20725-4.20775	73-74.6	1645.5-1646.5	9.3-9.5
6.215-6.218	74.8-75.2	1660-1710	10.6-12.7
6.26775-6.26825	108-121.94	1718.8-1722.2	13.25-13.4
6.31175-6.31225	123-138	2200-2300	14.47-14.5
8.291-8.294	149.9-150.05	2310-2390	15.35-16.2
8.362-8.366	156.52475-156.52525	2483.5-2500	17.7-21.4
8.37625-8.38675	156.7-156.9	2690-2900	22.01-23.12
8.41425-8.41475	162.0125-167.17	3260-3267	23.6-24.0
12.29-12.293.	167.72-173.2	3332-3339	31.2-31.8
12.51975-12.52025	240-285	3345.8-3358	36.43-36.5
12.57675-12.57725	322-335.4	3600-4400	(\2\)
13.36-13.41			

\1\ Until February 1, 1999, this restricted band shall be 0.490-0.510 MHz.

\2\ Above 38.6

According to §15.247 (d): 20dBc in any 100 kHz bandwidth outside the operating frequency band. In case the emission fall within the restricted band specified on 15.205(a), then the 15.209(a) limit in the table below has to be followed.

Frequencies (MHz)	Field Strength (microvolts/meter)	Measurement Distance (meters)
0.009~0.490	2400/F(KHz)	300
0.490~1.705	24000/F(KHz)	30
1.705~30.0	30	30
30~88	100	3
88~216	150	3
216~960	200	3
Above 960	500	3

5.2.2. Measuring Instruments and Setting

Please refer to equipment list in this report. The following table is the setting of spectrum analyzer and receiver.

Spectrum Parameter	Setting
Attenuation	Auto
Start Frequency	1000 MHz
Stop Frequency	10th carrier harmonic
RB / VB (Emission in restricted band)	1MHz / 1MHz for Peak, 1 MHz / 1/B kHz for Average
RB / VB (Emission in non-restricted band)	1MHz / 1MHz for Peak, 1 MHz / 1/B kHz for Average

Receiver Parameter	Setting
Attenuation	Auto
Start ~ Stop Frequency	9kHz~150kHz / RB/VB 200Hz/1KHz for QP/AVG
Start ~ Stop Frequency	150kHz~30MHz / RB/VB 9kHz/30KHz for QP/AVG
Start ~ Stop Frequency	30MHz~1000MHz / RB/VB 120kHz/1MHz for QP

5.2.3. Test Procedures

1) Sequence of testing 9 kHz to 30 MHz

Setup:

--- The equipment was set up to simulate a typical usage like described in the user manual or described by manufacturer.

--- If the EUT is a tabletop system, a rotatable table with 0.8 m height is used.

--- If the EUT is a floor standing device, it is placed on the ground.

--- Auxiliary equipment and cables were positioned to simulate normal operation conditions.

--- The AC power port of the EUT (if available) is connected to a power outlet below the turntable.

--- The measurement distance is 3 meter.

--- The EUT was set into operation.

Premeasurement:

--- The turntable rotates from 0° to 315° using 45° steps.

--- The antenna height is 1.0 meter.

--- At each turntable position the analyzer sweeps with peak detection to find the maximum of all emissions

Final measurement:

--- Identified emissions during the premeasurement the software maximizes by rotating the turntable position (0° to 360°) and by rotating the elevation axes (0° to 360°).

--- The final measurement will be done in the position (turntable and elevation) causing the highest emissions with QPK detector.

--- The final levels, frequency, measuring time, bandwidth, turntable position, correction factor, margin to the limit and limit will be recorded. Also a plot with the graph of the premeasurement and the limit will be stored.

2) Sequence of testing 30 MHz to 1 GHz

Setup:

--- The equipment was set up to simulate a typical usage like described in the user manual or described by manufacturer.

--- If the EUT is a tabletop system, a table with 0.8 m height is used, which is placed on the ground plane.

--- If the EUT is a floor standing device, it is placed on the ground plane with insulation between both.

--- Auxiliary equipment and cables were positioned to simulate normal operation conditions

--- The AC power port of the EUT (if available) is connected to a power outlet below the turntable.

--- The measurement distance is 3 meter.

--- The EUT was set into operation.

Premeasurement:

--- The turntable rotates from 0° to 315° using 45° steps.

--- The antenna is polarized vertical and horizontal.

--- The antenna height changes from 1 to 3 meter.

--- At each turntable position, antenna polarization and height the analyzer sweeps three times in peak to find the maximum of all emissions.

Final measurement:

--- The final measurement will be performed with minimum the six highest peaks.

--- According to the maximum antenna and turntable positions of premeasurement the software maximize the peaks by changing turntable position (± 45°) and antenna movement between 1 and 4 meter.

--- The final measurement will be done with QP detector with an EMI receiver.

--- The final levels, frequency, measuring time, bandwidth, antenna height, antenna polarization, turntable angle, correction factor, margin to the limit and limit will be recorded. Also a plot with the graph of the premeasurement with marked maximum final measurements and the limit will be stored.

3) Sequence of testing 1 GHz to 18 GHz

Setup:

--- The equipment was set up to simulate a typical usage like described in the user manual or described by manufacturer.

--- If the EUT is a tabletop system, a rotatable table with 1.5 m height is used.

--- If the EUT is a floor standing device, it is placed on the ground plane with insulation between both.

--- Auxiliary equipment and cables were positioned to simulate normal operation conditions

--- The AC power port of the EUT (if available) is connected to a power outlet below the turntable.

--- The measurement distance is 3 meter.

--- The EUT was set into operation.

Premeasurement:

--- The turntable rotates from 0° to 315° using 45° steps.

--- The antenna is polarized vertical and horizontal.

--- The antenna height scan range is 1 meter to 2.5 meter.

--- At each turntable position and antenna polarization the analyzer sweeps with peak detection to find the maximum of all emissions.

Final measurement:

--- The final measurement will be performed with minimum the six highest peaks.

--- According to the maximum antenna and turntable positions of premeasurement the software maximize the peaks by changing turntable position (± 45°) and antenna movement between 1 and 4 meter. This procedure is repeated for both antenna polarizations.

--- The final measurement will be done in the position (turntable, EUT-table and antenna polarization) causing the highest emissions with Peak and Average detector.

--- The final levels, frequency, measuring time, bandwidth, turntable position, EUT-table position, antenna polarization, correction factor, margin to the limit and limit will be recorded. Also a plot with the graph of the premeasurement with marked maximum final measurements and the limit will be stored.

4) Sequence of testing above 18 GHz

Setup:

--- The equipment was set up to simulate a typical usage like described in the user manual or described by manufacturer.

--- If the EUT is a tabletop system, a rotatable table with 1.5 m height is used.

--- If the EUT is a floor standing device, it is placed on the ground plane with insulation between both.

--- Auxiliary equipment and cables were positioned to simulate normal operation conditions

--- The AC power port of the EUT (if available) is connected to a power outlet below the turntable.

--- The measurement distance is 1 meter.

--- The EUT was set into operation.

Premeasurement:

--- The antenna is moved spherical over the EUT in different polarizations of the antenna.

Final measurement:

--- The final measurement will be performed at the position and antenna orientation for all detected emissions that were found during the premeasurements with Peak and Average detector.

--- The final levels, frequency, measuring time, bandwidth, correction factor, margin to the limit and limit will be recorded. Also a plot with the graph of the premeasurement and the limit will be stored.

5.2.4. Test Setup Layout

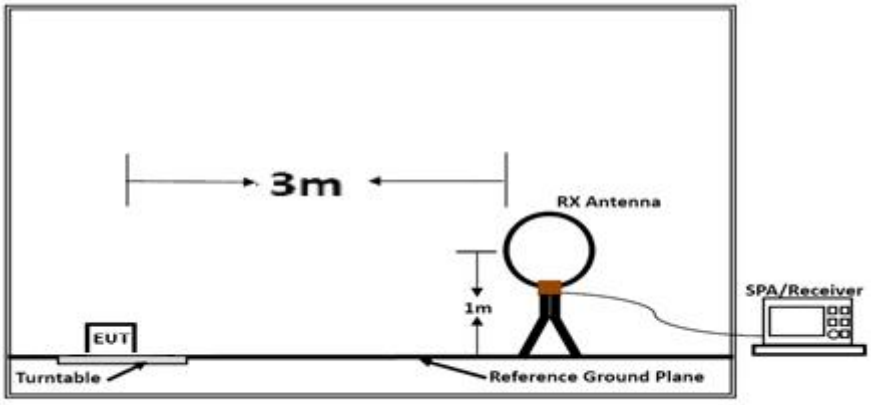

Below 30MHz

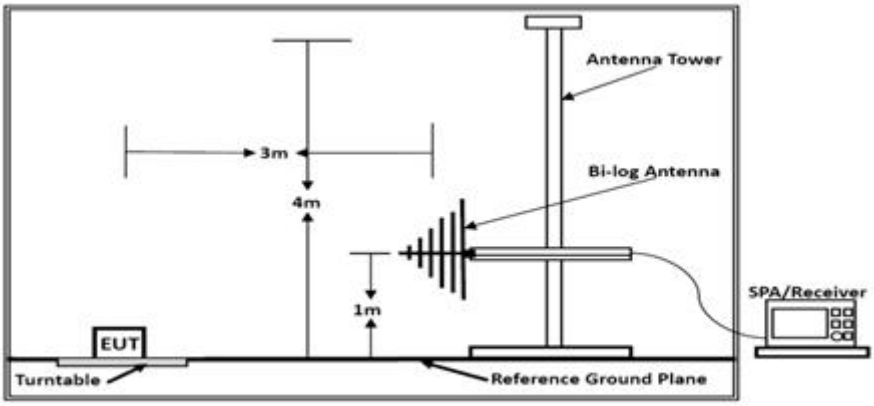

Below 1GHz

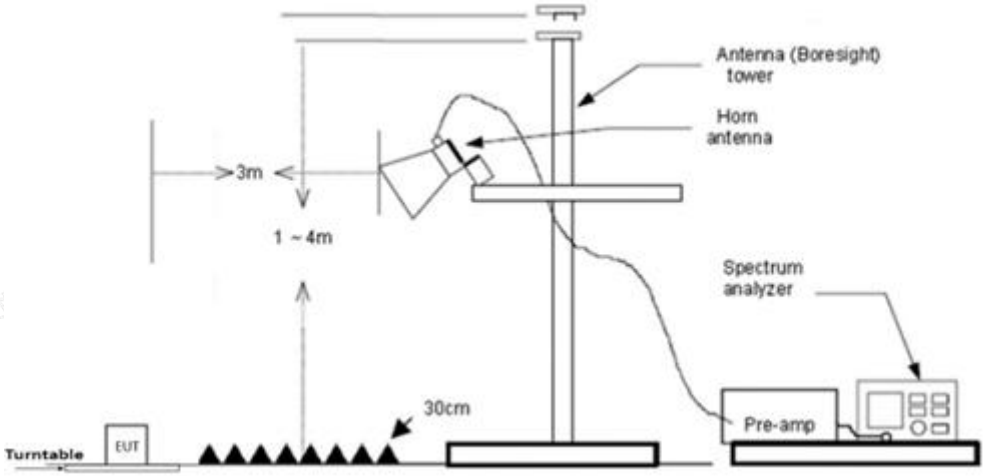

Above 18 GHz shall be extrapolated to the specified distance using an extrapolation factor of 20 dB/decade form 3m to 1m.

5.2.5. EUT Operation during Test

The EUT was programmed to be in continuously transmitting mode.

5.2.6. Field Strength Calculation

The field strength is calculated by adding the Antenna Factor and Cable Factor and subtracting the Amplifier Gain and Duty Cycle Correction Factor (if any) from the measured reading. The basic equation with a sample calculation is as follows:

FS (dBuV/m) = RA (dBuV) + AF (dB/m) + CL (dB) – AG (dB)

Where FS = Field Strength	CL = Cable Attenuation Factor (Cable Loss)
RA = Reading Amplitude	AG = Amplifier Gain
AF = Antenna Factor	

5.2.7. Results of Radiated Emissions (9 KHz~30MHz)

Temperature	26.4℃	Humidity	54.2%
Test Engineer	Can Kun	Configurations	IEEE 802.11b/g/n/ax

Freq. (MHz)	Level (dBuV)	Over Limit (dB)	Over Limit (dB)	Remark
-	-	-	-	See Note

Note:
The amplitude of spurious emissions which are attenuated by more than 20 dB below the permissible value has no need to be reported.

Distance extrapolation factor = 40 log (specific distance / test distance) (dB);
Limit line = specific limits (dBuV) + distance extrapolation factor.

5.2.8. Results of Radiated Emissions (30MHz~1GHz)

Temperature	26.4℃	Humidity	54.2%
Test Engineer	Can Kun	Configurations	IEEE 802.11b/g/n/ax

PASS.

The test data please refer to following page.

Horizontal

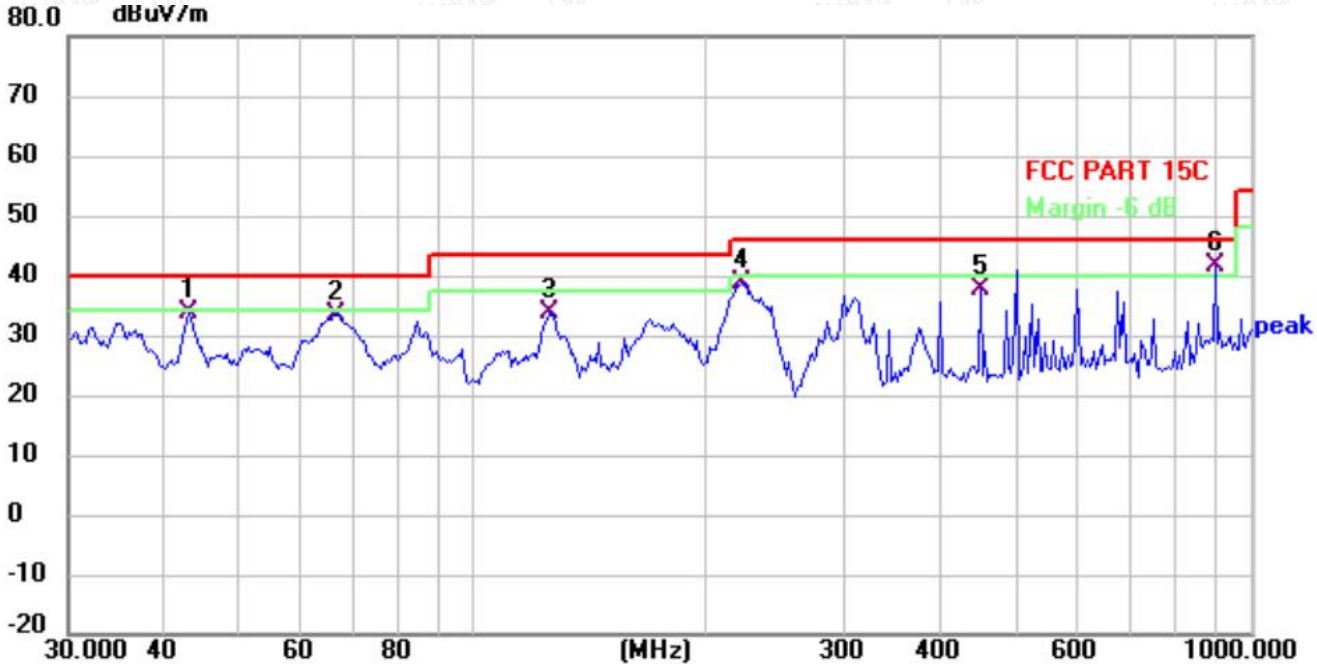

No.	Frequency (MHz)	Reading (dBuV)	Factor (dB/m)	Level (dBuV/m)	Limit (dBuV/m)	Margin (dB)	Detector
1	42.931	44.73	-10.99	33.74	40.00	-6.26	QP
2	66.371	46.51	-13.23	33.28	40.00	-6.72	QP
3	124.925	48.22	-14.48	33.74	43.50	-9.76	QP
4	220.724	51.09	-12.22	38.87	46.00	-7.13	QP
5	448.836	45.27	-7.45	37.82	46.00	-8.18	QP
6 *	899.958	43.09	-1.36	41.73	46.00	-4.27	QP

Vertical

No.	Frequency (MHz)	Reading (dBuV)	Factor (dB/m)	Level (dBuV/m)	Limit (dBuV/m)	Margin (dB)	Detector
1	43.233	40.29	-10.93	29.36	40.00	-10.64	QP
2	124.050	47.83	-14.65	33.18	43.50	-10.32	QP
3	223.848	51.71	-12.16	39.55	46.00	-6.45	QP
4	373.886	44.05	-8.07	35.98	46.00	-10.02	QP
5	598.707	44.22	-4.73	39.49	46.00	-6.51	QP
6 *	899.958	41.66	-1.36	40.30	46.00	-5.70	QP

Note:

Pre-scan all modes and recorded the worst case results in this report IEEE 802.11b mode (Low Channel).

Emission level (dBuV/m) = 20 log Emission level (uV/m).

Measured = Reading +CabLos+Antfac, Margin = Measured-Limit.

5.2.9. Results for Radiated Emissions (1 GHz~26.5 GHz)

Note: All the modes have been tested and recorded worst mode in the report.

IEEE 802.11b

Channel 1 / 2412 MHz

Freq. MHz	Reading dBuV	Ant. Fac. dB/m	Pre. Fac. dB	Cab. Loss dB	Measured dBuV/m	Limit dBuV/m	Margin dB	Remark	Pol.
4824.00	54.93	33.06	35.04	3.94	56.89	74.00	-17.11	Peak	Horizontal
4824.00	45.55	33.06	35.04	3.94	47.51	54.00	-6.49	Average	Horizontal
4824.00	60.53	33.06	35.04	3.94	62.49	74.00	-11.51	Peak	Vertical
4824.00	42.72	33.06	35.04	3.94	44.68	54.00	-9.32	Average	Vertical

Channel 6 / 2437 MHz

Freq. MHz	Reading dBuV	Ant. Fac. dB/m	Pre. Fac. dB	Cab. Loss dB	Measured dBuV/m	Limit dBuV/m	Margin dB	Remark	Pol.
4874.00	56.04	33.16	35.15	3.96	58.01	74.00	-15.99	Peak	Horizontal
4874.00	44.43	33.16	35.15	3.96	46.40	54.00	-7.60	Average	Horizontal
4874.00	58.08	33.16	35.15	3.96	60.05	74.00	-13.95	Peak	Vertical
4874.00	41.49	33.16	35.15	3.96	43.46	54.00	-10.54	Average	Vertical

Channel 11 / 2462 MHz

Freq. MHz	Reading dBuV	Ant. Fac. dB/m	Pre. Fac. dB	Cab. Loss dB	Measured dBuV/m	Limit dBuV/m	Margin dB	Remark	Pol.
4924.00	53.65	33.26	35.14	3.98	55.75	74.00	-18.25	Peak	Horizontal
4924.00	45.61	33.26	35.14	3.98	47.71	54.00	-6.29	Average	Horizontal
4924.00	60.30	33.26	35.14	3.98	62.40	74.00	-11.60	Peak	Vertical
4924.00	44.50	33.26	35.14	3.98	46.60	54.00	-7.40	Average	Vertical

IEEE 802.11g

Channel 1 / 2412 MHz

Freq. MHz	Reading dBuV	Ant. Fac. dB/m	Pre. Fac. dB	Cab. Loss dB	Measured dBuV/m	Limit dBuV/m	Margin dB	Remark	Pol.
4824.00	60.06	33.06	35.04	3.94	62.02	74.00	-11.98	Peak	Horizontal
4824.00	40.29	33.06	35.04	3.94	42.25	54.00	-11.75	Average	Horizontal
4824.00	59.81	33.06	35.04	3.94	61.77	74.00	-12.23	Peak	Vertical
4824.00	45.59	33.06	35.04	3.94	47.55	54.00	-6.45	Average	Vertical

Channel 6 / 2437 MHz

Freq. MHz	Reading dBuV	Ant. Fac. dB/m	Pre. Fac. dB	Cab. Loss dB	Measured dBuV/m	Limit dBuV/m	Margin dB	Remark	Pol.
4874.00	54.28	33.16	35.15	3.96	56.25	74.00	-17.75	Peak	Horizontal
4874.00	41.51	33.16	35.15	3.96	43.48	54.00	-10.52	Average	Horizontal
4874.00	58.84	33.16	35.15	3.96	60.81	74.00	-13.19	Peak	Vertical
4874.00	44.27	33.16	35.15	3.96	46.24	54.00	-7.76	Average	Vertical

Channel 11 / 2462 MHz

Freq. MHz	Reading dBuV	Ant. Fac. dB/m	Pre. Fac. dB	Cab. Loss dB	Measured dBuV/m	Limit dBuV/m	Margin dB	Remark	Pol.
4924.00	54.04	33.26	35.14	3.98	56.14	74.00	-17.86	Peak	Horizontal
4924.00	40.48	33.26	35.14	3.98	42.58	54.00	-11.42	Average	Horizontal
4924.00	58.47	33.26	35.14	3.98	60.57	74.00	-13.43	Peak	Vertical
4924.00	41.94	33.26	35.14	3.98	44.04	54.00	-9.96	Average	Vertical

IEEE 802.11n HT20

Channel 1 / 2412 MHz

Freq. MHz	Reading dBuV	Ant. Fac. dB/m	Pre. Fac. dB	Cab. Loss dB	Measured dBuV/m	Limit dBuV/m	Margin dB	Remark	Pol.
4824.00	59.21	33.06	35.04	3.94	61.17	74.00	-12.83	Peak	Horizontal
4824.00	40.57	33.06	35.04	3.94	42.53	54.00	-11.47	Average	Horizontal
4824.00	60.90	33.06	35.04	3.94	62.86	74.00	-11.14	Peak	Vertical
4824.00	40.33	33.06	35.04	3.94	42.29	54.00	-11.71	Average	Vertical

Channel 6 / 2437 MHz

Freq. MHz	Reading dBuV	Ant. Fac. dB/m	Pre. Fac. dB	Cab. Loss dB	Measured dBuV/m	Limit dBuV/m	Margin dB	Remark	Pol.
4874.00	60.93	33.16	35.15	3.96	62.90	74.00	-11.10	Peak	Horizontal
4874.00	44.58	33.16	35.15	3.96	46.55	54.00	-7.45	Average	Horizontal
4874.00	53.53	33.16	35.15	3.96	55.50	74.00	-18.50	Peak	Vertical
4874.00	43.79	33.16	35.15	3.96	45.76	54.00	-8.24	Average	Vertical

Channel 11 / 2462 MHz

Freq. MHz	Reading dBuV	Ant. Fac. dB/m	Pre. Fac. dB	Cab. Loss dB	Measured dBuV/m	Limit dBuV/m	Margin dB	Remark	Pol.
4924.00	60.21	33.26	35.14	3.98	62.31	74.00	-11.69	Peak	Horizontal
4924.00	45.14	33.26	35.14	3.98	47.24	54.00	-6.76	Average	Horizontal
4924.00	55.42	33.26	35.14	3.98	57.52	74.00	-16.48	Peak	Vertical
4924.00	44.07	33.26	35.14	3.98	46.17	54.00	-7.83	Average	Vertical

IEEE 802.11n HT40

Channel 3 / 2422 MHz

Freq. MHz	Reading dBuV	Ant. Fac. dB/m	Pre. Fac. dB	Cab. Loss dB	Measured dBuV/m	Limit dBuV/m	Margin dB	Remark	Pol.
4844.00	53.20	33.06	35.04	3.94	55.16	74.00	-18.84	Peak	Horizontal
4844.00	44.54	33.06	35.04	3.94	46.50	54.00	-7.50	Average	Horizontal
4844.00	55.25	33.06	35.04	3.94	57.21	74.00	-16.79	Peak	Vertical
4844.00	42.03	33.06	35.04	3.94	43.99	54.00	-10.01	Average	Vertical

Channel 6 / 2437 MHz

Freq. MHz	Reading dBuV	Ant. Fac. dB/m	Pre. Fac. dB	Cab. Loss dB	Measured dBuV/m	Limit dBuV/m	Margin dB	Remark	Pol.
4874.00	54.76	33.16	35.15	3.96	56.73	74.00	-17.27	Peak	Horizontal
4874.00	43.15	33.16	35.15	3.96	45.12	54.00	-8.88	Average	Horizontal
4874.00	60.50	33.16	35.15	3.96	62.47	74.00	-11.53	Peak	Vertical
4874.00	42.51	33.16	35.15	3.96	44.48	54.00	-9.52	Average	Vertical

Channel 9 / 2452 MHz

Freq. MHz	Reading dBuV	Ant. Fac. dB/m	Pre. Fac. dB	Cab. Loss dB	Measured dBuV/m	Limit dBuV/m	Margin dB	Remark	Pol.
4904.00	54.58	33.26	35.14	3.98	56.68	74.00	-17.32	Peak	Horizontal
4904.00	43.75	33.26	35.14	3.98	45.85	54.00	-8.15	Average	Horizontal
4904.00	58.07	33.26	35.14	3.98	60.17	74.00	-13.83	Peak	Vertical
4904.00	45.36	33.26	35.14	3.98	47.46	54.00	-6.54	Average	Vertical

IEEE 802.11ax HEW20

Channel 1 / 2412 MHz

Freq. MHz	Reading dBuV	Ant. Fac. dB/m	Pre. Fac. dB	Cab. Loss dB	Measured dBuV/m	Limit dBuV/m	Margin dB	Remark	Pol.
4824.00	58.90	33.06	35.04	3.94	60.86	74.00	-13.14	Peak	Horizontal
4824.00	43.90	33.06	35.04	3.94	45.86	54.00	-8.14	Average	Horizontal
4824.00	56.40	33.06	35.04	3.94	58.36	74.00	-15.64	Peak	Vertical
4824.00	40.55	33.06	35.04	3.94	42.51	54.00	-11.49	Average	Vertical

Channel 6 / 2437 MHz

Freq. MHz	Reading dBuV	Ant. Fac. dB/m	Pre. Fac. dB	Cab. Loss dB	Measured dBuV/m	Limit dBuV/m	Margin dB	Remark	Pol.
4874.00	58.93	33.16	35.15	3.96	60.90	74.00	-13.10	Peak	Horizontal
4874.00	41.56	33.16	35.15	3.96	43.53	54.00	-10.47	Average	Horizontal
4874.00	60.04	33.16	35.15	3.96	62.01	74.00	-11.99	Peak	Vertical
4874.00	42.43	33.16	35.15	3.96	44.40	54.00	-9.60	Average	Vertical

Channel 11 / 2462 MHz

Freq. MHz	Reading dBuV	Ant. Fac. dB/m	Pre. Fac. dB	Cab. Loss dB	Measured dBuV/m	Limit dBuV/m	Margin dB	Remark	Pol.
4924.00	59.15	33.26	35.14	3.98	61.25	74.00	-12.75	Peak	Horizontal
4924.00	40.97	33.26	35.14	3.98	43.07	54.00	-10.93	Average	Horizontal
4924.00	53.71	33.26	35.14	3.98	55.81	74.00	-18.19	Peak	Vertical
4924.00	42.84	33.26	35.14	3.98	44.94	54.00	-9.06	Average	Vertical

IEEE 802.11ax HEW40

Channel 3 / 2422 MHz

Freq. MHz	Reading dBuV	Ant. Fac. dB/m	Pre. Fac. dB	Cab. Loss dB	Measured dBuV/m	Limit dBuV/m	Margin dB	Remark	Pol.
4844.00	58.27	33.06	35.04	3.94	60.23	74.00	-13.77	Peak	Horizontal
4844.00	40.20	33.06	35.04	3.94	42.16	54.00	-11.84	Average	Horizontal
4844.00	58.63	33.06	35.04	3.94	60.59	74.00	-13.41	Peak	Vertical
4844.00	45.69	33.06	35.04	3.94	47.65	54.00	-6.35	Average	Vertical

Channel 6 / 2437 MHz

Freq. MHz	Reading dBuV	Ant. Fac. dB/m	Pre. Fac. dB	Cab. Loss dB	Measured dBuV/m	Limit dBuV/m	Margin dB	Remark	Pol.
4874.00	53.89	33.16	35.15	3.96	55.86	74.00	-18.14	Peak	Horizontal
4874.00	41.97	33.16	35.15	3.96	43.94	54.00	-10.06	Average	Horizontal
4874.00	60.10	33.16	35.15	3.96	62.07	74.00	-11.93	Peak	Vertical
4874.00	44.88	33.16	35.15	3.96	46.85	54.00	-7.15	Average	Vertical

Channel 9 / 2452 MHz

Freq. MHz	Reading dBuV	Ant. Fac. dB/m	Pre. Fac. dB	Cab. Loss dB	Measured dBuV/m	Limit dBuV/m	Margin dB	Remark	Pol.
4904.00	54.75	33.26	35.14	3.98	56.85	74.00	-17.15	Peak	Horizontal
4904.00	42.07	33.26	35.14	3.98	44.17	54.00	-9.83	Average	Horizontal
4904.00	59.34	33.26	35.14	3.98	61.44	74.00	-12.56	Peak	Vertical
4904.00	42.64	33.26	35.14	3.98	44.74	54.00	-9.26	Average	Vertical

Notes:

1). Measuring frequencies from 9 KHz - 10th harmonic or 26.5GHz (which is less), at least have 20dB margin between lowest internal used/generated frequency to 30MHz.

2). Radiated emissions measured in frequency range from 9 KHz~10th harmonic or 26.5GHz (which is less) were made with an instrument using Peak detector mode.

3). Data of measurement within this frequency range shown "---" in the table above means the reading of emissions are attenuated more than 20dB below the permissible limits or the field strength is too small to be measured.

4). Worst case data at 1Mbps at IEEE 802.11b; 6Mbps at IEEE 802.11g; 6.5Mbps at IEEE 802.11n HT20; 13.5Mbps at IEEE 802.11n HT40; 6.5Mbps at IEEE 802.11ax HEW20; 13.5Mbps at IEEE 802.11ax HEW40;

5). Measured Level = Reading Level + Factor, Margin = Measured Level – Limit, Factor = Antenna Factor + Cable Loss - Preamp Factor.

5.3. Maximum Peak Conducted Output Power Measurement

5.3.1. Standard Applicable

According to §15.247(b): For systems using digital modulation in the 2400-2483.5 MHz and 5725-5850 MHz band, the limit for maximum peak conducted output power is 30dBm. The limited has to be reduced by the amount in dB that the gain of the antenna exceeds 6dBi. In case of point-to-point operation, the limit has to be reduced by 1dB for every 3dB that the directional gain of the antenna exceeds 6dBi.

Systems operating in the 5725-5850 MHz band that are used exclusively for fixed, point-to-point operations may employ transmitting antennas with directional gain greater than 6dBi without any corresponding reduction in transmitter peak output power.

5.3.2. Measuring Instruments and Setting

Please refer to equipment's list in this report. The following table is the setting of the power meter.

5.3.3. Test Procedures

According to C63.10-2013 clause 11.9.1.3 Maximum peak conducted output power, 9.1.3 the maximum peak conducted output power may be measured using a broadband peak RF power meter. The power meter shall have a video bandwidth that is greater than or equal to the DTS bandwidth and shall utilize a fast-responding diode detector.

5.3.4. Test Setup Layout

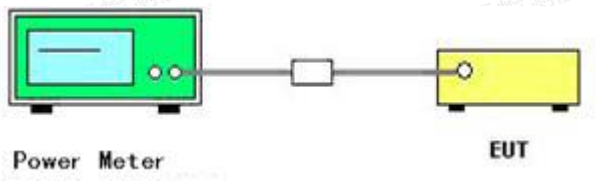

5.3.5. EUT Operation during Test

1) The EUT is configured to transmit continuously.
2) At all times when the EUT is transmitting, it shall be transmitting at its maximum power control level.
3) The integration period of the power meter exceeds the repetition period of the transmitted signal by at least a factor of five.

5.3.6. Test Result of Maximum Peak Conducted Output Power

PASS

Please refer to Appendix A.2

Remark:

1). Measured output power at difference data rate for each mode and recorded worst case for each mode.

2). Test results including cable loss;

3). Worst case data at 1Mbps at IEEE 802.11b; 6Mbps at IEEE 802.11g; 6.5Mbps at IEEE 802.11n HT20; 13.5Mbps at IEEE 802.11n HT40; 6.5Mbps at IEEE 802.11ax HEW20; 13.5Mbps at IEEE 802.11ax HEW40;

4). Peak power only for report.

5.4. Power Spectral Density Measurement

5.4.1. Standard Applicable

According to §15.247(e): For digitally modulated systems, the power spectral density conducted from the intentional radiator to the antenna shall not be greater than 8dBm in any 3 kHz band during any time interval of continuous transmission.

5.4.2. Measuring Instruments and Setting

Please refer to equipment's list in this report. The following table is the setting of Spectrum Analyzer.

5.4.3. Test Procedures

1. Use this procedure when the maximum peak conducted output power in the fundamental emission is used to demonstrate compliance.
2. The power was monitored at the coupler port with a Spectrum Analyzer. The power level was set to the maximum level.
3. Set the RBW = 3 kHz.
4. Set the VBW ≥ 3*RBW
5. Set the span to 1.5 times the DTS channel bandwidth.
6. Detector = peak.
7. Sweep time = auto couple.
8. Trace mode = max hold.
9. Allow trace to fully stabilize.
10. Use the peak marker function to determine the maximum power level.
11. If measured value exceeds limit, reduce RBW (no less than 3 kHz) and repeat.
12. The resulting peak PSD level shall not be greater than 8dBm in any 3 kHz.

5.4.4. Test Setup Layout

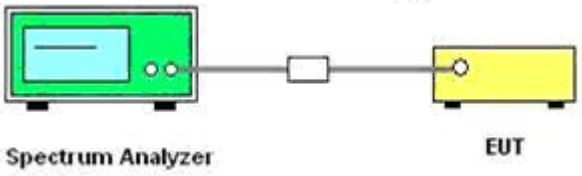

5.4.5. EUT Operation during Test

The EUT was programmed to be in continuously transmitting mode.

5.4.6. Test Result of Power Spectral Density

PASS

Please refer to Appendix A.3

Remark:

1). Measured power spectrum density at difference data rate for each mode and recorded worst case for each mode.

2). Test results including cable loss;

3). Worst case data at 1Mbps at IEEE 802.11b; 6Mbps at IEEE 802.11g; 6.5Mbps at IEEE 802.11n HT20; 13.5Mbps at IEEE 802.11n HT40; 6.5Mbps at IEEE 802.11ax HEW20; 13.5Mbps at IEEE 802.11ax HEW40;

5.5. Band Edge Measurements and Conducted Spurious Emissions Test

5.5.1. Standard Applicable

According to §15.247 (d): In any 100 kHz bandwidth outside the frequency band in which the spread spectrum or digitally modulated intentional radiator is operating, the radio frequency power that is produced by the intentional radiator shall be at least 20 dB below that in the 100 kHz bandwidth within the band that contains the highest level of the desired power, based on either an RF conducted or a radiated measurement. Attenuation below the general limits specified in Section 15.209(a) is not required. In addition, radiated emissions which fall in the restricted bands, as defined in Section 15.205(a), must also comply with the radiated emission limits specified in Section 15.209(a) (see Section 15.205(c)).

5.5.2. Measuring Instruments and Setting

Please refer to equipment list in this report. The following table is the setting of the spectrum analyzer.

Spectrum Parameter	Setting
Detector	Peak
Attenuation	Auto
RB / VB (Emission in restricted band)	100KHz/300KHz
RB / VB (Emission in non-restricted band)	100KHz/300KHz

5.5.3. Test Procedures

The transmitter output is connected to a spectrum analyzer. The resolution bandwidth is set to 100 KHz. The video bandwidth is set to 300 KHz

The spectrum from 30 MHz to 26.5 GHz is investigated with the transmitter set to the lowest, middle, and highest channels.

5.5.4. Test Setup Layout

This test setup layout is the same as that shown in section 5.4.4.

5.5.5. EUT Operation during Test

The EUT was programmed to be in continuously transmitting mode.

5.5.6. Test Results of Conducted Spurious Emissions

PASS

Please refer to Appendix A.4 for Band Edge Measurements;

Please refer to Appendix A.5 for Conducted Spurious Emissions.

Remark:
1). Measured RF conducted spurious emission at difference data rate for each mode and recorded worst case for each mode.
2). Test results including cable loss;
3). Worst case data at 1Mbps at IEEE 802.11b; 6Mbps at IEEE 802.11g; 6.5Mbps at IEEE 802.11n HT20; 13.5Mbps at IEEE 802.11n HT40; 6.5Mbps at IEEE 802.11ax HEW20; 13.5Mbps at IEEE 802.11ax HEW40;
4). "---"means that the fundamental frequency not for 15.209 limits requirement.
5). Not recorded emission from 9 KHz to 30 MHz as emission level at least 20dBc lower than emission limit.

5.6. On Time and Duty Cycle

5.6.1. Standard Applicable

None: for reporting purpose only.

5.6.2. Measuring Instruments and Setting

Please refer to equipment's list in this report. The following table is the setting of the spectrum analyzer.

5.6.3. Test Procedures

1. Set the centre frequency of the spectrum analyzer to the transmitting frequency;
2. Set the span=0MHz, RBW=8.0MHz, VBW=8.0MHz, Sweep time=Auto
3. Detector = peak;
4. Trace mode = Single hold.

5.6.4. Test Setup Layout

5.6.5. EUT Operation during Test

The EUT was programmed to be in continuously transmitting mode.

5.6.6. Test result

For reporting purpose only.

Please refer to Appendix A.6

5.7. Emissions in Restricted Band

5.7.1 Standard Applicable

In any 100 kHz bandwidth outside the frequency band in which the spread spectrum or digitally modulated intentional radiator is operating, the radio frequency power that is produced by the intentional radiator shall be at least 20dB below that in the 100 kHz bandwidth within the band that contains the highest level of the desired power, based on either an RF conducted or a radiated measurement, provided the transmitter demonstrates compliance with the peak conducted power limits. If the transmitter complies with the conducted power limits based on the use of RMS averaging over a time interval, as permitted under paragraph (b)(3) of this section, the attenuation required under this paragraph shall be 30 dB instead of 20dB. Attenuation below the general limits specified in §15.209(a) is not required. In addition, radiated emissions which fall in the restricted bands, as defined in §15.205(a), must also comply with the radiated emission limits specified in §15.209(a) (see §15.205(c)).

5.7.2. Test Setup Layout

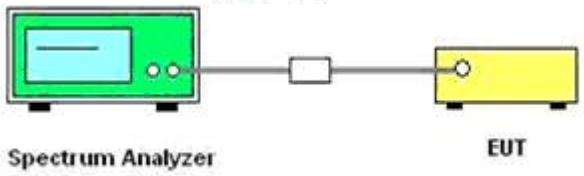

5.7.3. Measuring Instruments and Setting

Please refer to equipment list in this report. The following table is the setting of Spectrum Analyzer.

5.7.4. Test Procedures

According to KDB558074 D01 15.247 Meas Guidance v05r02 for Antenna-port conducted measurement. Antenna-port conducted measurements may also be used as an alternative to radiated measurements for demonstrating compliance in the restricted frequency bands. If conducted measurements are performed, then proper impedance matching must be ensured and an additional radiated test for cabinet/case spurious emissions is required.
1). Check the calibration of the measuring instrument using either an internal calibrator or a known signal from an external generator.
2). Remove the antenna from the EUT and then connect to a low loss RF cable from the antenna port to an EMI test receiver, then turn on the EUT and make it operate in transmitting mode. Then set it to Low Channel and High Channel within its operating range, and make sure the instrument is operated in its linear range.
3). Set both RBW and VBW of spectrum analyzer to 100 kHz with a convenient frequency span including 100kHz bandwidth from band edge, for Radiated emissions restricted band RBW=1MHz, VBW=3MHz for peak detector and RBW=1MHz, VBW=1/B for AV detector.
4). Measure the highest amplitude appearing on spectral display and set it as a reference level. Plot the graph with marking the highest point and edge frequency.
5). Repeat above procedures until all measured frequencies were complete.
6). Measure the conducted output power (in dBm) using the detector specified by the appropriate regulatory agency (see 12.2.2, 12.2.3, and 12.2.4 for guidance regarding measurement procedures for determining quasi-peak, peak, and average conducted output power, respectively).
7). Add the maximum transmit antenna gain (in dBi) to the measured output power level to determine the EIRP level (see 12.2.5 for guidance on determining the applicable antenna gain)
8). Add the appropriate maximum ground reflection factor to the EIRP level (6 dB for frequencies ≤ 30 MHz, 4.7 dB for frequencies between 30 MHz and 1000 MHz, inclusive and 0 dB for frequencies > 1000 MHz).
9). For devices with multiple antenna-ports, measure the power of each individual chain and sum the EIRP of all chains in linear terms (e.g., Watts, mW).
10). Convert the resultant EIRP level to an equivalent electric field strength using the following relationship:

$E = EIRP – 20\log D + 104.8 = EIRP + 95.26$

Where:
E = electric field strength in dBμV/m,
EIRP = equivalent isotropic radiated power in dBm
D = specified measurement distance in meters.
11). Since the out-of-band characteristics of the EUT transmit antenna will often be unknown, the use of a conservative antenna gain value is necessary. Thus, when determining the EIRP based on the measured conducted power, the upper bound on antenna gain for a device with a single RF output shall be selected as the maximum in-band gain of the antenna across all operating bands, or 2 dBi, whichever is greater. However, for devices that operate in multiple frequency bands while using the same transmit antenna, the highest gain of the antenna within the operating band nearest in frequency to the restricted band emission being measured may be used in lieu of the overall highest gain when the emission is at a frequency that is within 20 percent of the nearest band edge frequency, but in no case shall a value less than 2 dBi be used.
12). Compare the resultant electric field strength level to the applicable regulatory limit.
13). Perform radiated spurious emission test duress until all measured frequencies were complete.

5.7.5 Test Results

PASS

Please refer to Appendix A.7

Remark:

1). Measured Band edge measurement for radiated emission at difference data rate for each mode and recorded worst case for each mode.

2). Test results including cable loss;

3). Worst case data at 1Mbps at IEEE 802.11b; 6Mbps at IEEE 802.11g; 6.5Mbps at IEEE 802.11n HT20; 13.5Mbps at IEEE 802.11n HT40; 6.5Mbps at IEEE 802.11ax HEW20; 13.5Mbps at IEEE 802.11ax HEW40;

4). "---"means that the fundamental frequency not for 15.209 limits requirement.

5.8. AC Power line conducted emissions

5.8.1 Standard Applicable

According to §15.207 (a): For an intentional radiator which is designed to be connected to the public utility (AC) power line, the radio frequency voltage that is conducted back onto the AC power line on any frequency or frequencies within the band 150 kHz to 30 MHz shall not exceed 250 microvolts (The limit decreases linearly with the logarithm of the frequency in the range 0.15 MHz to 0.50 MHz). The limits at specific frequency range are listed as follows:

Frequency Range (MHz)	Limits (dBμV)	
	Quasi-peak	Average
0.15 to 0.50	66 to 56	56 to 46
0.50 to 5	56	46
5 to 30	60	50

* Decreasing linearly with the logarithm of the frequency

5.8.2 Block Diagram of Test Setup

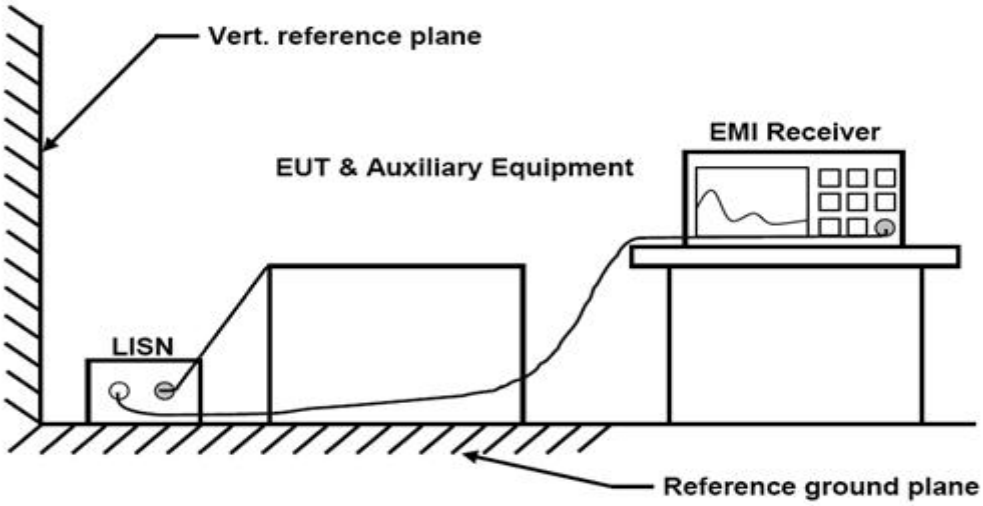

5.8.3 Disturbance Calculation

The AC mains conducted disturbance is calculated by adding the 10dB Pulse Limiter and Cable Factor and Duty Cycle Correction Factor (if any) from the measured reading. The basic equation with a sample calculation is as follows:

CD (dBuV) = RA (dBuV) + PL (dB) + CL (dB)

Where CD = Conducted Disturbance	CL = Cable Attenuation Factor (Cable Loss)
RA = Reading Amplitude	PL = 10 dB Pulse Limiter Factor

5.8.4 Test Results

Temperature	23.5℃	Humidity	53.6%
Test Engineer	Can Kun	Configurations	IEEE 802.11b/g/n/ax

PASS.

The test data please refer to following page.

AC Conducted Emission of Adapter@ AC 120V/60Hz mode (worst case)

Line

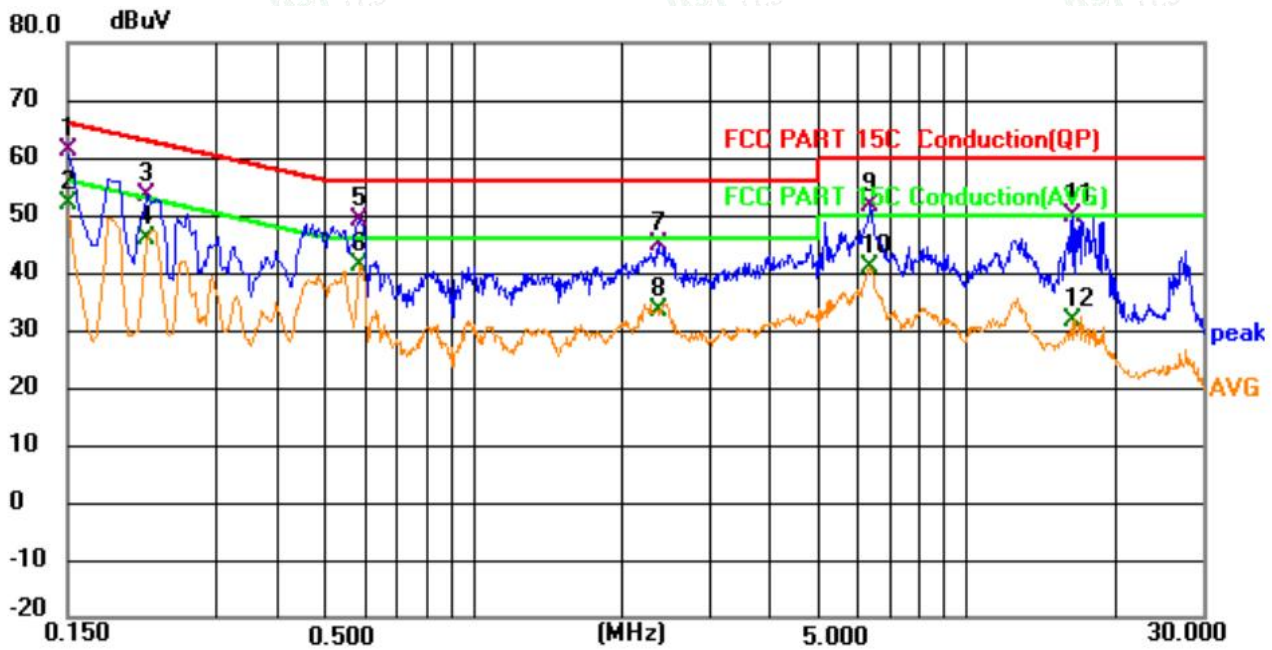

No.	Mk.	Freq.	Reading Level	Correct Factor	Measure-ment	Limit	Margin		
		MHz	dBuV	dB	dBuV	dBuV	dB	Detector	Comment
1		0.150	40.62	20.63	61.25	66.00	-4.75	QP	
2	*	0.150	31.33	20.63	51.96	56.00	-4.04	AVG	
3		0.217	32.83	20.69	53.52	62.93	-9.41	QP	
4		0.217	25.08	20.69	45.77	52.93	-7.16	AVG	
5		0.587	28.18	20.92	49.10	56.00	-6.90	QP	
6		0.587	20.22	20.92	41.14	46.00	-4.86	AVG	
7		2.364	23.90	20.77	44.67	56.00	-11.33	QP	
8		2.364	12.75	20.77	33.52	46.00	-12.48	AVG	
9		6.373	31.32	20.39	51.71	60.00	-8.29	QP	
10		6.373	20.68	20.39	41.07	50.00	-8.93	AVG	
11		16.381	28.98	20.68	49.66	60.00	-10.34	QP	
12		16.381	11.03	20.68	31.71	50.00	-18.29	AVG	

Neutral

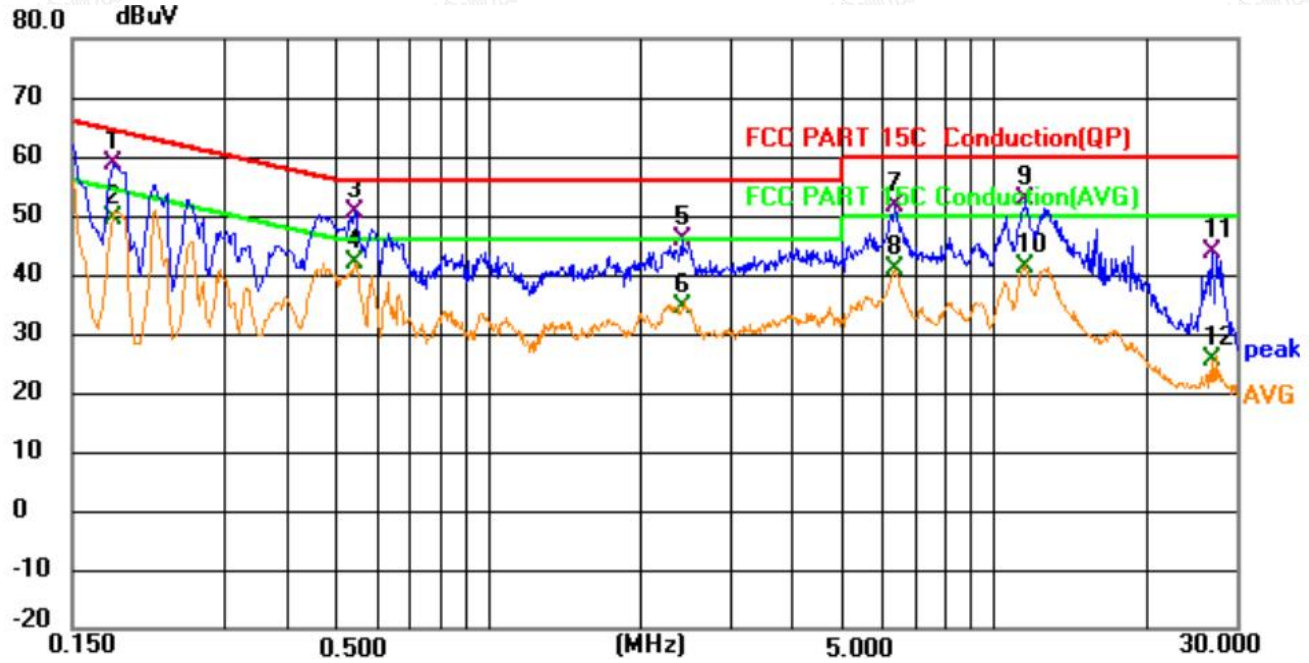

No.	Mk.	Freq.	Reading Level	Correct Factor	Measure-ment	Limit	Margin		
		MHz	dBuV	dB	dBuV	dBuV	dB	Detector	Comment
1		0.181	38.02	20.60	58.62	64.44	-5.82	QP	
2		0.181	28.92	20.60	49.52	54.44	-4.92	AVG	
3		0.541	29.77	20.88	50.65	56.00	-5.35	QP	
4	*	0.541	20.99	20.88	41.87	46.00	-4.13	AVG	
5		2.413	24.95	20.82	45.77	56.00	-10.23	QP	
6		2.413	13.64	20.82	34.46	46.00	-11.54	AVG	
7		6.360	30.98	20.47	51.45	60.00	-8.55	QP	
8		6.360	20.39	20.47	40.86	50.00	-9.14	AVG	
9		11.499	31.95	20.60	52.55	60.00	-7.45	QP	
10		11.499	20.52	20.60	41.12	50.00	-8.88	AVG	
11		27.082	22.99	20.88	43.87	60.00	-16.13	QP	
12		27.082	4.80	20.88	25.68	50.00	-24.32	AVG	

****Note: 1). Pre-scan all modes and recorded the worst case results in this report IEEE 802.11b mode (Low Channel).*

2). Measurement = Reading + Correct Factor, Margin = Measurement – Limit,
Correct Factor=Lisn Factor+Cable Factor+Insertion loss of Pulse Limiter.

5.9. Antenna Requirements

5.9.1 Standard Applicable

According to antenna requirement of §15.203.

According to antenna requirement of §15.203, an intentional radiator shall be designed to ensure that no antenna other than that furnished by the responsible party shall be used with the device. The use of a permanently attached antenna or of an antenna that uses a unique coupling to the intentional radiator shall be considered sufficient to comply with the provisions of this Section. The manufacturer may design the unit so that a broken antenna can be re-placed by the user, but the use of a standard antenna jack or electrical connector is prohibited. This requirement does not apply to carrier current devices or to devices operated under the provisions of Sections 15.211, 15.213, 15.217, 15.219, or 15.221. Further, this requirement does not apply to intentional radiators that must be professionally installed, such as perimeter protection systems and some field disturbance sensors, or to other intentional radiators which, in accordance with Section 15.31(d), must be measured at the installation site. However, the installer shall be responsible for ensuring that the proper antenna is employed so that the limits in this Part are not exceeded.

And according to §15.247(4)(1), system operating in the 2400-2483.5MHz bands that are used exclusively for fixed, point-to-point operations may employ transmitting antennas with directional gain greater than 6dBi provided the maximum peak output power of the intentional radiator is reduced by 1 dB for every 3 dB that the directional gain of the antenna exceeds 6dBi.

5.9.2 Antenna Connected Construction

5.9.2.1. Standard Applicable

According to § 15.203, an intentional radiator shall be designed to ensure that no antenna other than that furnished by the responsible party shall be used with the device.

5.9.2.2. Antenna Connector Construction

The gains of antenna used for transmitting is 5.42dBi(Max.), and the antenna is External Antenna and no consideration of replacement. Please see EUT photo for details.

5.9.2.3. Results: Compliance.

6. LIST OF MEASURING EQUIPMENTS

Item	Equipment	Manufacturer	Model No.	Serial No.	Cal Date	Due Date
1	Power Meter	R&S	NRVS	100444	2024-06-06	2025-06-05
2	Power Sensor	R&S	NRV-Z81	100458	2024-06-06	2025-06-05
3	Power Sensor	R&S	NRV-Z32	10057	2024-06-06	2025-06-05
4	Test Software	Tonscend	JS1120-2	/	N/A	N/A
5	RF Control Unit	Tonscend	JS0806-2	N/A	2024-11-08	2025-11-07
6	MXA Signal Analyzer	Agilent	N9020A	MY50510140	2024-10-08	2025-10-07
7	DC Power Supply	Agilent	E3642A	N/A	2024-10-08	2025-10-07
8	EMI Test Software	AUDIX	E3	/	N/A	N/A
9	3m Semi Anechoic Chamber	SIDT FRANKONIA	SAC-3M	03CH03-HY	2024-06-06	2025-06-05
10	Positioning Controller	Max-Full	MF7802BS	MF780208586	N/A	N/A
11	Active Loop Antenna	SCHWARZBECK	FMZB 1519B	00005	2024-07-13	2027-07-12
12	By-log Antenna	SCHWARZBECK	VULB9163	9163-470	2024-08-03	2027-08-02
13	Horn Antenna	SCHWARZBECK	BBHA 9120D	9120D-1925	2024-07-13	2027-07-12
14	Broadband Horn Antenna	SCHWARZBECK	BBHA 9170	791	2024-07-13	2027-07-12
15	Broadband Preamplifier	SCHWARZBECK	BBV9719	9719-025	2024-07-30	2025-07-29
16	EMI Test Receiver	R&S	ESR 7	101181	2024-06-06	2025-06-05
17	RS SPECTRUM ANALYZER	R&S	FSP40	100503	2024-06-06	2025-06-05
18	Low-frequency amplifier	SchwarzZBECK	BBV9745	00253	2024-10-08	2025-10-07
19	High-frequency amplifier	JS Denki Pte	PA0118-43	JSPA21009	2024-10-08	2025-10-07
20	6dB Attenuator	/	100W/6dB	1172040	2024-06-06	2025-06-05
21	3dB Attenuator	/	2N-3dB	/	2024-10-08	2025-10-07
22	EMI Test Receiver	R&S	ESPI	101940	2024-06-06	2025-06-05
23	Artificial Mains	R&S	ENV216	101288	2024-06-06	2025-06-05
24	10dB Attenuator	SCHWARZBECK	MTS-IMP-136	261115-001-0032	2024-06-06	2025-06-05
25	EMI Test Software	Farad	EZ	/	N/A	N/A
26	Antenna Mast	Max-Full	MFA-515BSN	1308572	N/A	N/A
27	Pulse Limiter	R&S	ESH3-Z2	102750-NB	2024-06-06	2025-06-05

7. TEST SETUP PHOTOGRAPHS OF EUT

Please refer to separated files for Test Setup Photos of the EUT.

8. EXTERIOR PHOTOGRAPHS OF THE EUT

Please refer to separated files for External Photos of the EUT.

9. INTERIOR PHOTOGRAPHS OF THE EUT

Please refer to separated files for Internal Photos of the EUT.

----------THE END OF REPORT----------