RF Crazy®

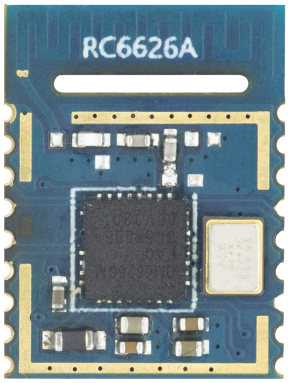

RC6626A
Bluetooth 5.2 Low Energy Transparent Transmission Module

Version 1.1.1

Aug. 12th, 2024

1 Module Overview

1.1 Description

The RC6626A is a powerful, compact size, cost-effective, low-power Bluetooth low energy module based on the OM6626CM SoC from Onmicro Semiconductor. With an ARM® Cortex™-M4FCPU, embedded with a 2.4 GHz transceiver, and integrated antenna, the RC6626A provides a complete RF solution with no additional RF design, allowing faster time-to-market. Providing rich peripheral IOs, the RC6626A can power most applications, simplifying designs and reducing BOM costs. It supports BLE 5.3 and is preprogrammed with easy-to-use transparent transmission firmware with AT commands. It targets 2.4 GHz Bluetooth low energy systems, proprietary 2.4 GHz systems, Human-Interface Devices (keyboard, mouse, and remote control), sports and leisure equipment, mobile phone accessories, and consumer electronics.

The RC6626A can work in bridge mode (transparent transmission mode).

In bridge mode, the user's MCU can communicate with the mobile device bi-directionally through the universal serial ports of RC6626A. Users can also manage and control certain communication parameters through specific AT commands. The detailed meaning of the user data is defined by the upper applications. Mobile devices can write the module through the APP, the written data will be sent to the user's MCU through serial ports. Then the module will transmit the data packet from the user's MCU to the mobile devices automatically. Under the development of this mode, the user needs to undertake the code design for the MCU and the APPs for mobile devices.

To ensure the stability of the firmware, the module will start to work normally after 1.6 s. When transmitting big-size data packets, it is recommended to start working after the module is connected for 5 s. The MTU, connection interval, and other operations need to be confirmed when a connection is established. If the high-speed transparent transmission is carried out at this time, packet loss or device jamming is very easy to occur.

1.2 Key Features

Table 1. Key Features

Function	Support	Function	Support
Modify the Bluetooth Broadcast Name	√	Modify the Bluetooth Broadcast Content	√
Modify the Bluetooth MAC Address	√	Bluetooth Master Role Automatic Connection	√
Modify the Bluetooth Service	√	Bluetooth Master-slave Connection at the same time	√
Modify the Bluetooth Broadcast Interval	√	The number of Bluetooth slave roles can be modified	√
Modify the Bluetooth Connect Interval	√	Bluetooth Proximity Discovery	√
Bluetooth Proximity Automatic Unlocking	√	Bluetooth Proximity Automatic Unlocking Signal Adjustable	√
Bluetooth Observer Mode	√	Bluetooth Master Supports Sending Data in any way	√
Bluetooth Button Trigger Binding	√	Bluetooth Binding Name is Configurable	√
Command control IO flip	√	Command control 3-way PWM	√

Table 2. Power Consumption

Event	Average Current	Test Condition / Remark
Sleep	2.30 μA	Serial port sleep, Bluetooth broadcast off
Broadcast	57.52 μA	Broadcast interval: 200 ms
Broadcast	24.91 μA	Broadcast interval: 500 ms
Broadcast	13.29 μA	Broadcast interval: 1000 ms
Broadcast	8.11 μA	Broadcast interval: 2000 ms
Connection	101.08 μA	Connection interval: 50 ms
Connection	52.05 μA	Connection interval: 100 ms

1.3 Default Parameters

1. Device name: RF-CRAZY.
2. Baud rate: 115200 bps(2-wire serial port).
3. Broadcast interval: 200 ms.
4. Connection interval: 20 ~ 75 ms.
5. Broadcast mode: connectable.
6. Serial port status: On (wake-up state).

1.4 Device Status

Report Status	Example	Remarks
DEVICE START	DEVICE START	Device start.
S-CONNECTED	S-CONNECTED:AB:F1:48:E2:0A:7D	The Bluetooth slave device is successfully connected to the device with the MAC address “AB:F1:48:E2:0A:7D”.
M-CONNECTED	S-CONNECTED:F9:D1:18:A2:03:1A	The Bluetooth master device successfully connected to the device with the MAC address “F9:D1:18:A2:03:1A”.
S-DISCONNECTED	S-DISCONNECTED:AB:F1:48:E2:0A:7D	The connection between the Bluetooth slave device and the device with MAC address "AB:F1:48:E2:0A:7D" is lost.
M-DISCONNECTED	M-DISCONNECTED:F9:D1:18:A2:03:1A	The connection between the Bluetooth master device and the device with MAC address "F9:D1:18:A2:03:1A" is lost.
CONNECT TIMEOUT	CONNECT TIMEOUT	Timeout when the Bluetooth master device connects to the device.
SLEEP	SLEEP	The serial port enters sleep mode, the receiving function is turned off, and the printing function is normal.
WAKE UP	WAKE UP	The serial port is awakened.

1.3 Applications

- Internet of Things (IoT)
- Internet gateway
- Industrial control
- Home automation
- Smart plug and metering
- Beacons
- Access control
- IP Network sensor nodes
- Security systems
- Wearables
- Building automation
- Retail
- Sensor networks
- Medical devices
- Sports equipment

1.6 Functional Block Diagram

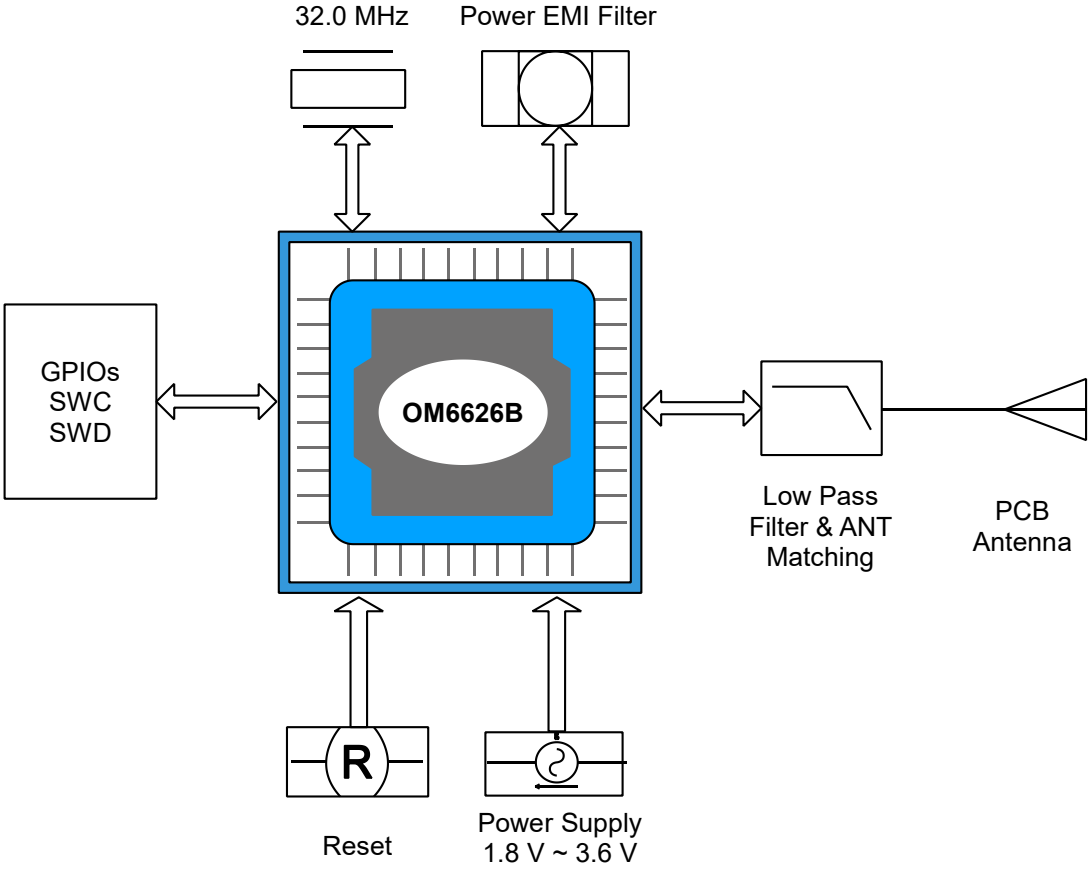

Figure 1. The Functional Block Diagram of RC6626A

1.7 Part Number Conventions

The part numbers are of the form of RC6626A where the fields are defined as follows:

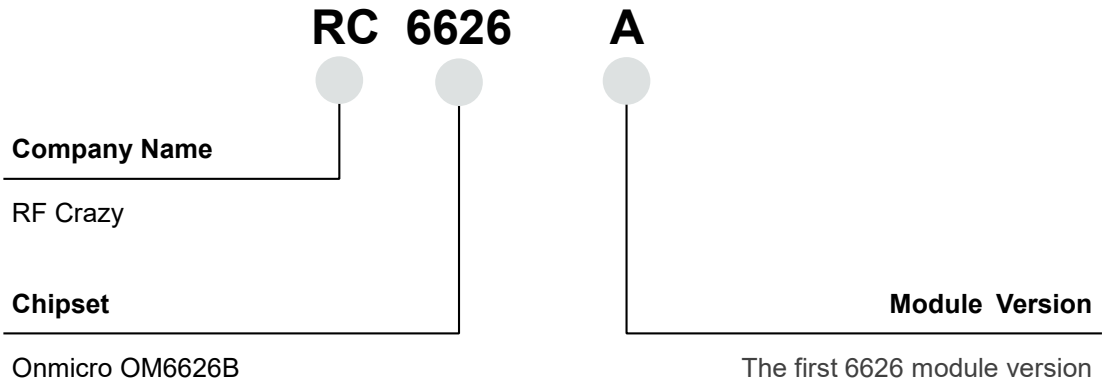

Figure 2. The Part Number Conventions of RC6626A

1.8 Schematic Diagram of Module Working Mode

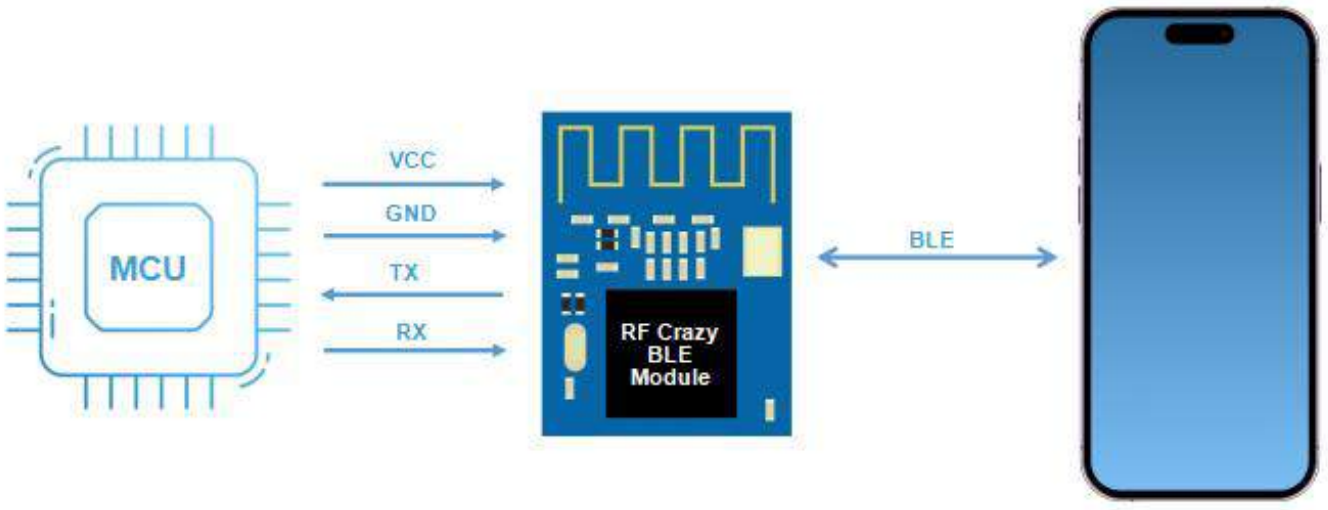

Figure 3. Schematic Diagram of Module in Bridge Mode

Table of Contents

1 Module Overview 1
1.1 Description 1
1.2 Key Features 2
1.3 Default Parameters 2
1.4 Device Status 3
1.3 Applications 3
1.6 Functional Block Diagram 4
1.7 Part Number Conventions 4
1.8 Schematic Diagram of Module Working Mode 5
Table of Contents 6
Table of Figures 7
Table of Tables 8
2 Module Photo, Footprint, Parameters and Pin Assignment 8
2.1 Module Photo 9
2.2 Module Footprint 9
2.3 Module Parameters 10
2.4 Pin Assignment 11
3 UART Transparent Transmission Protocol 13
4 BLE Protocol Specification (APP Interface) 13
Service UUID 13
BLE Data Receiving UUID(RX Characteristics) 13
BLE Data Transmitting UUID(TX Characteristics) 13
5 AT Commands 14
5.1 AT Command Format 14
5.2 AT Command List 15
5.3 Detailed AT Commands Description 17
6 Operation example 19
6.1 Transparent Transmission 19
6.2 Beacon Setting 20
6.3 The phone automatically connects when it is close to the Bluetooth module 21
6.4 The module actively and automatically connects to the other module 22
6.5 Direct drive IO and PWM control 23
7 iOS APPs Programming Reference 24
8 MCU Reference Code 26
8 Module Peripheral Recommended Reference Design 27
9 Mounting Suggestions 28
10 Cautions 31
10.1 Reflow Soldering 31
10.2 Usage Condition Notes 32
10.3 Storage Notes 33
10.4 Optional Packaging 34
11 Revision History 35
12 Contact Us 36

Table of Figures

Figure 1. The Functional Block Diagram of RC6626A 4
Figure 2. The Part Number Conventions of RC6626A 4
Figure 3. Schematic Diagram of Module in Bridge Mode 5
Figure 4. The Module Photo of RC6626A 9
Figure 5. The Module Footprint of RC6626A (mm) 9
Figure 6. The Pin Assignment of RC6626A 11
Figure 7. RC6626A Peripheral Recommended Reference Design 27
Figure 8. The Recommended module mounting example of RC52832A 28
Figure 9. The other module mounting examples of RC52832A 29
Figure 10. The Placement of resin or plastic parts of RC52832A 30
Figure 11. Temperature Profile for Evaluation of Solder Heat Resistance of a Component (at Solder Joint) 31
Figure 12. Optional Packaging Mode 34

Table of Tables

Table 1. Key Features 2
Table 2. Power Consumption 2
Table 3. The Parameters of RC6626A 10
Table 3. The Pin Functions of RC6626A 11
Table 4. AT Command Format 14
Table 5. AT Command List 15
Table 6. Temperature Profile 31

2 Module Photo, Footprint, Parameters and Pin Assignment

2.1 Module Photo

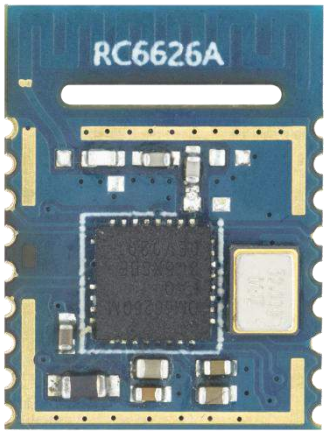

Figure 4. The Module Photo of RC6626A

2.2 Module Footprint

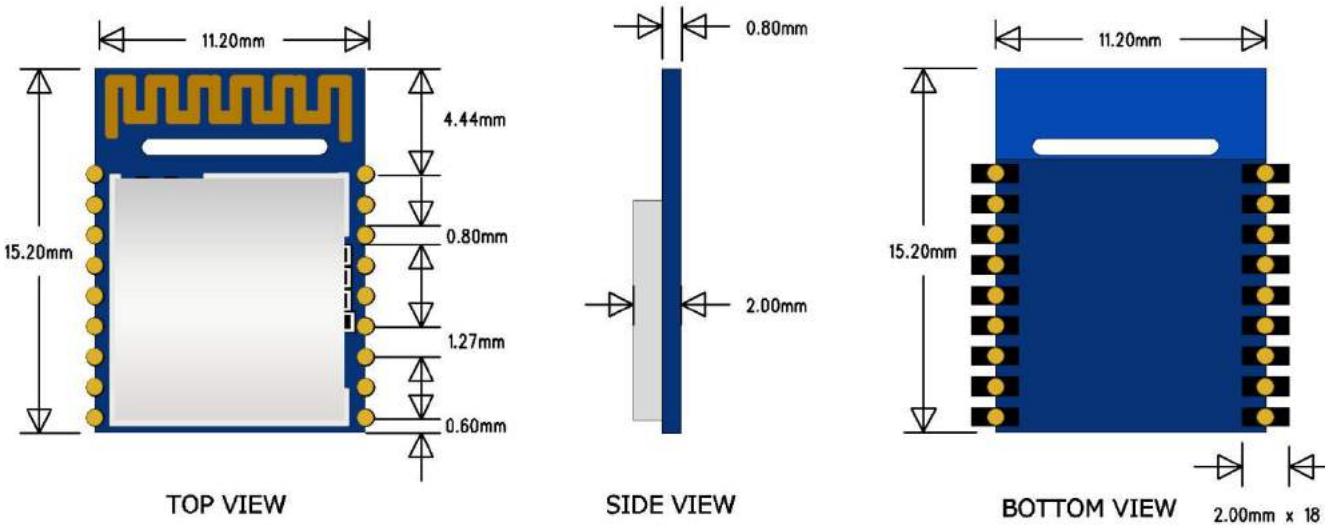

Figure 5. The Module Footprint of RC6626A (mm)

2.3 Module Parameters

Table 3. The Parameters of RC6626A

Chipset	OM6626B
Supply Power Voltage	1.6 V ~ 3.6 V, recommended to 3.3 V
Modulation	GFSK
Frequency	2402 MHz ~ 2480.0 MHz
Chanel Number	39 (channel spacing of 2 MHz)
Transmit Power	-30.0 dBm ~ +10.0 dBm
Receiving Sensitivity	-99 ~ -95 dBm
GPIO	13
Crystal	32 MHz
EFUSE	256-bit
SRAM	80 KB
sFlash	1 MB
Package	SMT Packaging
Frequency Error	±20 kHz
Dimension	15.1 mm x 11.2 mm x (1.50 ± 0.1) mm
Type of Antenna	PCB Antenna
Operating Temperature	-40 ℃ ~ +85 ℃
Storage Temperature	-55 ℃ ~ +125 ℃
Hibernation Current	1.2 μA
Broadcast Event Current	11.19 μA (Broadcast interval: 1000 ms @ 0 dBm)

2.4 Pin Assignment

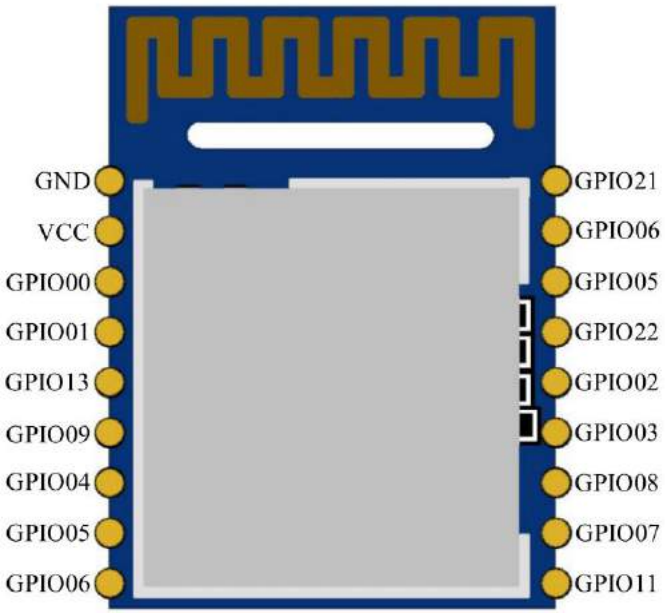

Figure 6. The Pin Assignment of RC6626A

Table 3. The Pin Functions of RC6626A

Pin	Name	Function	Remarks
Pin1	GND	Ground	Ground
Pin2	VCC	Power Input	Power supply: 1.8 V ~ 3.6 V; recommend: 3.3 V
Pin3	SWC/GPIO00	SWCLK	Connect J-Link simulator SWCLK(Multiplexing pin: low level when in slave connected state, high level in other states).
Pin4	SWD/GPIO01	SWDIO	Connect J-Link simulator SWDIO(Multiplexing pin: the master successfully connects to other devices at the low level, and no device is connected at the high level).
Pin5	RESET/GPIO13	RESET	Reset IO. Valid at low level, low level lasts for more than 30ms.
Pin6	GPIO09	PWM2	The AT command is valid when PWM is enabled, PWM channel 2, the default frequency is 1kHz and the duty cycle is 50%.
Pin7	GPIO04	BOOT	When using UART to download, connect to GND.
Pin8	GPIO05	TXD	When using UART to download, connect to RX.
Pin9	GPIO06	RXD	When using UART to download, connect to TX.
Pin10	GPIO11	PWM3	The AT command is valid when PWM is enabled, PWM channel 3, the default frequency is 1kHz and the duty cycle is 50%.
Pin11	GPIO07	I/O	Direct drive IO, the output state can be controlled by the AT commands, the default is high level (multiplexing pin: the binding state is displayed when the binding function is used).
Pin12	GPIO08	PWM1	The AT command is valid when PWM is enabled, PWM channel 1, the default frequency is 1kHz and the duty cycle is 50%.

Pin13	GPIO03	I/O	It is valid when the HID AT command is enabled, indicating the status of the signal value. It is low when the signal threshold is reached, otherwise it is high (the default value is high level).
Pin14	GPIO02	I/O	The function of enabling the binding AT command is valid, and it is pulled down for more than 30ms to enter the binding state and start broadcasting the binding special content. Refer to GPIO00 for the binding state (pull-up by default).
Pin15	GPIO22	I/O	Serial port sleep wake-up (pull-up by default, wake-up when low level lasts for more than 30ms).
Pin16	GPIO05	UTX	User serial data transmitting port
Pin17	GPIO06	URX	User serial data receiving port
Pin18	GPIO21	I/O	Enable the binding AT command function to be effective. Pull down for more than 30ms to enter the binding state, and start searching for surrounding devices that meet the binding conditions to connect. For the binding state, refer to GPIO01 (pull-up by default).

3 UART Transparent Transmission Protocol

The bridge mode means setting up a bi-directional communication way between the user MCU and mobile devices by the mutual connection between the serial port and the user MCU. Users can reset the serial port baud rate and BLE connection interval by the specified AT commands. The module will have different data handling capabilities, as per different serial port baud rates and BLE connection intervals. The default baud rate is 115200 bps.

When the module serial port receives data and transmits it to the mobile device, there are no strict requirements for the serial data packets. Data packets from the mobile device to the module must be subcontracted by itself (between 1 and 244 bytes per packet). The module will transmit the packets to the master in turn, after receiving the packets.

The maximum MTU of the module is 247 bytes, but the protocol needs to use 3 Bytes, and the actual payload used by the user is 244 Bytes.

4 BLE Protocol Specification (APP Interface)

➢ Service UUID

6E400001B5A3F393E0A9E50E24DCCA9E

➢ BLE Data Receiving UUID(RX Characteristics)

Characteristics UUID	6E400002B5A3F393E0A9E50E24DCCA9E
Executable operations	Write, Write No Response
Remarks	The BLE input is transmitted to the serial port output: After APP writes to this channel through the BLE API interface, the data will be output from the TX serial port.

➢ BLE Data Transmitting UUID(TX Characteristics)

Characteristics UUID	6E400003B5A3F393E0A9E50E24DCCA9E
Executable operations	Notify
Remarks	The serial port input is transmitted to the BLE output, and the data input from the RX serial port will be notified in this channel and sent to the mobile device.

5 AT Commands

5.1 AT Command Format

Table 4. AT Command Format

Type	Command Format	Description
Test Command	AT+[x]=?	This command is used to query the parameters and value range of the setting commands.
Query Command	AT+[x]?	This command returns the current value of the parameter.
Configure Command	AT+[x]=<…>	This command is used to set user-defined parameter values.
Execute Command	AT+[x]	This command is used to perform the function of immutable parameters.

Note:

1. AT commands can be sent through the APP and serial port.
2. The default baud rate of the serial port is **115200 bps**, **8-bit data bit**, **1 stop bit**, and **no parity**.
3. Not every command has the above four types of commands.
4. The AT command must be **capitalized.** If it is sent through the serial port, it must end with **a carriage return and line feed (CRLF is \r\n, which is 0D0A in HEX format)**.
5. The **< >** returned in the query AT command indicates the optional parameters, and **[ ]** indicates the required parameters. If all parameters of the command are optional parameters, at least one parameter is needed to be filled, otherwise it is also regarded as a command error.

   Example: AT+SCAN=<0:disable,1:enable>,<time:1-32767>,<mac>,<name>, you can fill in AT+SCAN=1,,,RF-CRAZY\r\n
6. The parameter positions that are not filled in the optional parameter command must **be reserved**. Refer to the previous example.
7. The parameters in any command cannot contain invisible characters such as spaces and tabs.
8. The value range of the parameters cannot be exceeded when setting parameters.

5.2 AT Command List

Table 5. AT Command List

AT Command	Function	Remarks
AT+VERSION	Query the firmware version	Take effect immediately, it will not be saved after power-down
AT+RESTART	Restart	Take effect immediately, it will not be saved after power-down
AT+RESET	Restore the device parameters to factory settings and restart	Take effect immediately, it will not be saved after power-down
AT+CMD_FLAG	Query/set whether to enable "+++" as the judgment flag for entering the AT command	Take effect immediately, save after power-down
AT+EXIT	Exit AT command mode（Effective when AT+CMD_FLAG=1）	Take effect immediately, it will not be saved after power-down
AT+UART	Query/set baud rate	Take effect immediately, save after power-down(only save the baud rate)
AT+ECHO	Query/set whether the serial port is echoed	Take effect immediately, it will not be saved after power-down
AT+IO_CONTROL	Query/set GPIO07 output level status	Take effect immediately, it will not be saved after power-down
AT+PWM	Query/set PWM parameters	Take effect immediately, it will not be saved after power-down
AT+NAME	Query/set device name	Take effect immediately
AT+MAC	Query/set device MAC address	Take effect after restart, save after power-down
AT+AD_PACKET	Query/set broadcast content	Take effect immediately
AT+ADS_TYPE	Query/set broadcast type	Take effect immediately
AT+ADS_INTERVAL	Query/set broadcast interval	Take effect immediately, save after power-down
AT+ADS_EN	Query/set whether Bluetooth broadcast is enabled	Take effect immediately, save after power-down
AT+ADS_MAX	Query/set the maximum number of Bluetooth broadcasts (default is 1)	Take effect after restart, save after power-down
AT+LATENCY	Query/set the Bluetooth connection latency parameters	Take effect after restart, save after power-down
AT+POWER	Query/set TX power	Take effect immediately, save after power-down
AT+CNT_INTERVAL	Query/set connection interval	Take effect after restart, save after power-down
AT+SVC_CHAR_NUM	Query/set the number of services and characteristics	Take effect after restart, save after power-down
AT+SVC1	Query/set the service1 parameters	Take effect after restart, save after power-down
AT+CHAR1	Query/set the characteristic1 parameters	Take effect after restart, save after power-down
AT+SVC2	Query/set the service2 parameters	Take effect after restart, save after power-down
AT+CHAR2	Query/set the characteristic2 parameters	Take effect after restart, save after power-down
AT+SCAN	Scan Bluetooth devices	Take effect immediately
AT+CONNECT	Query/set the connection parameters	Take effect immediately
AT+OBSERVER	Discover the surrounding broadcast	Take effect immediately
AT+AUTO_CNT	Query/set the automatic	Take effect immediately, save after

	reconnection parameters	power-down
AT+DISCONNECT	Disconnect the connected device	Take effect immediately, it will not be saved after power-down
AT+WRITE_SET	Query/set the method of sending data by the Bluetooth master device	Take effect immediately, it will not be saved after power-down
AT+HID_EN	Query/set whether the Bluetooth HID function is enabled	Take effect after restart, save after power-down
AT+NEAR_RSSI	Query/set the threshold value of the device proximity signal when the Bluetooth HID function is turned on	Take effect after restart, save after power-down
AT+LEAVE_RSSI	Query/set the threshold value of the signal when the device leaves when the Bluetooth HID function is turned on	Take effect after restart, save after power-down
AT+RSSI_GET	When the Bluetooth HID function is turned on, the signal value of the mobile phone connection is obtained in real time and reported every 500 ms	Take effect immediately, it will not be saved after power-down
AT+BIND	Query/set the Bluetooth binding name	Take effect immediately, save after power-down
AT+SLAVE_BIND_IO	Query/set whether to enable the Bluetooth slave binding function	Take effect immediately, save after power-down
AT+MASTER_BIND_IO	Query/set whether to enable the Bluetooth master binding function	Take effect immediately, save after power-down
Return Value of AT Command		
OK	Successful operation	
FAIL	Failed operation	
ERROR	Error operation	
BUSY	The operation is busy, please wait for the fulfillment of the previous operation	

5.3 Detailed AT Commands Description

AT Commands	Attribute	Format	Example	Description	Effective Method	Whether to save after power-down
AT+NAME	Slave Role AT Commands	AT+NAME=[name:max 16bytes],<disposable flag:1>	AT+NAME=123,1\r\n	Set the name to "123", not saving, and restore to the default name after restart. 16 bytes maximum.	Take effect immediately	If parameter 2 is not available, save after power-down
AT+MAC		AT+MAC=[MAC]	AT+MAC=11:22:33:44:55:66\r\n	Set the MAC address to“11:22:33:44:55:66”.	Take effect after restart	Save after power-down
AT+ADS_PACKET		AT+ADS_PACKET=[adveritse:max 31 bytes HEX],<scan response:max 31 bytes HEX>,<disposable flag:1>	AT+ADS_PACKET=020106090952462D4352415A59,,1\r\n	Set the broadcast content to "020106090952462D4352415A59", it will not be saved and will be restored after restart.	Take effect immediately	If parameter 3 is not available, save after power-down
AT+ADS_TYPE		AT+ADS_TYPE=[0:unconnectable,1:connectable],<disposable flag:1>	AT+ADS_TYPE=0,1\r\n	Set the broadcast to a non-connectable attribute, not saving, and restore after restart. The default is connectable broadcast.	Take effect immediately	If parameter 2 is not available, save after power-down
AT+ADS_INTERVAL		AT+ADS_INTERVAL=[20-10240 ms]	AT+ADS_INTERVAL=200\r\n	Set the broadcast interval to 200 ms, the default interval is 200 ms.	Take effect immediately	Save after power-down
AT+ADS_EN		AT+ADS_EN=[0:off,1:on]	AT+ADS_EN=0\r\n	Turn off the broadcast.	Take effect immediately	Save after power-down
AT+ADS_MAX		AT+ADS_MAX=[0-6]	AT+ADS_MAX=2\r\n	Set the module to support 2 broadcasts. If broadcast 1 is connected, broadcast 2 will continue to broadcast. If both broadcasts are connected, the broadcast will stop. The number of broadcasts supported by default is 1.	Take effect after restart	Save after power-down
AT+LATENCY		AT+LATENCY=[latency:0-6]	AT+LATENCY=1\r\n	Set the connection latency to 1, the default is 0.	Take effect after restart	Save after power-down
AT+POWER		AT+POWER=[-30 to 10 dBm]	AT+POWER=5\r\n	Set the transmit power to 5 dBm, the default is 0 dBm.	Take effect immediately	Save after power-down
AT+CNT_INTERVAL		AT+CNT_INTERVAL=[min interval],[max interval]	AT+CNT_INTERVAL=30,30\r\n	Set the minimum and maximum connection interval to 30 ms, the default value is 20 ms, and the support range is 8 ~ 4000 ms.	Take effect after restart	Save after power-down
AT+DISCONNECT		AT+DISCONNECT=<0:Peripheral,1:Central>,<MAC>	AT+DISCONNECT\r\n	Disconnect the device immediately.	Take effect immediately	No
AT+SVC_CHAR_NUM	If you need the slave to match the APP, you can change the UUID of the service and characteristic.	AT+SVC_CHAR_NUM=[services:max 2],[Characteristics:max 2]	AT+SVC_CHAR_NUM=1,2\r\n	The default value is 1 service and 2 char UUIDs.	Take effect after restart	Save after power-down
AT+SVC1		AT+SVC1=[uuid len],[uuid]	AT+SVC1=2,E1FF\r\n	Set service1 UUID to 16-bit FFE1.	Take effect after restart	Save after power-down
AT+CHAR1		AT+CHAR1=[uuid len],[0:r,1:wn,2:w,3:n,4:i,5:r|w,6:r|wn,7:r|w|wn,8:w|wn|,9:w|wn|n,10:w|n (properties - r:read, w:write, wn:write no response, n:notify, i:indicate)],[uuid]	AT+CHAR1=2,3,E2FF\r\n	Set char1 UUID to 16-bit FFE2, notify attribute.	Take effect after restart	Save after power-down
AT+SVC2		AT+SVC2=[uuid len],[uuid]	AT+SVC2=2,F1FF\r\n	Set service2 UUID to 16-bit FFF1.	Take effect after restart	Save after power-down
AT+CHAR2		AT+CHAR2=[uuid len],[0:r,1:wn,2:w,3:n,4:i,5:r|w,6:r|wn,7:r|w|wn,8:w|wn|,9:w|wn|n,10:w|n (properties - r:read, w:write, wn:write no response, n:notify, i:indicate)],[uuid]	AT+CHAR2=2,8,F2FF\r\n	Set char2 UUID to 16-bit FFF2, write no response attribute.	Take effect after restart	Save after power-down
AT+SCAN	Master Role AT Commands	AT+SCAN=<0:disable,1:enable>,<time:1-32767>,<mac>,<name>	AT+SCAN\r\n	Scan surrounding Bluetooth devices, parameter 1: turn off or start, parameter 2: scan duration (default 5) seconds, parameter 3: scan the specified MAC address, parameter 4: scan the specified name device.	Take effect immediately	No
AT+CONNECT		AT+CONNECT=<scan list id>,<MAC>	AT+CONNECT=,A9:1B:55:0F:FB:AB\r\n	Connect to the device with MAC address "A9:1B:55:0F:FB:AB".	Take effect immediately	No
AT+OBSERVER		AT+OBSERVER=[0:disable,1:enable],<time:1-32767>,<name>,<MAC>	AT+OBSERVER=1,10,RF-CRAZY\r\n	Discover the surrounding devices with the broadcast name "RF-CRAZY", and print all the broadcast data, the duration is 10 seconds (default duration is 5 seconds).	Take effect immediately	No
AT+AUTO_CNT		AT+AUTO_CNT=[0:delete,1:add],[MAC]	AT+AUTO_CNT=1,A9:1B:55:0F:FB:AB\r\n	Add "" devices to the automatic reconnection list, supporting up to 6 devices.	Take effect immediately	Save after power-down
AT+DISCONNECT		AT+DISCONNECT=<0:Peripheral,1:Central>,<MAC>	AT+DISCONNECT=1\r\n	Disconnect all slave devices connected to the master device.	Take effect immediately	No
AT+WRITE_SET		AT+WRITE_SET=[write handle],[0:write no response,1:write cmd]	AT+WRITE_SET=18,0\r\n	Set the handle and method of sending data. RF Crazy's modules do not need to set this parameter by default. If you connect to an unmatched Bluetooth module from another company, you need to know the module's receiving data handle and method. Note: If multiple devices are connected, all devices follow this sending rule, that is, they cannot be compatible with two or more different communication handles and methods.	Take effect immediately	No
AT+UART	Peripheral AT Commands	AT+UART=<0:off,1:on>,<uart bps:4800 to 250000>	AT+UART=1,9600\r\n	Start the serial port and set the baud rate to 9600 bps. The serial port is enabled by default after power-on.	Take effect immediately	Save after power-down(only save baud rate)
AT+ECHO		AT+ECHO=[0:off,1:on]	AT+ECHO=1\r\n	Enable the serial port echo.	Take effect immediately	No
AT+IO_CONTROL		AT+IO_CONTROL=[output status 1:hight,0:low]	AT+IO_CONTROL=0\r\n	GPIO-07 outputs a low level, default high level.	Take effect immediately	No
AT+PWM		AT+PWM=[ch1 en /ch2 en /ch3 en],[ch1 duty /ch2 duty /ch3 duty]	AT+PWM=1/1/1,10/80/50\r\n	Enable PWM channels 1, 2, and 3, with duty cycles of 10%, 80%, and 50% respectively. PWM is disabled by default. If you enable PWM but do not set the duty cycle, the default duty cycle value is 50%.	Take effect immediately	No
AT+VERSION	Basic AT Commands	AT+VERSION	AT+VERSION\r\n	Query the firmware version.	Take effect immediately	No

AT+RESTART		AT+RESTART	AT+RESTART\r\n	The device restarts, and it takes about 950ms from returning OK to successfully restarting.	Take effect immediately	No
AT+RESET		AT+RESET	AT+RESET\r\n	The device is restored to factory settings.	Take effect immediately	No
AT+CMD_FLAG		AT+CMD_FLAG=[0:disable,1:enable]	AT+CMD_FLAG=1\r\n	Enable "+++" as the flag for entering the AT command. It is not enabled by default.	Take effect immediately	Save after power-down
AT+EXIT		AT+EXIT	AT+EXIT\r\n	If "+++" is enabled as the flag for entering the AT command, this command is used to exit the command mode.	Take effect immediately	No
AT+HID_EN	**HID (Proximity Discovery) AT Commands**	AT+HID_EN=[0:disable,1:enable]	AT+HID_EN=1\r\n	Enable the HID function. After it is enabled, the mobile phone system's Bluetooth can discover the module's broadcast, and after the connection is paired, the system Bluetooth will automatically reconnect when it finds the device again. Note: Please do not use "AT+ADS_PACKET" when enabling this function, otherwise the device cannot automatically change to the standard HID format. You can use "AT+NAME" to set the name, but after this function is enabled, the name can only support a maximum of 13 bytes.	Take effect after restart	Save after power-down
AT+NEAR_RSSI		AT+NEAR_RSSI=[rssi]	AT+NEAR_RSSI=-70\r\n	Set the signal reference value when the mobile phone is close to the module to -70 dBm. When the mobile phone is connected to the module, if the signal is greater than this value, GPIO-03 outputs a low level. The IO outputs a high level by default.	Take effect after restart	Save after power-down
AT+LEAVE_RSSI		AT+LEAVE_RSSI=[rssi]	AT+LEAVE_RSSI=-80\r\n	Set the reference signal value when the mobile phone leaves the module to -80 dBm. When the signal value between the mobile phone and the module is lower than this value, GPIO-03 outputs a high level.	Take effect after restart	Save after power-down
AT+RSSI_GET		AT+RSSI_GET=[0:disable,1:enable]	AT+RSSI_GET=1\r\n	Get the signal value of the connection between the mobile phone and the module in real time. The signal value is automatically obtained once every 500 ms. This command will take effect only after the HID function is enabled.	Take effect immediately	No
AT+SLAVE_BIND_IO	**One-click Binding Command**	AT+SLAVE_BIND_IO=[0:disalbe,1:enable]	AT+SLAVE_BIND_IO=1\r\n	Enable the GPIO-02 button as the binding trigger. When GPIO-02 detects a low level for more than 30ms, it enters the binding mode. In the binding mode, the slave device will broadcast a fixed binding name. Note: GPIO-07 is low level when entering the binding state, and it returns to a high level after successful binding.	Take effect immediately	Save after power-down
AT+MASTER_BIND_IO		AT+MASTER_BIND_IO=[0:disalbe,1:enable]	AT+MASTER_BIND_IO=1\r\n	Enable the GPIO-21 button as a binding trigger. When the GPIO-21 detects a low level for more than 30ms, it enters binding mode. In binding mode, the master device will scan the specified broadcast name to connect, and save the device MAC as an automatic connection. Note: If the device has been bound to a device, the original device will be replaced when entering binding again. Note: GPIO-07 is low level when entering the binding state, and it returns to a high level after successful binding.	Take effect immediately	Save after power-down
AT+BIND		AT+BIND=<name>,<mac>	AT+BIND=RF CRAZY\r\n	Set the binding name to "RF CRAZY". If you press the device's GPIO-02, the device's broadcast name will immediately change to "RF CRAZY" until the connection is successful; if you press the device's GPIO-21, the device will scan for devices with a broadcast name of "RF CRAZY" and connect and save it as an automatic reconnection device. Note: If the binding is configured as a MAC address, pressing the slave device's GPIO-02 will be invalid. At this time, it will only take effect on the master device, that is, the master device can complete the binding in one direction. The default binding timeout is 30 seconds. During the binding process, make sure there are no extra Bluetooth devices around. Once the binding mode is entered, the master role will clear all the automatic reconnection devices that have been set.	Take effect immediately	Save after power-down

6 Operation example

Tools: PC serial port host computer, Android phone installed with nRF Connect APPs, CH340 or CP2102 USB to serial port tool.

Wiring method: The 3V3 pin of the serial port tool is connected to the VCC pin of the module, the GND pin of the serial port tool is connected to the GND pin of the module, the TX pin of the serial port tool is connected to the GPIO06 pin of the module (any GPIO06 pin of the module can be used), and the RX pin of the serial port is connected to the GPIO05 pin of the module (any GPIO05 pin of the module can be used).

6.1 Transparent Transmission

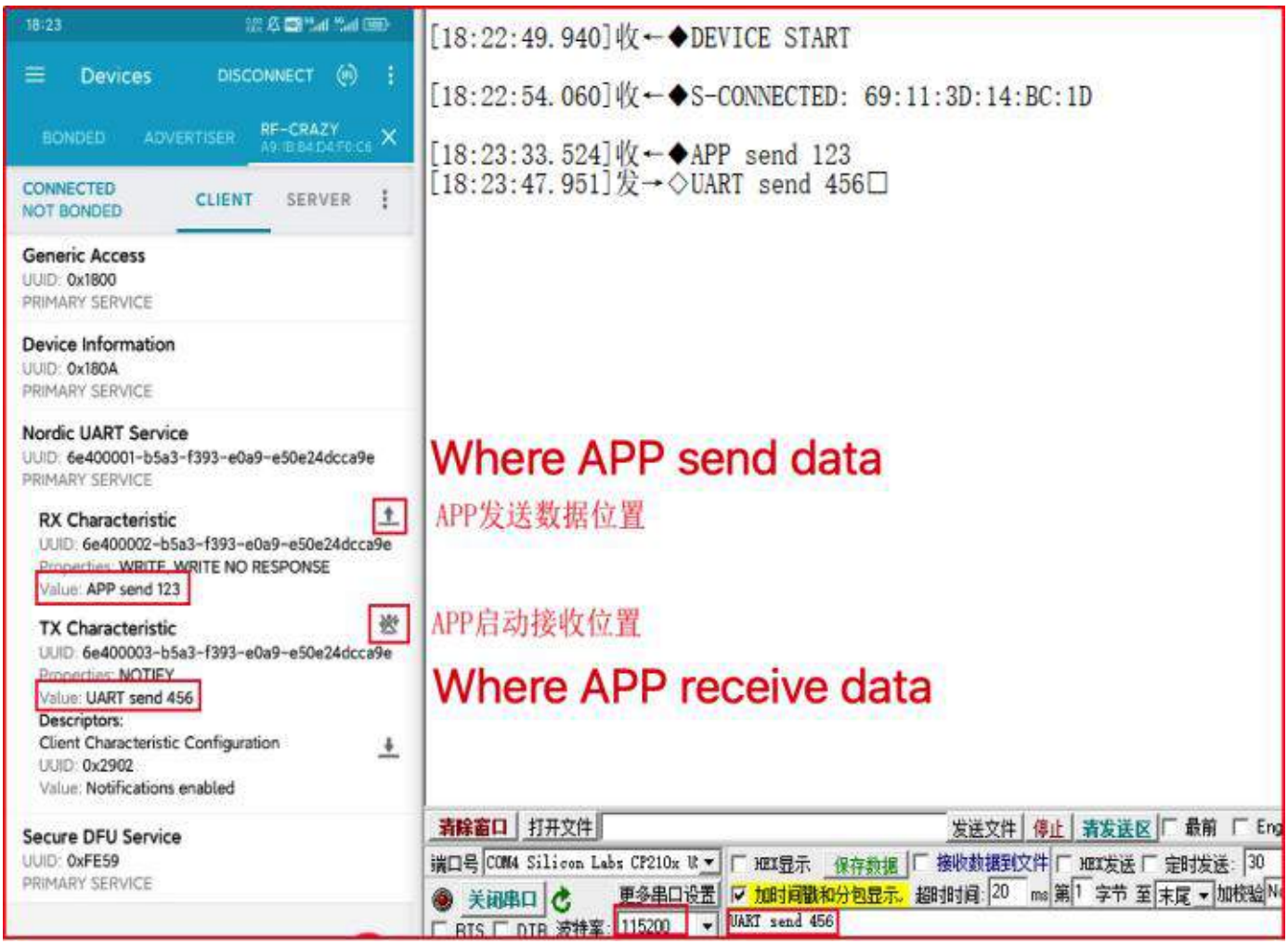

6.2 Beacon Setting

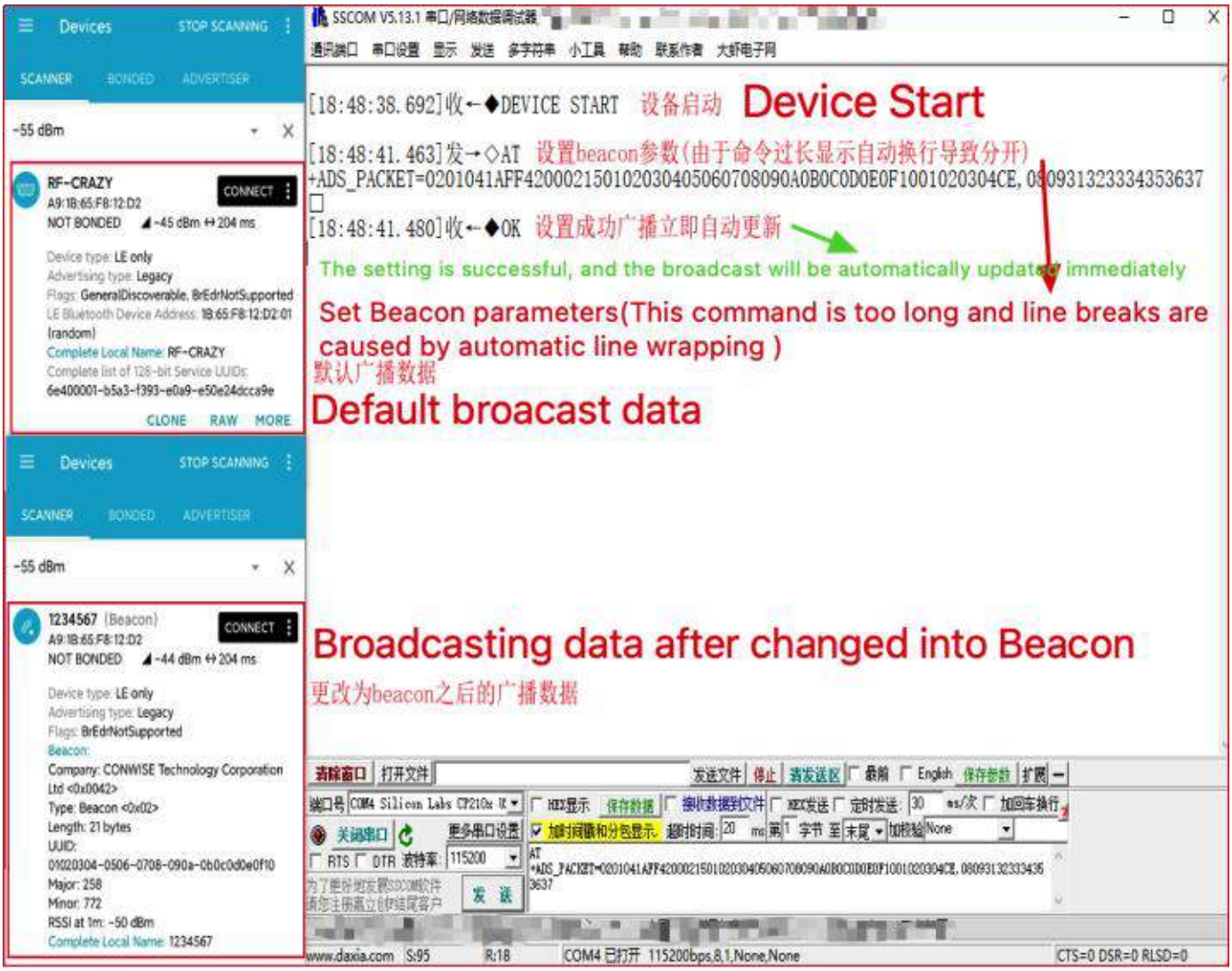

Note: Complete command "AT+ADS_PACKET=0201041AFF4200021501020304050607080 90A0B0C0D0E0F1001020304CE,0809313233343 53637\r\n".

6.3 The phone automatically connects when it is close to the Bluetooth module

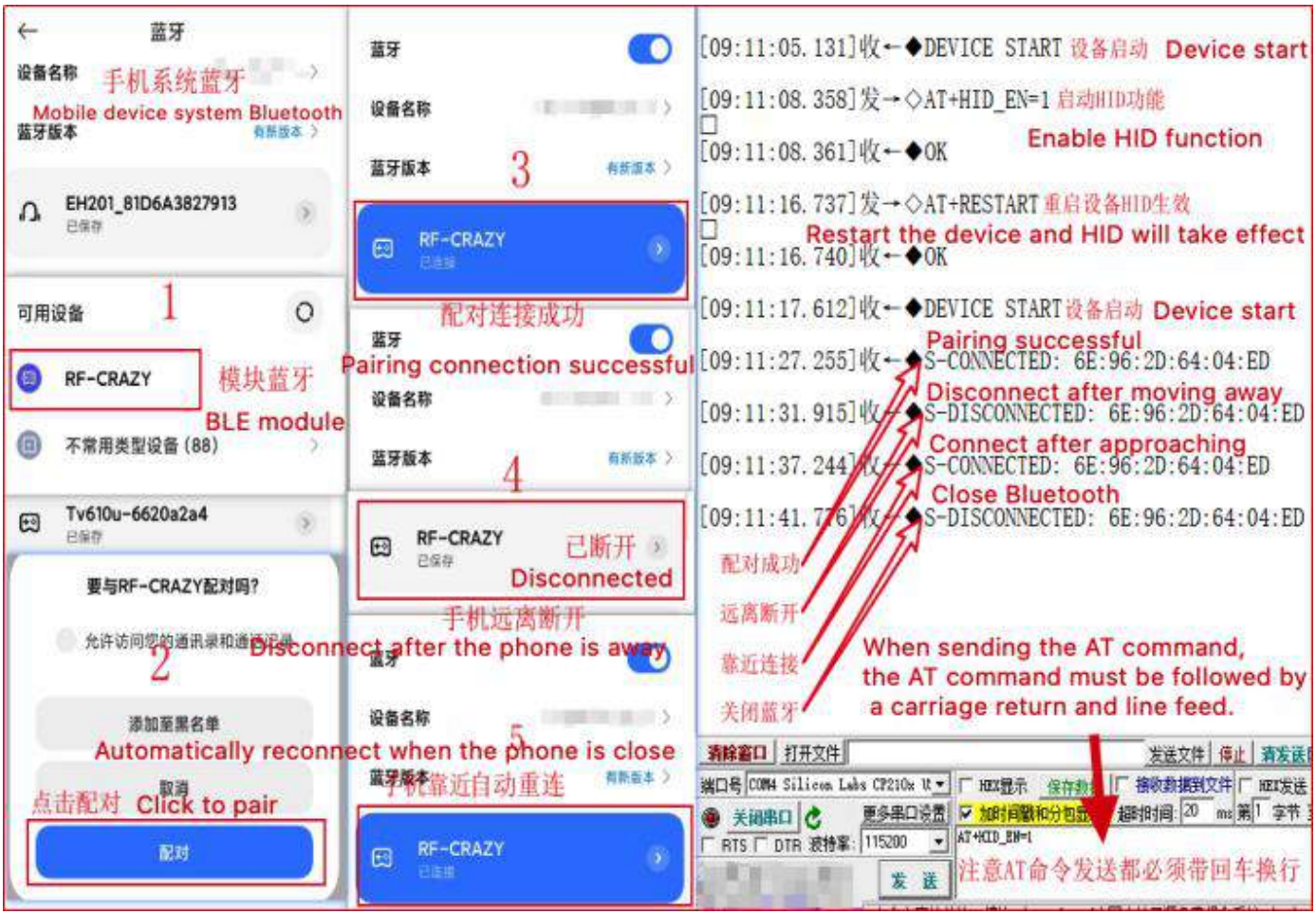

6.4 The module actively and automatically connects to the other module

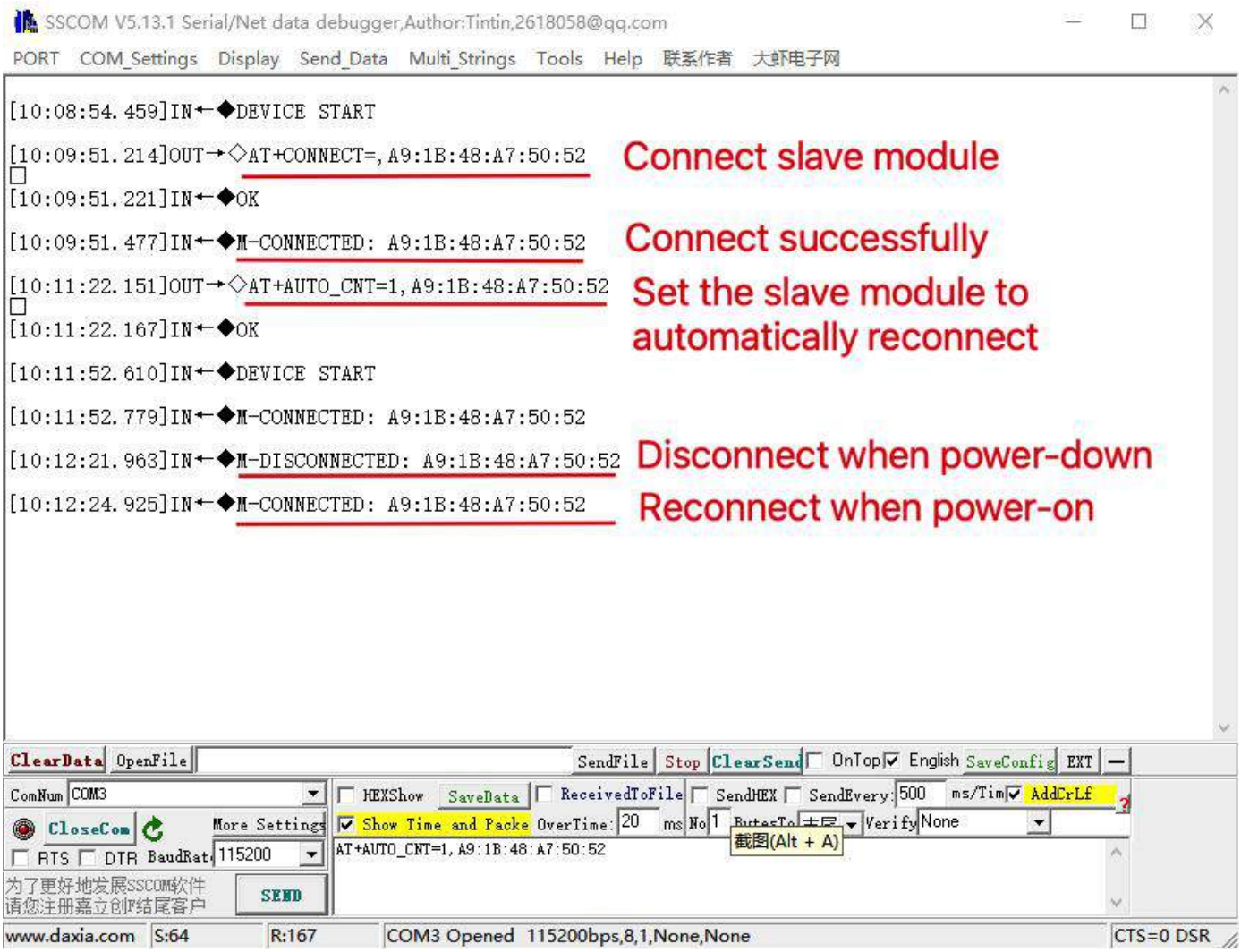

6.5 Direct drive IO and PWM control

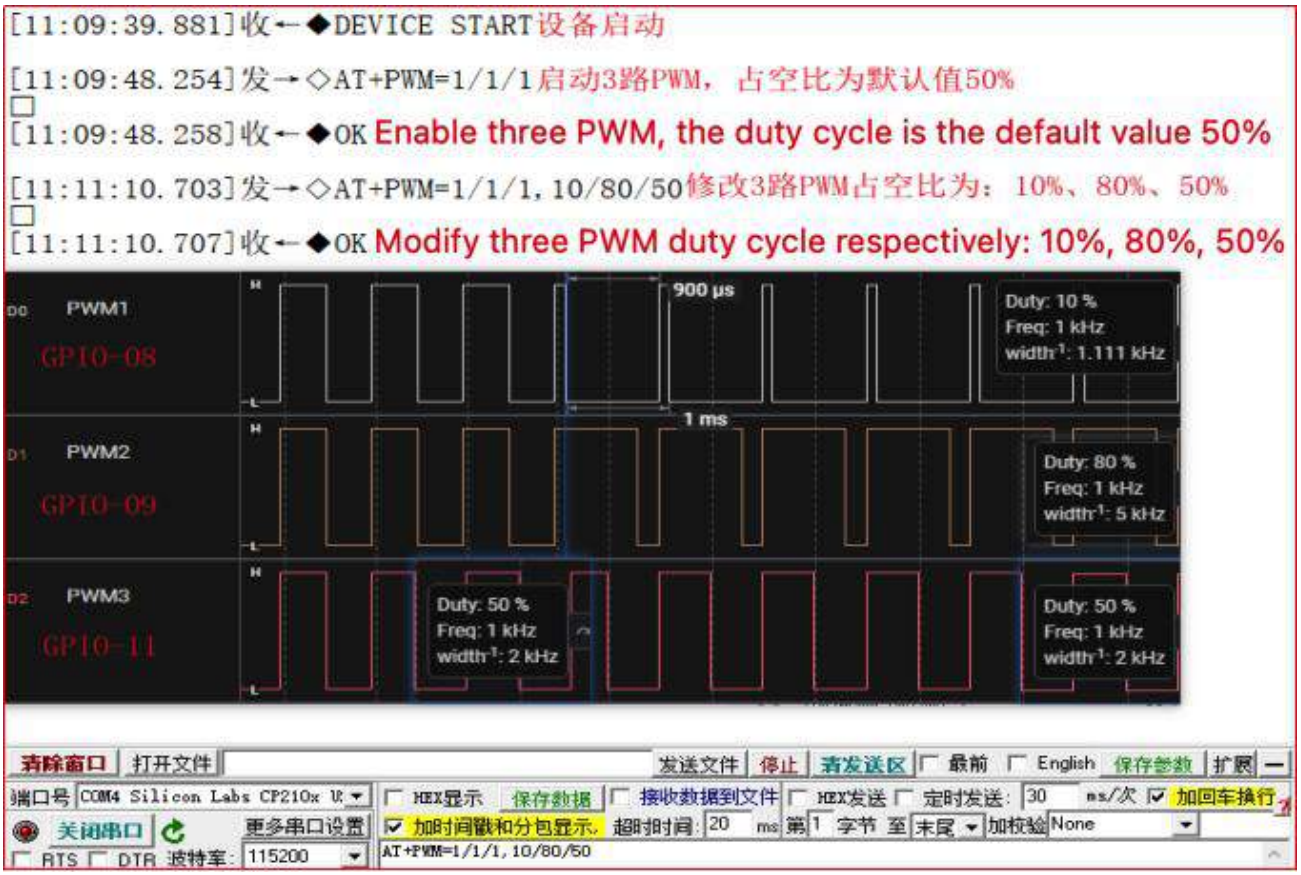

7 iOS APPs Programming Reference

The module is always broadcast as a slave, waiting for the mobile device to scan and connect as a master. The scanning and connection are usually completed by the APPs. Due to the particularity of the BLE protocol, there is no need to scan and connect Bluetooth LE devices in the system settings of the mobile device. Mobile devices are responsible for BLE connection, communication, disconnection, etc. Usually, it is implemented by the APPs.

Regarding BLE programming in iOS, the key point is the Read, Write, and enable notify switch to **Characteristic value (or called channel)**. To read and write in the channel can realize the direct control on the direct-drive mode functions of the module and no extra MCU is needed. Typical function descriptions are excerpted as follows:

```
/*!
 *  @method writeValue:forCharacteristic:withResponse:
 *  @param data The value to write.
 *  @param characteristic The characteristic on which to perform the write operation.
 *  @param type The type of write to be executed.
 *  @discussion Write the value of a characteristic.
 *      The passed data is copied and can be disposed of after the call finishes.
 *      The relevant delegate callback will then be invoked with the status of the request.
 *  @see peripheral:didWriteValueForCharacteristic:error:
 */
- (void)writeValue:(NSData *)data forCharacteristic:(CBCharacteristic *)characteristic type:(CBCharacteristicWriteTyp
e)type;
Note: Write a characteristic value.
NSData *d = [[NSData alloc] initWithBytes:&data length:mdata.length];
[p writeValue:d
 forCharacteristic:c
        type:CBCharacteristicWriteWithoutResponse];
/*!
 *  @method readValueForCharacteristic:
 *  @param characteristic The characteristic for which the value needs to be read.
 *  @discussion Fetch the value of a characteristic.
 *      The relevant delegate callback will then be invoked with the status of the request.
 *  @see peripheral:didUpdateValueForCharacteristic:error:
 */
- (void)readValueForCharacteristic:(CBCharacteristic *)characteristic;
Note: Read a characteristic value.
      [p readValueForCharacteristic:c];
```

```
/*!
 * @method setNotifyValue:forCharacteristic:
 * @param notifyValue The value to set the client configuration descriptor to.
 * @param characteristic The characteristic containing the client configuration.
 * @discussion Ask to start/stop receiving notifications for a characteristic.
 *     The relevant delegate callback will then be invoked with the status of the request.
 * @see peripheral:didUpdateNotificationStateForCharacteristic:error:
 */
- (void)setNotifyValue:(BOOL)notifyValue forCharacteristic:(CBCharacteristic *)characteristic;
```

Note: Turn on the characteristic value notify enable switch.

```
    [self setNotifyValue:YES forCharacteristic:c];//Open notify enable switch
    [self setNotifyValue:NO forCharacteristic:c]; //Close notify enable switch
/*
 * @method didUpdateValueForCharacteristic
 * @param peripheral Pheripheral that got updated
 * @param characteristic Characteristic that got updated
 * @error error Error message if something went wrong
 * @discussion didUpdateValueForCharacteristic is called when CoreBluetooth has updated a characteristic for a pe
ripheral. All reads and notifications come here to be processed.
 *
 */
- (void)peripheral:(CBPeripheral *)peripheral didUpdateValueForCharacteristic:(CBCharacteristic *)characteristic erro
r:(NSError *)error
```

Note: After each read operation, this callback function will be executed. The application layer saves the read data in this function.

8 MCU Reference Code

```
void main(void)
{
	//Wait for the BLE module to start successfully
	while (!memcmp(mcu_uart_read_data(),“WAKE UP\r\n”,strlen(“WAKE UP\r\n”))) {
		mcu_uart_send_data(“this data for wake up ble mode,at least 30 bytes”);
	}

	//Delay 50 ms
	mcu_delay_ms(50);

	while (1) {
		//Print the data of the BLE module received by the serial port (the data comes from the remote connected
device)
		if (mcu_uart_get_data_len() > 0) {
			mcu_uart_log(mcu_uart_get_data(),mcu_uart_get_data_len());
		}

		//Delay 50 ms
		mcu_delay_ms(50);

		//Send data to the BLE module (the BLE module will transmit it to the remote connected device)
		mcu_send_data_to_ble_mode(“test data.”);
	}
}
```

8 Module Peripheral Recommended Reference Design

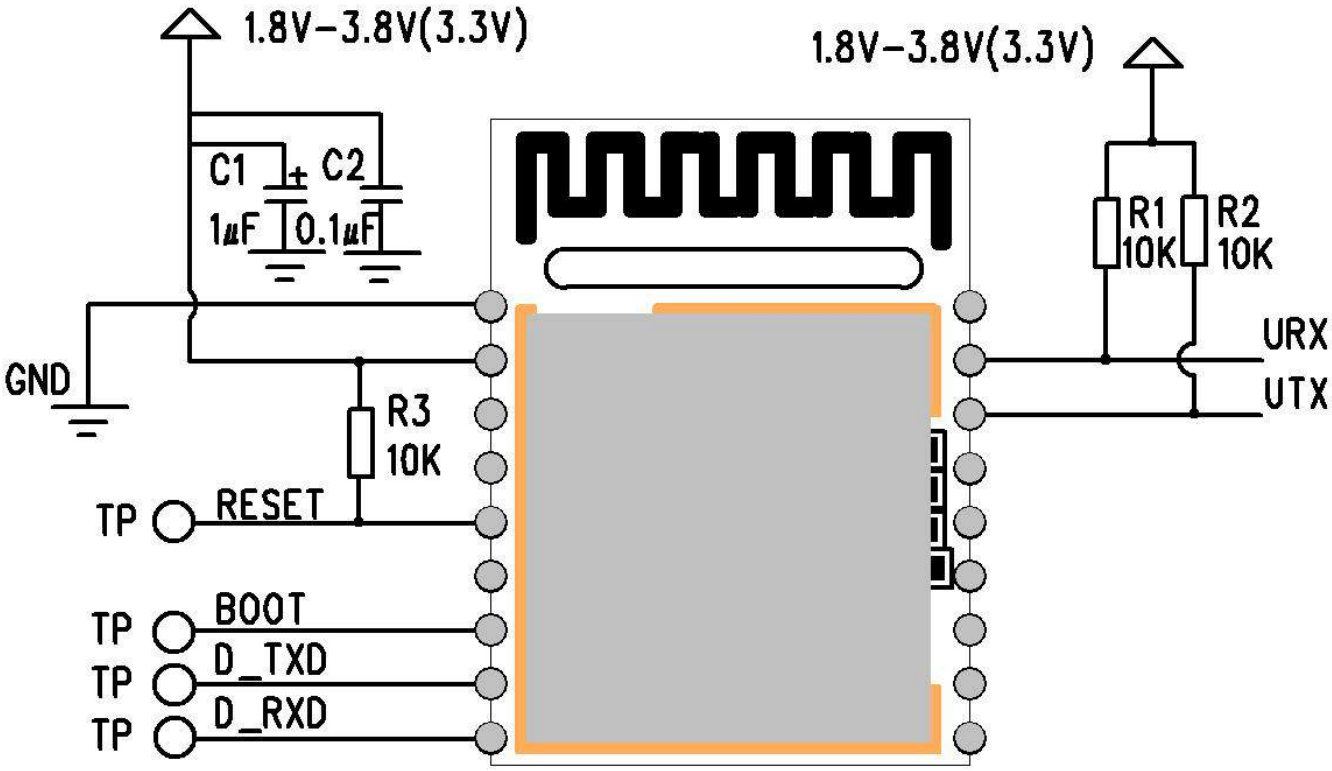

Figure 7. RC6626A Peripheral Recommended Reference Design

9 Mounting Suggestions

You can refer to the following references for the mounting design of the module with a PCB antenna (RC52832A with PCB Antenna).
For external antenna modules (RC52832AI needs to connect an external antenna to the IPEX connector), you need to refer to the external antenna design requirements.

Recommended module mounting example:

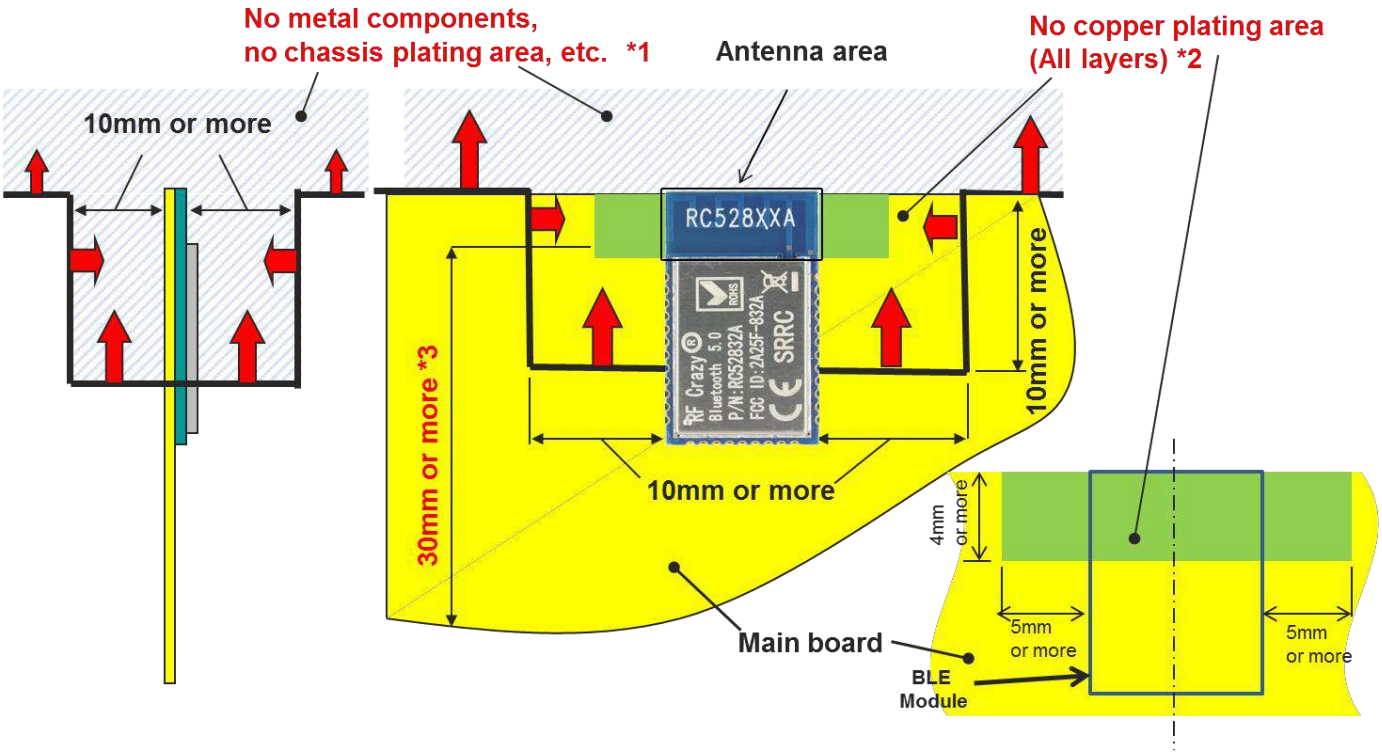

Figure 8. The Recommended module mounting example of RC52832A

- Please do not place any metal components in blue shaded space (*1), such as signal line and metal chassis as possible except for the main board while mounting the components in *1 space on the main board is allowed except for no copper plating area (*2).
- (*2) This area is routing the prohibited area on the main board. Please do not place copper on any layer.
- (*3) Characteristics may deteriorate when the GND pattern length is less than 30mm. It should be 30 mm or more as possible.
- For the best Bluetooth range performance, the antenna area of the module shall extend 3 mm outside the edge of the main board, or 3 mm outside the edge of a ground plane. The ground plane shall be at least 5 mm from the edge of the antenna area of the module.
- All module GND pins MUST be connected to the main board GND. Place GND vias as close to module GND pads as possible. Unused PCB area on the surface layer can flooded with copper but place GND vias regularly to connect copper flood to the inner GND plane. If GND floods the copper underside the module then connects with GND vias to the inner GND plane.
- Even when above mentioned condition is satisfied, communication performance may significantly deteriorate depending on the structure of the product. Bluetooth range performance is degraded if a module is placed in the middle of the main board.

- For main board layout:
  - Avoid running any signal line below the module whenever possible.
  - No ground plane below the antenna.
  - If possible, cut off the portion of the main board below the antenna.

Other module mounting examples:

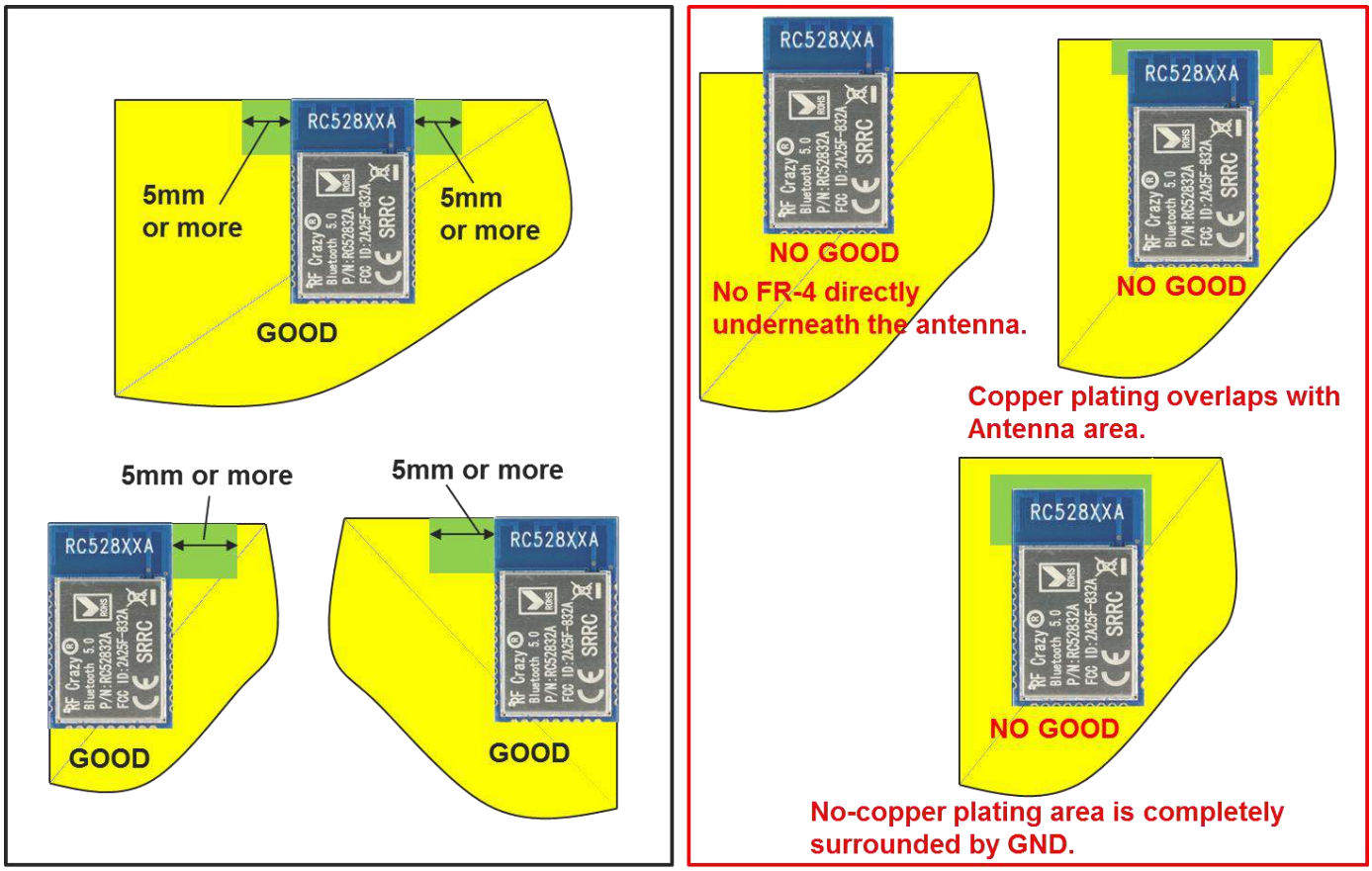

Figure 9. The other module mounting examples of RC52832A

Placement of resin or plastic parts:

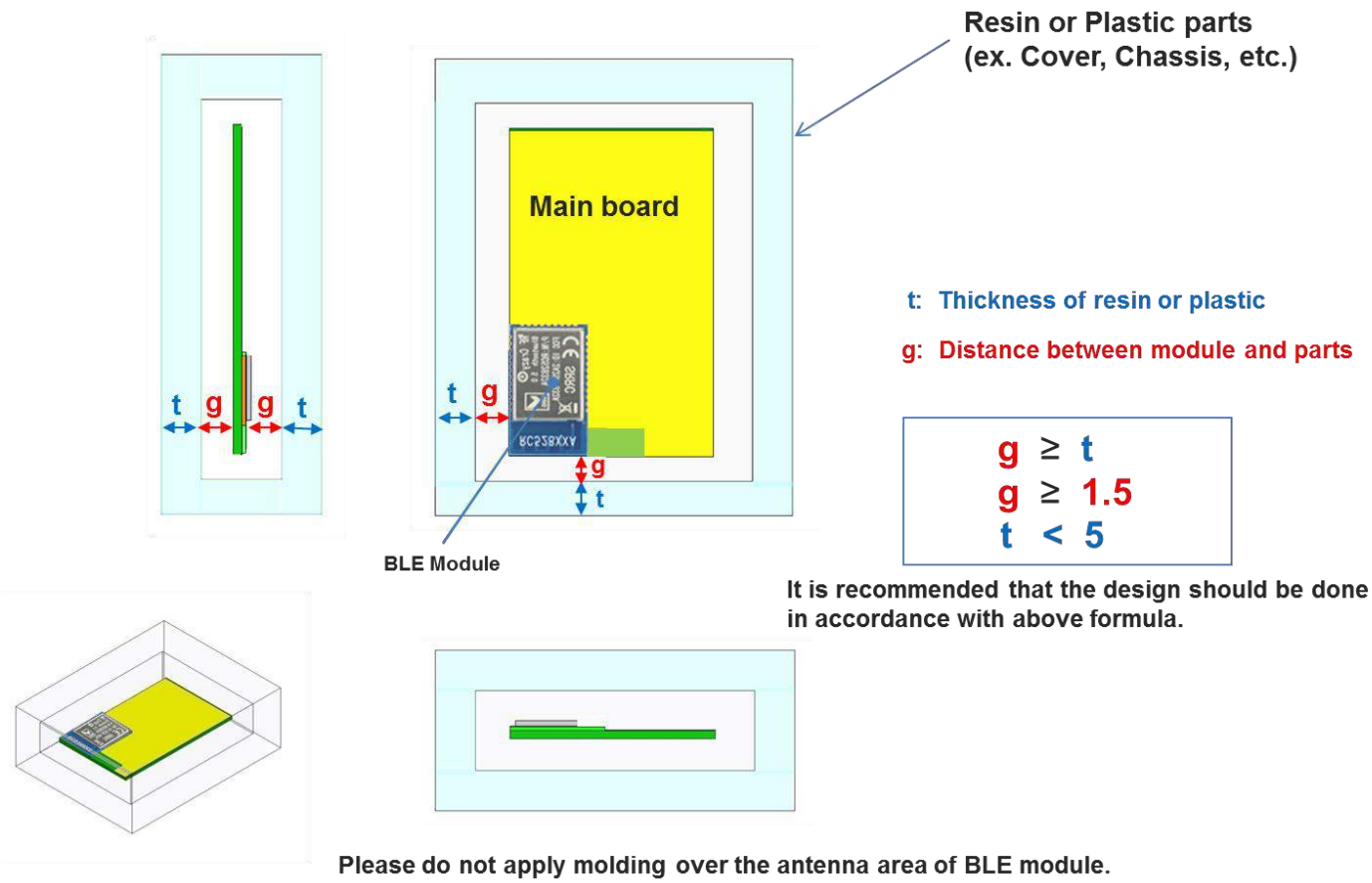

Figure 10. The Placement of resin or plastic parts of RC52832A

Placement of metal parts

- The minimum safe distance for metal parts without seriously compromising the antenna (tuning) is 40 mm top/bottom and 30 mm left or right.
- Metal close to the module antenna (bottom, top, left, right, any direction) will have degradation on the antenna performance. The amount of that degradation is entirely system-dependent, meaning you will need to perform some testing with your host application.
- Any metal closer than 20 mm will begin to significantly degrade performance (S11, gain, radiation efficiency).
- It is best that you test the range with a mock-up (or actual prototype) of the product to assess the effects of enclosure height (and materials, whether metal or plastic).

10 Cautions

10.1 Reflow Soldering

- Heating method: Conventional convection or IR convection
- Temperature measurement: Thermocouple d = 0.1 mm to 0.2 mm CA (K) or CC (T) at soldering portion or equivalent method
- Solder paste composition: SAC305
- Allowable reflow soldering times: 2 times based on the reflow soldering profile (see Figure 11)
- Temperature profile: Reflow soldering will be done according to the temperature profile (see Figure 11)
- Peak temperature: 260°C

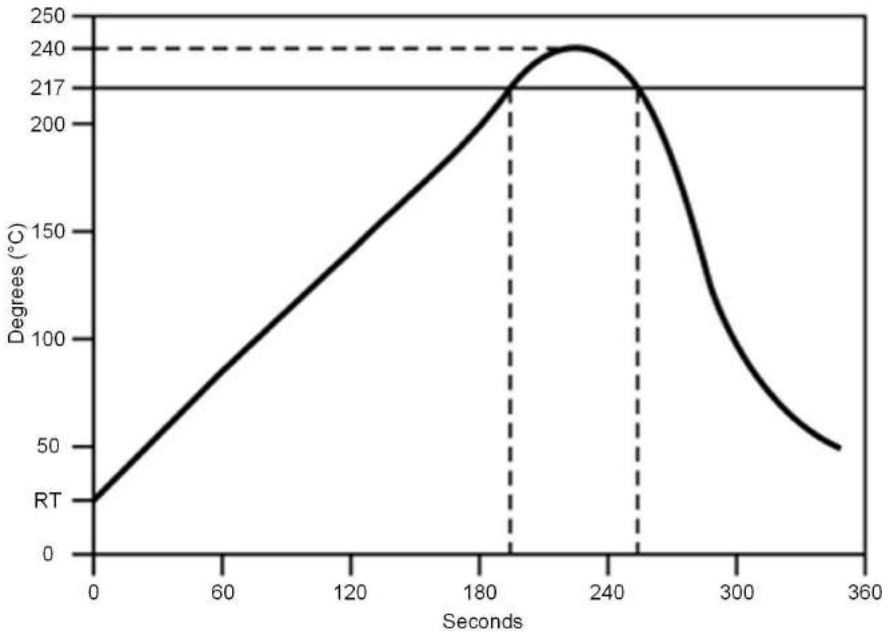

Figure 11. Temperature Profile for Evaluation of Solder Heat Resistance of a Component (at Solder Joint)

Table 6. Temperature Profile

Profile Elements	Convection or IR(1)
Peak temperature range	235 to 240 °C typical (260 °C maximum)
Pre-heat / soaking (150 to 200 °C)	60 to 120 seconds
Time above the melting point	60 to 90 seconds
Time with 5 °C to peak	30 seconds maximum
Ramp up	< 3 °C / second
Ramp down	< -6 °C / second

(1) For details, refer to the solder paste manufacturer's recommendation.

10.2 Usage Condition Notes

- Follow the conditions written in this specification, especially the recommended condition ratings about the power supply applied to this product.
- The supply voltage has to be free of AC ripple voltage (for example from a battery or a low noise regulator output). For noisy supply voltages, provide a decoupling circuit (for example a ferrite in series connection and a bypass capacitor to ground of at least 47uF directly at the module).
- Take measures to protect the unit against static electricity. If pulses or other transient loads (a large load applied in a short time) are applied to the products, check and evaluate their operation before assembly on the final products.
- The supply voltage should not be exceedingly high or reversed. It should not carry noise and/or spikes.
- This product is away from other high-frequency circuits.
- Keep this product away from heat. Heat is the major cause of decreasing the life of these products.
- Avoid assembly and use of the target equipment in conditions where the products' temperature may exceed the maximum tolerance.
- This product should not be mechanically stressed when installed.
- Do not use dropped products.
- Do not touch, damage, or soil the pins.
- Pressing on parts of the metal shield or fastening objects to the metal shield will cause damage.

10.3 Storage Notes

- The module should not be stressed mechanically during storage.
- Do not store these products in the following conditions or the performance characteristics of the product, such as RF performance will be adversely affected:
  - Storage in salty air or an environment with a high concentration of corrosive gas
  - Storage in direct sunlight
  - Storage in an environment where the temperature may be outside the range specified
  - Storage of the products for more than one year after the date of delivery storage period
- Keep this product away from water, poisonous gas, and corrosive gas.
- This product should not be stressed or shocked when transported.

10.4 Optional Packaging

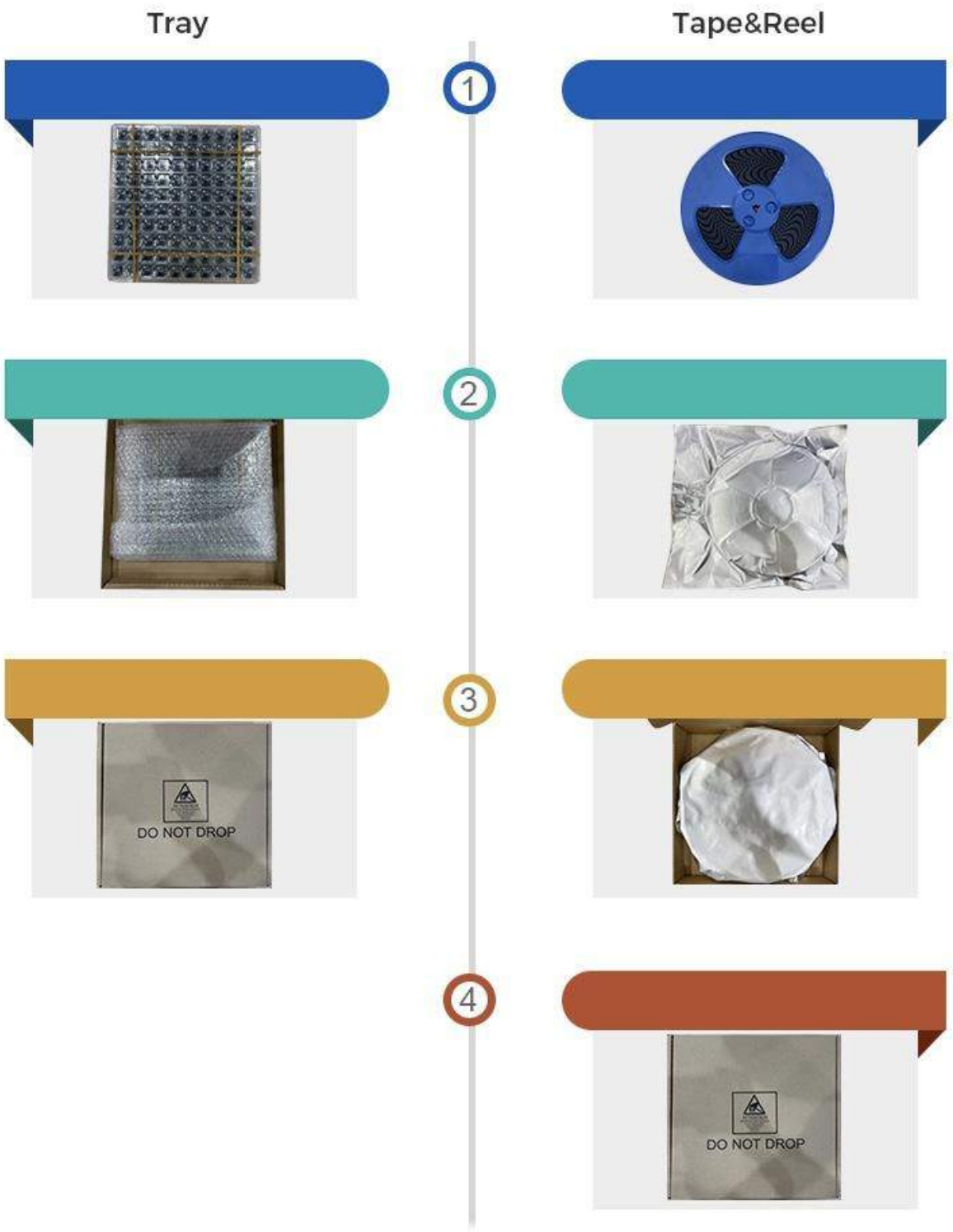

Figure 12. Optional Packaging Mode

Note: Default tray packaging.

11 Revision History

Date	Version No.	Description	Author
20240611	V1.1.0	The initial version is released.	Wonbs
20240815	V1.1.1	Update module parameters.	Wonbs

Note:

1. The document will be optimized and updated from time to time. Before using this document, please make sure it is the latest version.
2. To obtain the latest document, please download it from the official website: www.rfcrazy.com.

12 Contact Us

SHENZHEN RFCRAZY TECHNOLOGY CO., LTD.

Web: www.rfcrazy.com

Email: sales@rfcrazy.com

Add: Room 332, Block A, Huayuan Technology&Invonation Park, Baoyuan Road, Baoan District, Shenzhen, Guangdong, P.R.C 518101

FCC WARNING

FCC Caution: Any changes or modifications not expressly approved by the party responsible for compliance could void the user's authority to operate this equipment.

This device complies with Part 15 of the FCC Rules.

Operation is subject to the following two conditions: (1) This device may not cause harmful interference, and (2) this device must accept any interference received, including interference that may cause undesired operation.

This device and its antenna(s) must not be co-located or operating in conjunction with any other antenna or transmitter.

15.105 Information to the user.

(b) For a Class B digital device or peripheral, the instructions furnished the user shall include the following or similar statement, placed in a prominent location in the text of the manual:

Note: This equipment has been tested and found to comply with the limits for a Class B digital device, pursuant to part 15 of the FCC Rules. These limits are designed to provide reasonable protection against harmful interference in a residential installation. This equipment generates, uses and can radiate radio frequency energy and, if not installed and used in accordance with the instructions, may cause harmful interference to radio communications. However, there is no guarantee that interference will not occur in a particular installation. If this equipment does cause harmful interference to radio or television reception, which can be determined by turning the equipment off and on, the user is encouraged to try to correct the interference by one or more of the following measures:

—Reorient or relocate the receiving antenna.

—Increase the separation between the equipment and receiver.

—Connect the equipment into an outlet on a circuit different from that to which the receiver is connected.

—Consult the dealer or an experienced radio/TV technician for help.

This equipment complies with FCC radiation exposure limits set forth for an uncontrolled environment. This equipment should be installed and operated with minimum distance 20 cm between the radiator and your body.

Radiation Exposure Statement:

This equipment complies with FCC radiation exposure limits set forth for an uncontrolled environment.

This transmitter must not be co-located or operating in conjunction with any other

antenna or transmitter.
The availability of some specific channels and/or operational frequency bands are country dependent and are firmware programmed at the factory to match the intended destination.
The firmware setting is not accessible by the end user.
The final end product must be labelled in a visible area with the following:
“Contains Transmitter Module 2BOIC-RC6626A”

The module can be used for Bluetooth Module with 1.06 dBi antenna.
The host manufacturer installing this module into their product must ensure that the final compost product complies with the FCC requirements by a technical assessment or evaluation to provide information to the end user regarding how to install or remove this RF module in the user's manual of the end product which integrates this module. The end user manual shall include all required regulatory information/warming as show in this manual.

Requirement per KDB996369 D03

2.2 List of applicable FCC rules

List the FCC rules that are applicable to the modular transmitter. These are the rules that specifically establish the bands of operation, the power, spurious emissions, and operating fundamental frequencies. DO NOT list compliance to unintentional-radiator rules (Part 15 Subpart B) since that is not a condition of a module grant that is extended to a host manufacturer. See alsoSection 2.10 below concerning the need to notify host manufacturers that further testing is required.3

Explanation: This module meets the requirements of FCC part 15C (15.247).itSpecifically identified AC Power Line Conducted Emission,Radiated Spurious emissions,Band edge and RF Conducted Spurious Emissions,Conducted Peak Output Power,Bandwidth,Power Spectral Density,Antenna Requirement.

Summarize the specific operational useconditions

Describe use conditions that are applicable to the modular transmitter, including for example any limits on antennas, etc. For example, if point-to-point antennas are used that require reduction in power or compensation for cable loss, then this information must be in the instructions. If the use condition limitations extend to professional users, then instructions must state that this information also extends to the host manufacturer's instruction manual. In addition, certain information may also be needed, such as peak gain per frequency band and minimum gain, specifically for master devices in 5 GHz DFS bands.

Explanation: The EUT has one PCB antenna, the antenna can't be replaced by other authorized antennas, and the gain of each replacement antenna is no more than 1.06dBi

2.3 Single module procedures

If a modular transmitter is approved as a "single module," then the module manufacturer isresponsible for approving the host environment that the single module is used with. The manufacturer of a single module must describe, both in the filing and in the installation instructions, the alternative means that the single module manufacturer uses to verify that the host meets the necessary requirements to satisfy the module limiting conditions.

A single module manufacturer has the flexibility to define its alternative method to address the conditions that limit the initial approval, such as: shielding, minimum signaling amplitude, buffered modulation/data inputs, or power supply regulation. The alternative method could include that the single

module manufacturer reviews detailed test data or host designs prior to giving the host manufacturer approval.
This single procedure is also applicable for RF exposure evaluation when it is necessary to demonstrate compliance in a specific host. The module manufacturer must state how control of the product into which the modular transmitter will be installed will be maintained such that full compliance of the product is always ensured. For additional hosts other than the specific host originally granted with a single module, a Class II permissive change is required on the module grant to register the additional host as a specific host also approved with the module.
Explanation: The module is a single module.

2.6 RF exposure considerations

It is essential for module grantees to clearly and explicitly state the RF exposure conditions that permit a host product manufacturer to use the module. Two types of instructions are required for RF exposure information: (1) to the host product manufacturer, to define the application conditions (mobile, portable – xx cm from a person's body); and (2) additional text needed for the host product manufacturer to provide to end users in their end-product manuals. If RF exposure statements and use conditions are not provided, then the host product manufacturer is required to take responsibility of the module through a change in FCC ID (new application).

Explanation: This module complies with FCC RF radiation exposure limits set forth for an uncontrolled environment, This equipment should be installed and operated with a minimum distance of 20cm between the radiator and your body." This module is designed to comply with the FCC statement, FCC ID is: 2BOIC-RC6626A.

2.7 Antennas

A list of antennas included in the application for certification must be provided in the instructions. For modular transmitters approved as single modules, all applicable professional installer instructions must be included as part of the information to the host product manufacturer. The antenna list shall also identify the antenna types (monopole, PIFA, dipole, etc. (note that for example an "omni-directional antenna" is not considered to be a specific "antenna type")).
For situations where the host product manufacturer is responsible for an external connector, for example with an RF pin and antenna trace design, the integration instructions shall inform the installer that unique antenna connector must be used on the Part 15 authorized transmitters used in the host product.

The module manufacturers shall provide a list of acceptable unique connectors.

Explanation: The EUT has one PCB antenna, the antenna can't be replaced by other authorized antennas, and the gain of each replacement antenna is no more than 1.06dBi

2.8 Label and compliance information

Grantees are responsible for the continued compliance of their modules to the FCC rules. This
includes advising host product manufacturers that they need to provide a physical or e-label stating “Contains FCC ID” with their finished product. See Guidelines for Labeling and User Information for RF Devices – KDB Publication 784748.

Explanation: The host system using this module, should have label in a visible area indicated the following texts: "Contains FCC ID: 2BOIC-RC6626A.

2.9 Information on test modes and additional testing requirements5

Additional guidance for testing host products is given in KDBPublication 996369 D04 Module Integration Guide. Test modes should take into consideration different operational conditions for a stand-alone modular transmitter in a host, as well as for multiple simultaneously transmitting modules or other transmitters in a host product.

The grantee should provide information on how to configure test modes for host product evaluation for different operational conditions for a stand-alone modular transmitter in a host, versus with multiple, simultaneously transmitting modules or other transmitters in a host.

Grantees can increase the utility of their modular transmitters by providing special means, modes, or instructions that simulates or characterizes a connection by enabling a transmitter. This can greatly simplify a host manufacturer’s determination that a module as installed in a host complies with FCC requirements.

Explanation: **Hangzhou Soundlive Electronic Co., Ltd.**
can increase the utility of our modular transmitters by providing instructions that simulates or characterizes a connection by enabling a transmitter.

2.10 Additional testing, Part 15 Subpart Bdisclaimer

The grantee should include a statement that the modular transmitter is only FCC authorized for the specific rule parts (i.e., FCC transmitter rules) listed on the grant, and that the host product manufacturer is responsible for compliance to any other FCC rules that apply to the host not covered by the modular transmitter grant of certification. If the grantee markets their product

as being Part 15
Subpart B compliant (when it also contains unintentional-radiator digital circuity), then the grantee shall provide a notice stating that the final host product still requires Part 15 Subpart B compliance testing with the modular transmitter installed.

Explanation: The module without unintentional-radiator digital circuity, so the module does not require an evaluation by FCC Part 15 Subpart B. The host shoule be evaluated by the FCC Subpart B.

OEM integration instructions:
This device is intended only for OEM integrators under the following conditions:

The transmitter module may not be co-located with any other transmitter or antenna. The module shall be only used with the external antenna(s) that has been originally tested and certified with this module.

As long as the conditions above are met, further transmitter test will not be required. However, the OEM integrator is still responsible for testing their end-product for any additional compliance requirements required with this module installed (for example, digital device emissions, PC peripheral requirements, etc.).

Validity of using the module certification:
In the event that these conditions cannot be met (for example certain laptop configurations or co-location with another transmitter), then the FCC authorization for this module in combination with the host equipment is no longer considered valid and the FCC ID of the module cannot be used on the final product. In these circumstances, the OEM integrator will be responsible for re-evaluating the end product (including the transmitter) and obtaining a separate FCC authorization.

End product labeling:
The final end product must be labeled in a visible area with the following: “Contains Transmitter Module FCC ID: 2BOIC-RC6626A”.

Information that must be placed in the end user manual:
The OEM integrator has to be aware not to provide information to the end user regarding how to install or remove this RF module in the user's manual of the end product which integrates this module. The end user manual shall include all required regulatory information/warning as show in this manual.