# TEST REPORT

| | |
|---|---|
| Report No.: | BCTC2503238374E |
| Applicant: | Shenzhen Xirui Network Technology Co., Ltd |
| Product Name: | Language Translator Device |
| Test Model: | E-Translator |
| Tested Date: | 2025-03-11 to 2025-03-18 |
| Issued Date: | 2025-03-19 |

**Shenzhen BCTC Testing Co., Ltd.**

# FCC ID: 2BOIGE-TRANSLATOR

| | |
|---|---|
| Product Name: | Language Translator Device |
| Trademark: | N/A |
| Model/Type reference: | E-Translator |
| Prepared For: | Shenzhen Xirui Network Technology Co., Ltd |
| Address: | Dalang Street Taoyuan Community Zhongxin Road Huiyi Building 401 Shenzhen Longhua District Guangdong, 518109, China |
| Manufacturer: | Shenzhen Xirui Network Technology Co., Ltd |
| Address: | Dalang Street Taoyuan Community Zhongxin Road Huiyi Building 401 Shenzhen Longhua District Guangdong, 518109, China |
| Prepared By: | Shenzhen BCTC Testing Co., Ltd. |
| Address: | 1-2/F., Building B, Pengzhou Industrial Park, No.158, Fuyuan 1st Road, Zhancheng, Fuhai Subdistrict, Bao'an District, Shenzhen, Guangdong, China. |
| Sample Received Date: | 2025-03-11 |
| Sample tested Date: | 2025-03-11 to 2025-03-18 |
| Issue Date: | 2025-03-19 |
| Report No.: | BCTC2503238374E |
| Test Standards: | FCC Part15.247<br>ANSI C63.10-2013 |
| Test Results: | PASS |
| Remark: | This is Bluetooth BLE radio test report. |

Tested by:

Lei Chen

Lei Chen/Project Handler

Approved by:

Zero Zhou/Reviewer

The test report is effective only with both signature and specialized stamp. This result(s) shown in this report refer only to the sample(s) tested. Without written approval of Shenzhen BCTC Testing Co., Ltd, this report can't be reproduced except in full. The tested sample(s) and the sample information are provided by the client.

# Table Of Content

Test Report Declaration Page
1. Version ....5
2. Test Summary ....6
3. Measurement Uncertainty ....7
4. Product Information And Test Setup ....8
4.1 Product Information ....8
4.2 Test Setup Configuration ....8
4.3 Support Equipment ....9
4.4 Channel List ....9
4.5 Test Mode ....9
4.6 Table Of Parameters Of Text Software Setting ....10
5. Test Facility And Test Instrument Used ....11
5.1 Test Facility ....11
5.2 Test Instrument Used ....11
6. Conducted Emissions ....13
6.1 Block Diagram Of Test Setup ....13
6.2 Limit ....13
6.3 Test Procedure ....13
6.4 EUT Operating Conditions ....13
6.5 Test Result ....14
7. Radiated Emissions ....16
7.1 Block Diagram Of Test Setup ....16
7.2 Limit ....17
7.3 Test Procedure ....18
7.4 EUT Operating Conditions ....19
7.5 Test Result ....19
8. Radiated Band Emission Measurement And Restricted Bands Of Operation ....23
8.1 Block Diagram Of Test Setup ....23
8.2 Limit ....23
8.3 Test Procedure ....24
8.4 EUT operating Conditions ....24
8.5 Test Result ....25
9. Power Spectral Density Test ....26
9.1 Block Diagram Of Test Setup ....26
9.2 Limit ....26
9.3 Test Procedure ....26
9.4 EUT Operating Conditions ....26
9.5 Test Result ....27
10. Bandwidth Test ....30
10.1 Block Diagram Of Test Setup ....30
10.2 Limit ....30
10.3 Test Procedure ....30
10.4 EUT Operating Conditions ....30
10.5 Test Result ....31
11. Peak Output Power Test ....34

11.1 Block Diagram Of Test Setup....34
11.2 Limit....34
11.3 Test Procedure....34
11.4 EUT Operating Conditions....34
11.5 Test Result....34
12. 100 KHz Bandwidth Of Frequency Band Edge....35
12.1 Block Diagram Of Test Setup....35
12.2 Limit....35
12.3 Test Procedure....35
12.4 EUT Operating Conditions....35
12.5 Test Result....36
13. Antenna Requirement....41
13.1 Limit....41
13.2 Test Result....41
14. EUT Photographs....42
15. EUT Test Setup Photographs....43

(Note: N/A Means Not Applicable)

## 1. Version

| Report No. | Issue Date | Description | Approved |
|---|---|---|---|
| BCTC2503238374E | 2025-03-19 | Original | Valid |
| | | | |

## 2. Test Summary

The Product has been tested according to the following specifications:

| No. | Test Parameter | Clause No. | Results |
|---|---|---|---|
| 1 | Conducted Emission | 15.207 | PASS |
| 2 | 6dB Bandwidth | 15.247 (a)(2) | PASS |
| 3 | Peak Output Power | 15.247 (b) | PASS |
| 4 | Radiated Spurious Emission | 15.247 (d), 15.205 | PASS |
| 5 | Power Spectral Density | 15.247 (e) | PASS |
| 6 | Restricted Band of Operation | 15.205 | PASS |
| 7 | Band Edge (Out of Band Emissions) | 15.247(d) | PASS |
| 8 | Antenna Requirement | 15.203 | PASS |

## 3. Measurement Uncertainty

Where relevant, the following measurement uncertainty levels have been estimated for tests performed on the Product as specified in CISPR 16-4-2. This uncertainty represents an expanded uncertainty expressed at approximately the 95% confidence level using a coverage factor of k=2.

| No. | Item | Uncertainty |
|---|---|---|
| 1 | 3m chamber Radiated spurious emission(9kHz-30MHz) | U=3.7dB |
| 2 | 3m chamber Radiated spurious emission(30MHz-1GHz) | U=4.3dB |
| 3 | 3m chamber Radiated spurious emission(1GHz-18GHz) | U=4.5dB |
| 4 | 3m chamber Radiated spurious emission(18GHz-40GHz) | U=3.34dB |
| 5 | Conducted Emission(150kHz-30MHz) | U=3.20dB |
| 6 | Conducted Adjacent channel power | U=1.38dB |
| 7 | Conducted output power uncertainty Above 1G | U=1.576dB |
| 8 | Conducted output power uncertainty below 1G | U=1.28dB |
| 9 | humidity uncertainty | U=5.3% |
| 10 | Temperature uncertainty | U=0.59℃ |

# 4. Product Information And Test Setup

## 4.1 Product Information

| | |
|---|---|
| Model/Type reference: | E-Translator |
| Model differences: | N/A |
| Hardware Version: | N/A |
| Software Version: | N/A |
| Operation Frequency: | 2402-2480MHz |
| Type of Modulation: | GFSK |
| Data Rate: | 1Mbps |
| Number Of Channel | 40CH |
| Antenna installation: | PCB antenna |
| Antenna Gain: | 1.85 dBi<br>Remark:<br>☒ The antenna gain of the product comes from the antenna report provided by the customer, and the test data is affected by the customer information.<br>☐ The antenna gain of the product is provided by the customer, and the test data is affected by the customer information. |
| Ratings: | DC 5V from USB, DC 3.7V from battery |

## 4.2 Test Setup Configuration

See test photographs attached in *EUT TEST SETUP PHOTOGRAPHS* for the actual connections between Product and support equipment.

## 4.3 Support Equipment

| No. | Device Type | Brand | Model | Series No. | Note |
|---|---|---|---|---|---|
| E-1 | Language Translator | N/A | E-Translator | N/A | EUT |
| E-2 | Adapter | N/A | CD289 | N/A | Auxiliary |

| Item | Shielded Type | Ferrite Core | Length | Note |
|---|---|---|---|---|
| C-1 | NO | NO | 0.3M | DC cable unshielded |

***Notes:***
1. All the equipment/cables were placed in the worst-case configuration to maximize the emission during the test.
2. Grounding was established in accordance with the manufacturer's requirements and conditions for the intended use.

## 4.4 Channel List

| Channel List | | | | | |
|---|---|---|---|---|---|
| **Channel** | **Frequency (MHz)** | **Channel** | **Frequency (MHz)** | **Channel** | **Frequency (MHz)** |
| 01 | 2402 | 11 | 2422 | 21 | 2442 |
| 02 | 2404 | 12 | 2424 | 22 | 2444 |
| 03 | 2406 | 13 | 2426 | 23 | 2446 |
| ~ | ~ | ~ | ~ | ~ | ~ |
| 09 | 2418 | 19 | 2438 | 39 | 2478 |
| 10 | 2420 | 20 | 2440 | 40 | 2480 |

## 4.5 Test Mode

To investigate the maximum EMI emission characteristics generates from EUT, the test system was pre-scanning tested base on the consideration of following EUT operation mode or test configuration mode which possible have effect on EMI emission level. Each of these EUT operation mode(s) or test configuration mode(s) mentioned above was evaluated respectively.

| For All Mode | Description | Modulation Type |
|---|---|---|
| Mode 1 | CH01 | GFSK |
| Mode 2 | CH20 | |
| Mode 3 | CH40 | |
| Mode 4 | Charging+ BLE Linking (Conducted emission & Radiated emission) | |

Note:
(1) The measurements are performed at the highest, middle, lowest available channels.
(2) Fully-charged battery is used during the test

## 4.6 Table Of Parameters Of Text Software Setting

During testing channel & power controlling software provided by the customer was used to control the operating channel as well as the output power level. The RF output power selection is for the setting of RF output power expected by the customer and is going to be fixed on the firmware of the final end product power parameters

| **Test software Version** | **BK RF Test_V1.8** | | |
|---|---|---|---|
| Frequency | 2402 MHz | 2440 MHz | 2480 MHz |
| Parameters | DEF | DEF | DEF |

# 5. Test Facility And Test Instrument Used

## 5.1 Test Facility

All measurement facilities used to collect the measurement data are located at Shenzhen BCTC Testing Co., Ltd. Address: 1-2/F., Building B, Pengzhou Industrial Park, No.158, Fuyuan 1st Road, Zhancheng, Fuhai Subdistrict, Bao'an District, Shenzhen, Guangdong, China. The site and apparatus are constructed in conformance with the requirements of ANSI C63.4 and CISPR 16-1-1 other equivalent standards.
FCC Test Firm Registration Number: 712850
A2LA certificate registration number is: CN1212
ISED Registered No.: 23583
ISED CAB identifier: CN0017

## 5.2 Test Instrument Used

| Conducted Emissions Test | | | | | |
|---|---|---|---|---|---|
| **Equipment** | **Manufacturer** | **Model#** | **Serial#** | **Last Cal.** | **Next Cal.** |
| Receiver | R&S | ESR3 | 102075 | May 16, 2024 | May 15, 2025 |
| LISN | R&S | ENV216 | 101375 | May 16, 2024 | May 15, 2025 |
| Software | Frad | EZ-EMC | EMC-CON 3A1 | \ | \ |
| Pulse limiter | Schwarzbeck | VTSD9561-F | 01323 | May 16, 2024 | May 15, 2025 |

| RF Conducted Test | | | | | |
|---|---|---|---|---|---|
| **Equipment** | **Manufacturer** | **Model#** | **Serial#** | **Last Cal.** | **Next Cal.** |
| Power meter | Keysight | E4419 | \ | May 16, 2024 | May 15, 2025 |
| Power Sensor (AV) | Keysight | E9300A | \ | May 16, 2024 | May 15, 2025 |
| Signal Analyzer20kHz-26.5GHz | Keysight | N9020A | MY49100060 | May 16, 2024 | May 15, 2025 |
| Spectrum Analyzer9kHz-40GHz | R&S | FSP40 | 100363 | May 16, 2024 | May 15, 2025 |
| Radio frequency control box | MAIWEI | MW100-RFCB | \ | \ | \ |
| Software | MAIWEI | MTS 8310 | \ | \ | \ |

| Radiated Emissions Test (966 Chamber01) | | | | | |
|---|---|---|---|---|---|
| **Equipment** | **Manufacturer** | **Model#** | **Serial#** | **Last Cal.** | **Next Cal.** |
| 966 chamber | ChengYu | 966 Room | 966 | May 16, 2024 | May 15, 2025 |
| Receiver | R&S | ESR3 | 102075 | May 16, 2024 | May 15, 2025 |
| Receiver | R&S | ESRP | 101154 | May 16, 2024 | May 15, 2025 |
| Amplifier | Schwarzbeck | BBV9744 | 9744-0037 | May 16, 2024 | May 15, 2025 |
| TRILOG Broadband Antenna | Schwarzbeck | VULB9163 | 942 | May 21, 2024 | May 20, 2025 |
| Loop Antenna(9KHz -30MHz) | Schwarzbeck | FMZB1519B | 00014 | May 21, 2024 | May 20, 2025 |
| Amplifier | SKET | LAPA_01G18G-45dB | SK2021040901 | May 16, 2024 | May 15, 2025 |
| Horn Antenna | Schwarzbeck | BBHA9120D | 1541 | May 21, 2024 | May 20, 2025 |
| Amplifier(18GHz-40GHz) | MITEQ | TTA1840-35-HG | 2034381 | May 16, 2024 | May 15, 2025 |
| Horn Antenna(18GHz-40GHz) | Schwarzbeck | BBHA9170 | 00822 | May 21, 2024 | May 20, 2025 |
| Spectrum Analyzer9kHz-40GHz | R&S | FSP40 | 100363 | May 16, 2024 | May 15, 2025 |
| Software | Frad | EZ-EMC | FA-03A2 RE | \ | \ |

# 6. Conducted Emissions

## 6.1 Block Diagram Of Test Setup

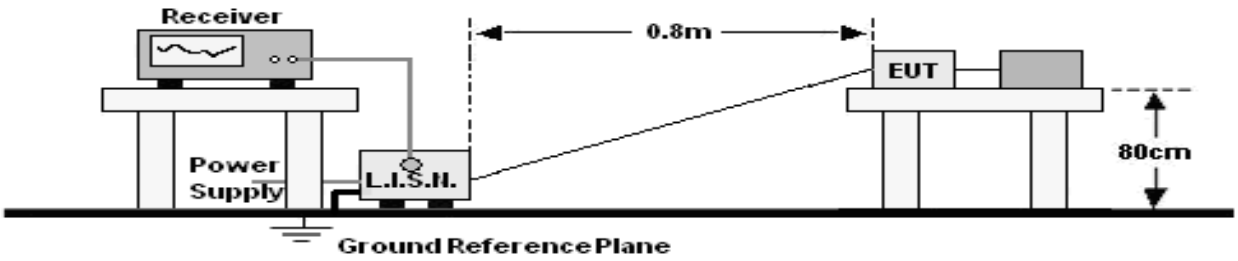


## 6.2 Limit

| FREQUENCY (MHz) | Limit (dBuV) | |
|---|---|---|
| | Quas-peak | Average |
| 0.15 -0.5 | 66 - 56 * | 56 - 46 * |
| 0.50 -5.0 | 56.00 | 46.00 |
| 5.0 -30.0 | 60.00 | 50.00 |

Notes:
1. *Decreasing linearly with logarithm of frequency.
2. The lower limit shall apply at the transition frequencies.

## 6.3 Test Procedure

| Receiver Parameters | Setting |
|---|---|
| Attenuation | 10 dB |
| Start Frequency | 0.15 MHz |
| Stop Frequency | 30 MHz |
| IF Bandwidth | 9 kHz |

a. The Product was placed on a nonconductive table 0.8 m above the horizontal ground reference plane, and 0.4 m from the vertical ground reference plane, and connected to the main through Line Impedance Stability Network (L.I.S.N).
b. The RBW of the receiver was set at 9 kHz in 150 kHz ~ 30MHz with Peak and AVG detector in Max Hold mode. Run the receiver's pre-scan to record the maximum disturbance generated from Product in all power lines in the full band.
c. For each frequency whose maximum record was higher or close to limit, measure its QP and AVG values and record.

## 6.4 EUT Operating Conditions

The EUT was configured for testing in a typical fashion (as a customer would normally use it). The EUT has been programmed to continuously transmit during test. This operating condition was tested and used to collect the included data.

## 6.5 Test Result

| | | | |
|---|---|---|---|
| Temperature: | 22.9 ℃ | Relative Humidity: | 58% |
| Pressure: | 101KPa | Phase : | L |
| Test Mode: | Mode 4 | Test Voltage : | AC120V/60Hz |

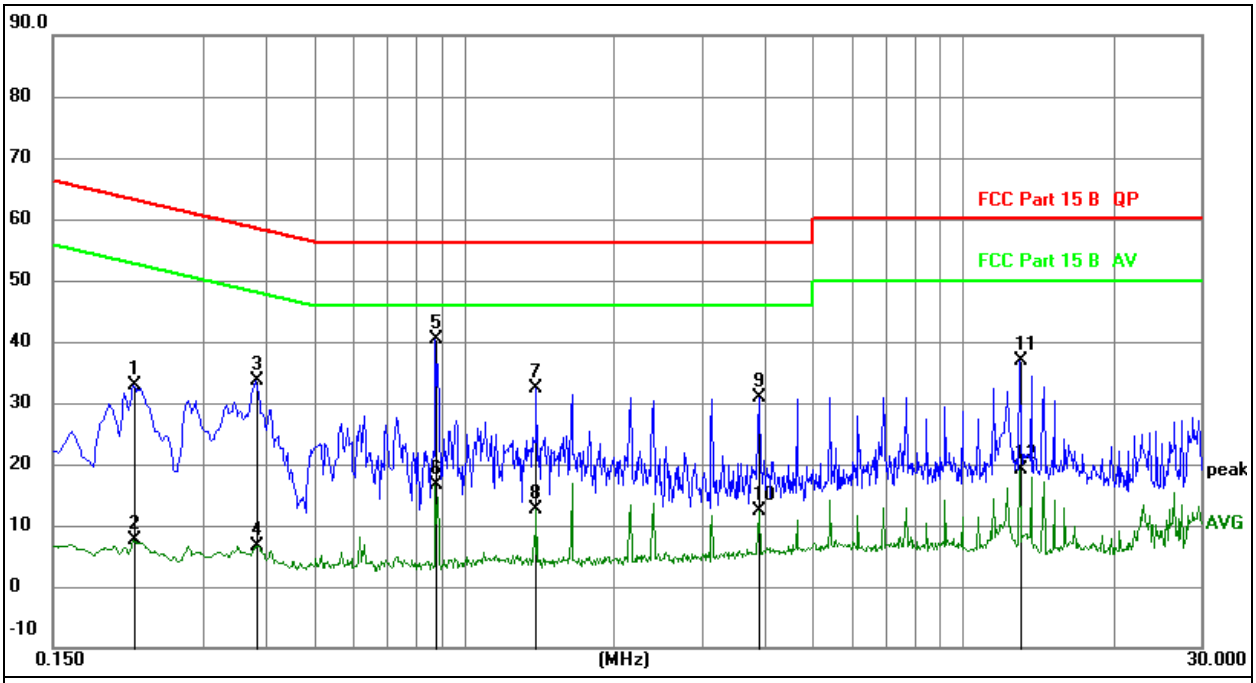


Remark:
1. All readings are Quasi-Peak and Average values.
2. Factor = Insertion Loss + Cable Loss.
3. Measurement=Reading Level+ Correct Factor
4. Over=Measurement-Limit

| No. | Mk. | Freq. | Reading Level | Correct Factor | Measure-ment | Limit | Over | |
|---|---|---|---|---|---|---|---|---|
| | | MHz | | dB | dBuV | dBuV | dB | Detector |
| 1 | | 0.2174 | 12.83 | 20.07 | 32.90 | 62.92 | -30.02 | QP |
| 2 | | 0.2174 | -12.56 | 20.07 | 7.51 | 52.92 | -45.41 | AVG |
| 3 | | 0.3832 | 13.60 | 20.08 | 33.68 | 58.21 | -24.53 | QP |
| 4 | | 0.3832 | -13.40 | 20.08 | 6.68 | 48.21 | -41.53 | AVG |
| 5 | * | 0.8757 | 20.36 | 20.09 | 40.45 | 56.00 | -15.55 | QP |
| 6 | | 0.8757 | -3.41 | 20.09 | 16.68 | 46.00 | -29.32 | AVG |
| 7 | | 1.3958 | 12.25 | 20.09 | 32.34 | 56.00 | -23.66 | QP |
| 8 | | 1.3958 | -7.42 | 20.09 | 12.67 | 46.00 | -33.33 | AVG |
| 9 | | 3.9014 | 10.79 | 20.14 | 30.93 | 56.00 | -25.07 | QP |
| 10 | | 3.9014 | -7.86 | 20.14 | 12.28 | 46.00 | -33.72 | AVG |
| 11 | | 12.9885 | 16.65 | 20.25 | 36.90 | 60.00 | -23.10 | QP |
| 12 | | 12.9885 | -1.02 | 20.25 | 19.23 | 50.00 | -30.77 | AVG |

| | | | |
|---|---|---|---|
| Temperature: | 22.9 ℃ | Relative Humidity: | 58% |
| Pressure: | 101KPa | Phase : | N |
| Test Mode: | Mode 4 | Test Voltage : | AC120V/60Hz |

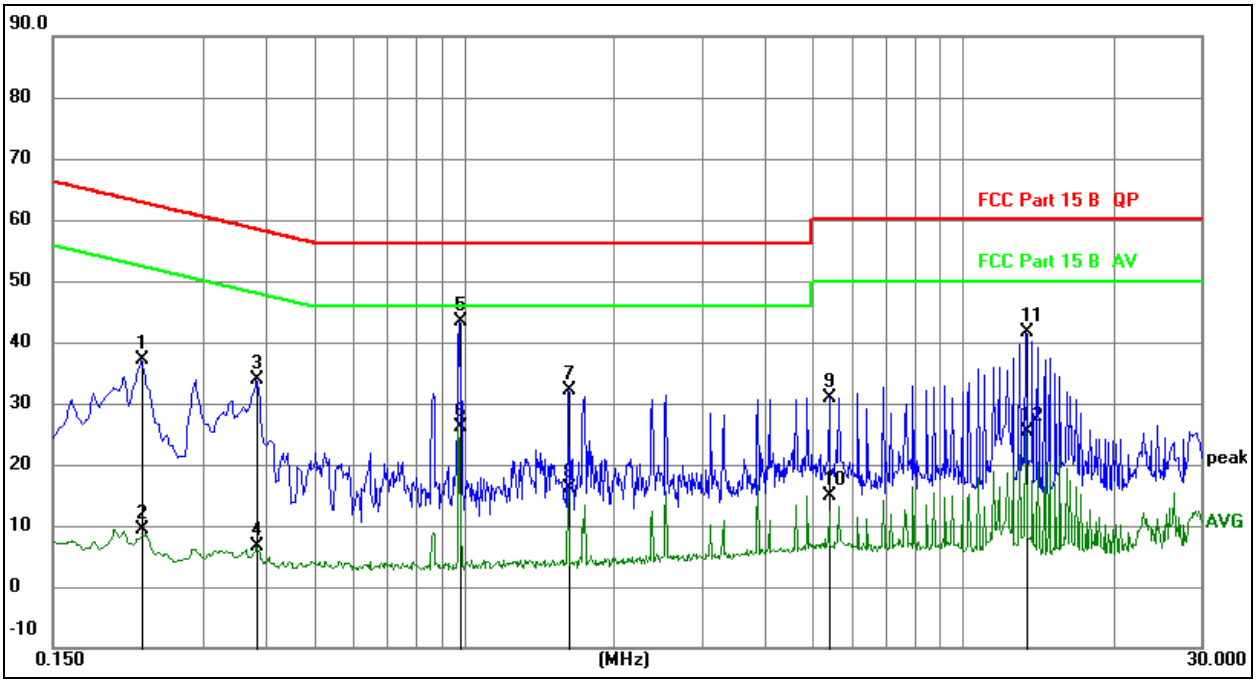


Remark:
1. All readings are Quasi-Peak and Average values.
2. Factor = Insertion Loss + Cable Loss.
3. Measurement=Reading Level+ Correct Factor
4. Over=Measurement-Limit

| No. | Mk. | Freq. | Reading Level | Correct Factor | Measure-ment | Limit | Over | |
|---|---|---|---|---|---|---|---|---|
| | | MHz | | dB | dBuV | dBuV | dB | Detector |
| 1 | | 0.2265 | 17.06 | 20.07 | 37.13 | 62.58 | -25.45 | QP |
| 2 | | 0.2265 | -10.77 | 20.07 | 9.30 | 52.58 | -43.28 | AVG |
| 3 | | 0.3840 | 13.76 | 20.08 | 33.84 | 58.19 | -24.35 | QP |
| 4 | | 0.3840 | -13.45 | 20.08 | 6.63 | 48.19 | -41.56 | AVG |
| 5 | * | 0.9825 | 23.35 | 20.09 | 43.44 | 56.00 | -12.56 | QP |
| 6 | | 0.9825 | 6.13 | 20.09 | 26.22 | 46.00 | -19.78 | AVG |
| 7 | | 1.6260 | 11.93 | 20.10 | 32.03 | 56.00 | -23.97 | QP |
| 8 | | 1.6260 | -3.98 | 20.10 | 16.12 | 46.00 | -29.88 | AVG |
| 9 | | 5.4015 | 10.83 | 20.15 | 30.98 | 60.00 | -29.02 | QP |
| 10 | | 5.4015 | -5.37 | 20.15 | 14.78 | 50.00 | -35.22 | AVG |
| 11 | | 13.3800 | 21.36 | 20.26 | 41.62 | 60.00 | -18.38 | QP |
| 12 | | 13.3800 | 5.21 | 20.26 | 25.47 | 50.00 | -24.53 | AVG |

# 7. Radiated Emissions

## 7.1 Block Diagram Of Test Setup

（A）Radiated Emission Test-Up Frequency Below 30MHz

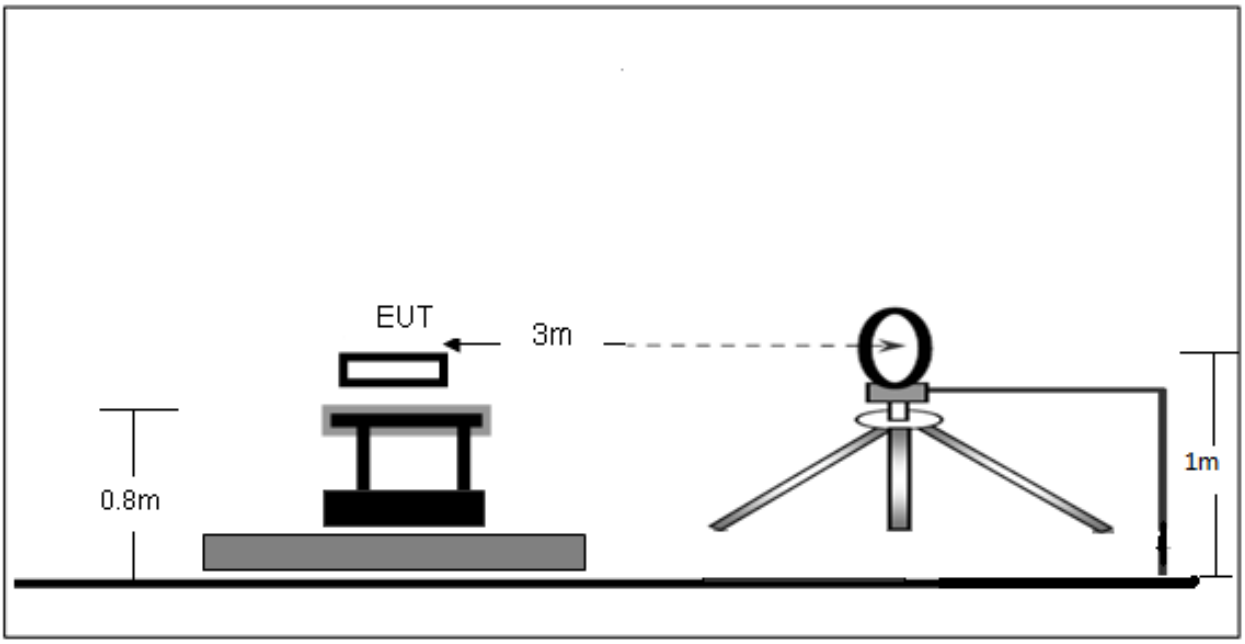


（B）Radiated Emission Test-Up Frequency 30MHz~1GHz

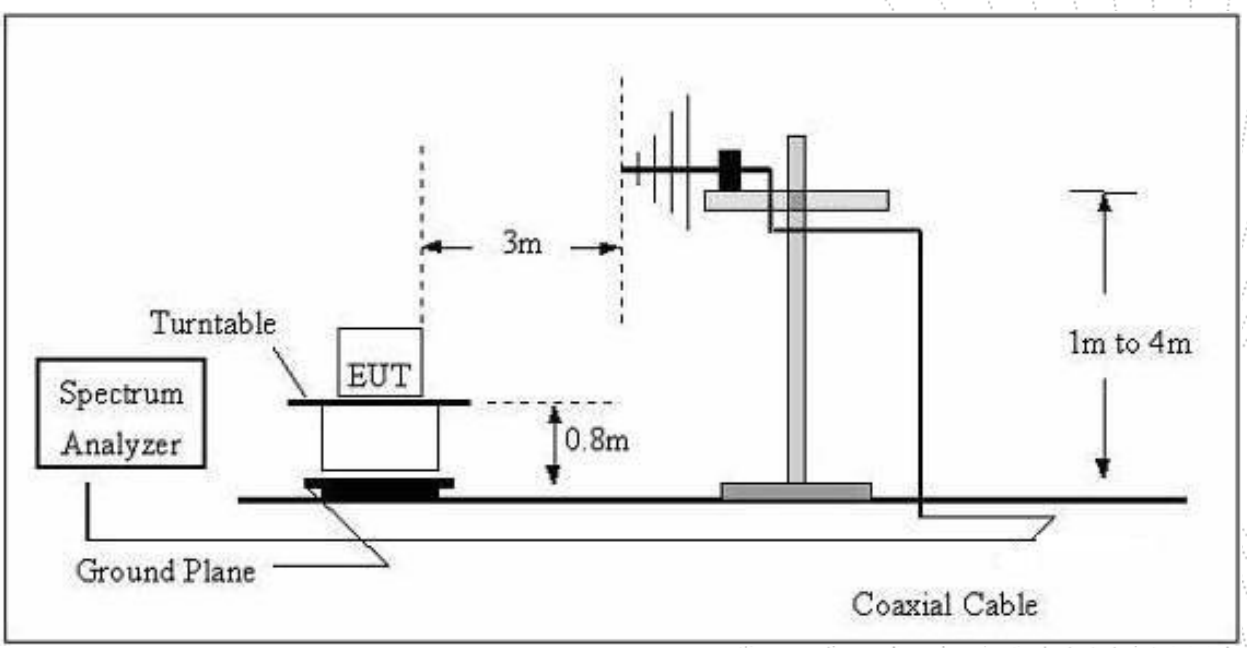

（C）Radiated Emission Test-Up Frequency Above 1GHz

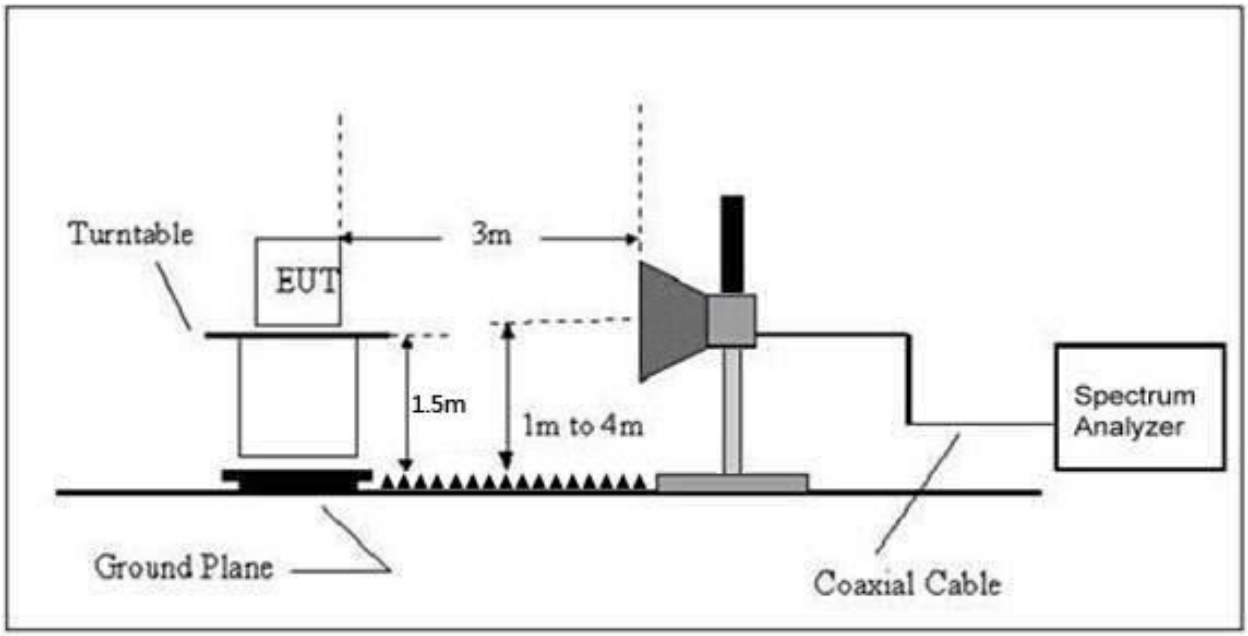


## 7.2 Limit

20dBc in any 100 kHz bandwidth outside the operating frequency band. In case the emission fall within the restricted band specified on 15.205(a), then the 15.209(a) limit in the table below has to be followed.

| Frequency | Field Strength | Distance | Field Strength Limit at 3m Distance | |
|---|---|---|---|---|
| (MHz) | uV/m | (m) | uV/m | dBuV/m |
| 0.009 ~ 0.490 | 2400/F(kHz) | 300 | 10000 * 2400/F(kHz) | $20\log^{(2400/F(kHz))} + 80$ |
| 0.490 ~ 1.705 | 24000/F(kHz) | 30 | 100 * 24000/F(kHz) | $20\log^{(24000/F(kHz))} + 40$ |
| 1.705 ~ 30 | 30 | 30 | 100 * 30 | $20\log^{(30)} + 40$ |
| 30 ~ 88 | 100 | 3 | 100 | $20\log^{(100)}$ |
| 88 ~ 216 | 150 | 3 | 150 | $20\log^{(150)}$ |
| 216 ~ 960 | 200 | 3 | 200 | $20\log^{(200)}$ |
| Above 960 | 500 | 3 | 500 | $20\log^{(500)}$ |

LIMITS OF RADIATED EMISSION MEASUREMENT (Above 1000MHz)

| FREQUENCY (MHz) | Limit (dBuV/m) (at 3M) | |
|---|---|---|
| | PEAK | AVERAGE |
| Above 1000 | 74 | 54 |

Notes:
(1) The limit for radiated test was performed according to FCC PART 15C.
(2) The tighter limit applies at the band edges.
(3) Emission level (dBuV/m)=20log Emission level (uV/m).

FREQUENCY RANGE OF RADIATED MEASUREMENT (For unintentional radiators)

| Highest frequency generated or Upper frequency of measurement used in the device or on which the device operates or tunes (MHz) | Range (MHz) |
|---|---|
| Below 1.705 | 30 |
| 1.705 – 108 | 1000 |
| 108 – 500 | 2000 |
| 500 – 1000 | 5000 |
| Above 1000 | 5th harmonic of the highest frequency or 40 GHz, whichever is lower |

## 7.3 Test Procedure

| Receiver Parameter | Setting |
|---|---|
| Attenuation | Auto |
| 9kHz~150kHz | RBW 200Hz for QP |
| 150kHz~30MHz | RBW 9kHz for QP |
| 30MHz~1000MHz | RBW 120kHz for QP |

| Spectrum Parameter | Setting |
|---|---|
| 1-25GHz | RBW 1 MHz /VBW 1 MHz for Peak,<br>RBW 1 MHz / VBW 10Hz for Average |

Below 1GHz test procedure as below:
a. The EUT was placed on the top of a rotating table 0.8 meters above the ground at a 3 meter semi-anechoic chamber. The table was rotated 360 degrees to determine the position of the highest radiation.
b. The EUT was set 3 meters away from the interference-receiving antenna, which was mounted on the top of a variable-height antenna tower.
c. The antenna height is varied from one meter to four meters above the ground to determine the maximum value of the field strength. Both horizontal and vertical polarizations of the antenna are set to make the measurement.
d. For each suspected emission, the EUT was arranged to its worst case and then the antenna was tuned to heights from 1 meter to 4 meters (for the test frequency of below 30MHz, the antenna was tuned to heights 1 meter) and the rotatable table was turned from 0 degrees to 360 degrees to find the maximum reading.
e. The test-receiver system was set to Peak Detect Function and Specified Bandwidth with Maximum Hold Mode.
f. If the emission level of the EUT in peak mode was 10dB lower than the limit specified, then testing could be stopped and the peak values of the EUT would be reported. Otherwise the emissions that did not have 10dB margin would be re-tested one by one using peak, quasi-peak or average method as specified and then reported in a data sheet.
Above 1GHz test procedure as below:
g. Different between above is the test site, change from Semi- Anechoic Chamber to fully Anechoic Chamber and change form table 0.8 metre to 1.5 metre (Above 18GHz the distance is 1 meter and table is 1.5 metre).
h. Test the EUT in the lowest channel, the middle channel, the Highest channel.
Note:
Both horizontal and vertical antenna polarities were tested and performed pretest to three orthogonal axis. The worst case emissions were reported.

Above 1GHz test procedure as below:
a. The EUT was placed on the top of a rotating table 1.5 meters above the ground at a 3 meter chamber. The table was rotated 360 degrees to determine the position of the highest radiation.
b. The EUT was set 3 meters away from the interference-receiving antenna, which was mounted on the top of a variable-height antenna tower.
c. The antenna height is varied from one meter to four meters above the ground to determine the maximum value of the field strength. Both horizontal and vertical polarizations of the antenna are set to make the measurement.
d. For each suspected emission, the EUT was arranged to its worst case and then the antenna was tuned to heights from 1 meter to 4 meters and the rota table was turned from 0 degrees to 360 degrees to find the maximum reading.
e. The test-receiver system was set to Peak Detect Function and Specified Bandwidth with Maximum Hold Mode.
f. If the emission level of the EUT in peak mode was 10dB lower than the limit specified, then testing could be stopped and the peak values of the EUT would be reported. Otherwise the emissions that did not have 10dB margin would be re-tested one by one using peak, quasi-peak or average method as specified and then reported in a data sheet.
g. Test the EUT in the lowest channel, the Highest channel.
Note:
Both horizontal and vertical antenna polarities were tested and performed pretest to three orthogonal axis. The worst case emissions were reported.

## 7.4 EUT Operating Conditions

The EUT was configured for testing in a typical fashion (as a customer would normally use it). The EUT has been programmed to continuously transmit during test. This operating condition was tested and used to collect the included data.

## 7.5 Test Result

Below 30MHz

| | | | |
|---|---|---|---|
| Temperature: | 25.8℃ | Relative Humidity: | 59% |
| Pressure: | 101KPa | Test Voltage: | AC120V/60Hz |
| Test Mode: | Mode 4 | Polarization : | -- |

| Freq. | Reading | Limit | Margin | State |
|---|---|---|---|---|
| (MHz) | (dBuV/m) | (dBuV/m) | (dB) | P/F |
| -- | -- | -- | -- | PASS |
| -- | -- | -- | -- | PASS |

Note:
The amplitude of spurious emissions which are attenuated by more than 20dB below the permissible value has no need to be reported.
Distance extrapolation factor =40 log (specific distance/test distance) (dB);
Limit line = specific limits(dBuv) + distance extrapolation factor.

Between 30MHz – 1GHz

| | | | |
|---|---|---|---|
| Temperature: | 25.8℃ | Relative Humidity: | 59% |
| Pressure: | 101KPa | Phase : | Horizontal |
| Test Mode: | Mode 4 | Test Voltage : | AC120V/60Hz |

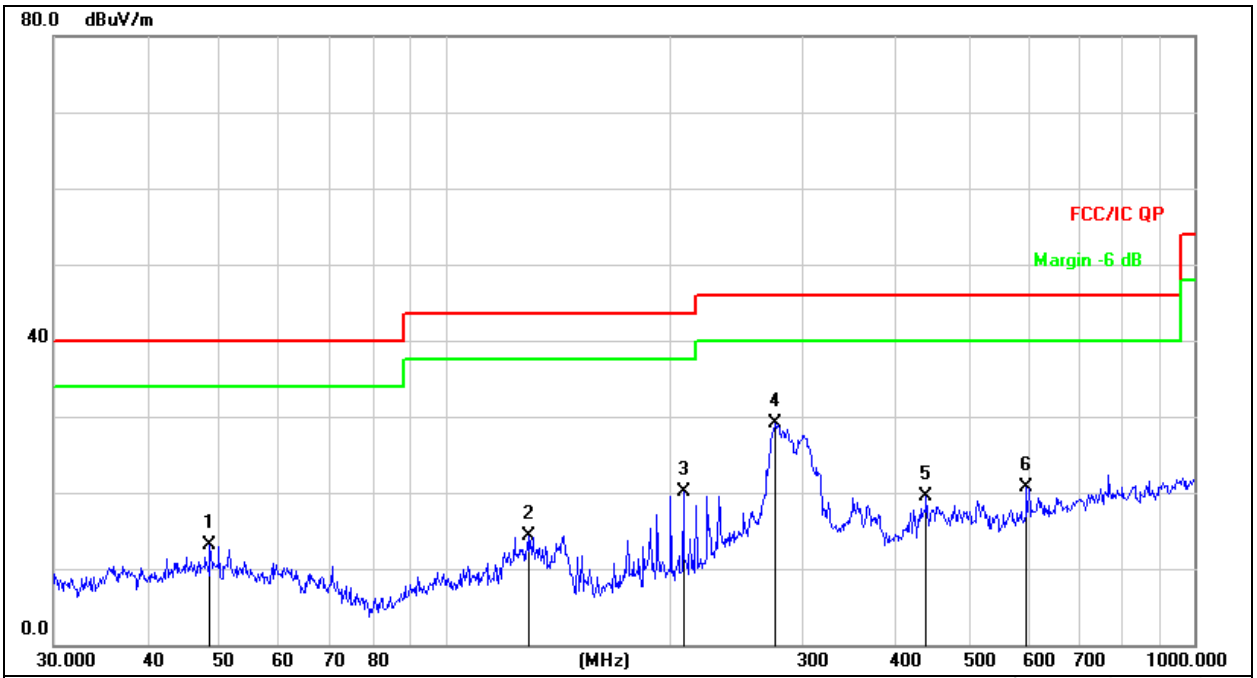


Remark:
1. Factor = Antenna Factor + Cable Loss – Pre-amplifier.
2. Measurement=Reading Level+ Correct Factor
3. Over=Measurement-Limit

| No. | Mk. | Freq. | Reading Level | Correct Factor | Measure-ment | Limit | Over | |
|---|---|---|---|---|---|---|---|---|
| | | MHz | dBuV | dB | dBuV/m | dB/m | dB | Detector |
| 1 | | 48.5016 | 27.11 | -14.02 | 13.09 | 40.00 | -26.91 | QP |
| 2 | | 129.4677 | 32.33 | -17.99 | 14.34 | 43.50 | -29.16 | QP |
| 3 | | 207.8501 | 35.57 | -15.50 | 20.07 | 43.50 | -23.43 | QP |
| 4 | * | 275.1570 | 42.92 | -13.76 | 29.16 | 46.00 | -16.84 | QP |
| 5 | | 438.6554 | 29.65 | -10.08 | 19.57 | 46.00 | -26.43 | QP |
| 6 | | 597.2234 | 27.85 | -7.21 | 20.64 | 46.00 | -25.36 | QP |

| | | | |
|---|---|---|---|
| Temperature: | 25.8℃ | Relative Humidity: | 59% |
| Pressure: | 101KPa | Phase : | Vertical |
| Test Mode: | Mode 4 | Test Voltage : | AC120V/60Hz |

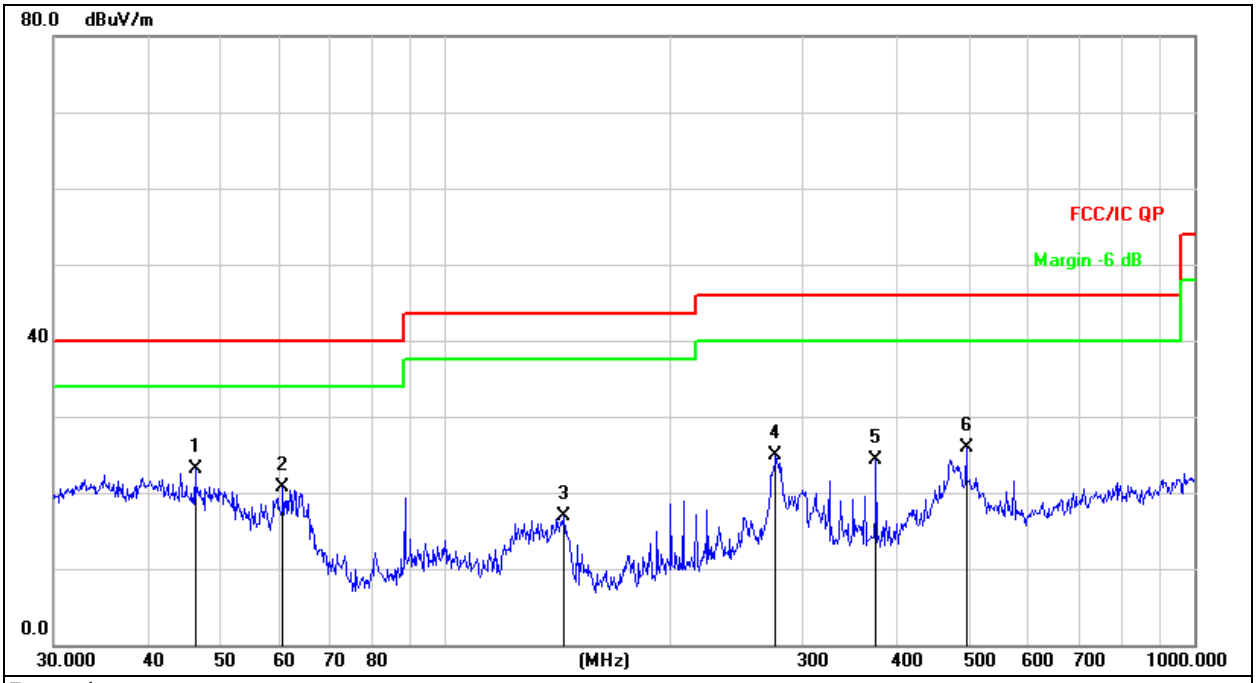


Remark:
1. Factor = Antenna Factor + Cable Loss – Pre-amplifier.
2. Measurement=Reading Level+ Correct Factor
3. Over=Measurement-Limit

| No. | Mk. | Freq. | Reading Level | Correct Factor | Measure-ment | Limit | Over | |
|---|---|---|---|---|---|---|---|---|
| | | MHz | dBuV | dB | dBuV/m | dB/m | dB | Detector |
| 1 | * | 46.3402 | 37.29 | -14.20 | 23.09 | 40.00 | -16.91 | QP |
| 2 | | 60.7044 | 36.22 | -15.44 | 20.78 | 40.00 | -19.22 | QP |
| 3 | | 143.8295 | 35.88 | -19.00 | 16.88 | 43.50 | -26.62 | QP |
| 4 | | 276.1235 | 38.59 | -13.74 | 24.85 | 46.00 | -21.15 | QP |
| 5 | | 375.9385 | 35.50 | -11.15 | 24.35 | 46.00 | -21.65 | QP |
| 6 | | 495.9344 | 34.70 | -8.71 | 25.99 | 46.00 | -20.01 | QP |

Between 1GHz – 25GHz

| GFSK | | | | | | | |
|---|---|---|---|---|---|---|---|
| Polar (H/V) | Fre-quency (MHz) | Reading Level (dBuV/m) | Correct Factor (dB) | Measure-ment (dBuV/m) | Limits (dBuV/m) | Over (dB) | Detector Type |
| Low channel | | | | | | | |
| V | 4804.00 | 67.35 | -19.99 | 47.36 | 74.00 | -26.64 | PK |
| V | 4804.00 | 53.02 | -19.99 | 33.03 | 54.00 | -20.97 | AV |
| V | 7206.00 | 67.03 | -14.22 | 52.81 | 74.00 | -21.19 | PK |
| V | 7206.00 | 53.60 | -14.22 | 39.38 | 54.00 | -14.62 | AV |
| H | 4804.00 | 69.68 | -19.99 | 49.69 | 74.00 | -24.31 | PK |
| H | 4804.00 | 53.85 | -19.99 | 33.86 | 54.00 | -20.14 | AV |
| H | 7206.00 | 67.37 | -14.22 | 53.15 | 74.00 | -20.85 | PK |
| H | 7206.00 | 52.79 | -14.22 | 38.57 | 54.00 | -15.43 | AV |
| Middle channel | | | | | | | |
| V | 4880.00 | 69.64 | -19.84 | 49.80 | 74.00 | -24.20 | PK |
| V | 4880.00 | 52.33 | -19.84 | 32.49 | 54.00 | -21.51 | AV |
| V | 7320.00 | 68.78 | -13.90 | 54.88 | 74.00 | -19.12 | PK |
| V | 7320.00 | 53.82 | -13.90 | 39.92 | 54.00 | -14.08 | AV |
| H | 4880.00 | 67.04 | -19.84 | 47.20 | 74.00 | -26.80 | PK |
| H | 4880.00 | 52.67 | -19.84 | 32.83 | 54.00 | -21.17 | AV |
| H | 7320.00 | 69.90 | -13.90 | 56.00 | 74.00 | -18.00 | PK |
| H | 7320.00 | 52.22 | -13.90 | 38.32 | 54.00 | -15.68 | AV |
| High channel | | | | | | | |
| V | 4960.00 | 68.98 | -19.68 | 49.30 | 74.00 | -24.70 | PK |
| V | 4960.00 | 53.47 | -19.68 | 33.79 | 54.00 | -20.21 | AV |
| V | 7440.00 | 69.61 | -13.57 | 56.04 | 74.00 | -17.96 | PK |
| V | 7440.00 | 52.09 | -13.57 | 38.52 | 54.00 | -15.48 | AV |
| H | 4960.00 | 68.69 | -19.68 | 49.01 | 74.00 | -24.99 | PK |
| H | 4960.00 | 54.66 | -19.68 | 34.98 | 54.00 | -19.02 | AV |
| H | 7440.00 | 68.36 | -13.57 | 54.79 | 74.00 | -19.21 | PK |
| H | 7440.00 | 54.92 | -13.57 | 41.35 | 54.00 | -12.65 | AV |

Remark:
1.Measurement = Reading Level + Correct Factor,
Correct Factor = Antenna Factor + Cable Loss – Pre-amplifier,
Over= Measurement – Limit
2.If peak below the average limit, the average emission was no test.
3. In restricted bands of operation, The spurious emissions below the permissible value more than 20dB
4. The amplitude of spurious emissions which are attenuated by more than 20dB below the permissible value has no need to be reported.

# 8. Radiated Band Emission Measurement And Restricted Bands Of Operation

## 8.1 Block Diagram Of Test Setup

Radiated Emission Test-Up Frequency Above 1GHz

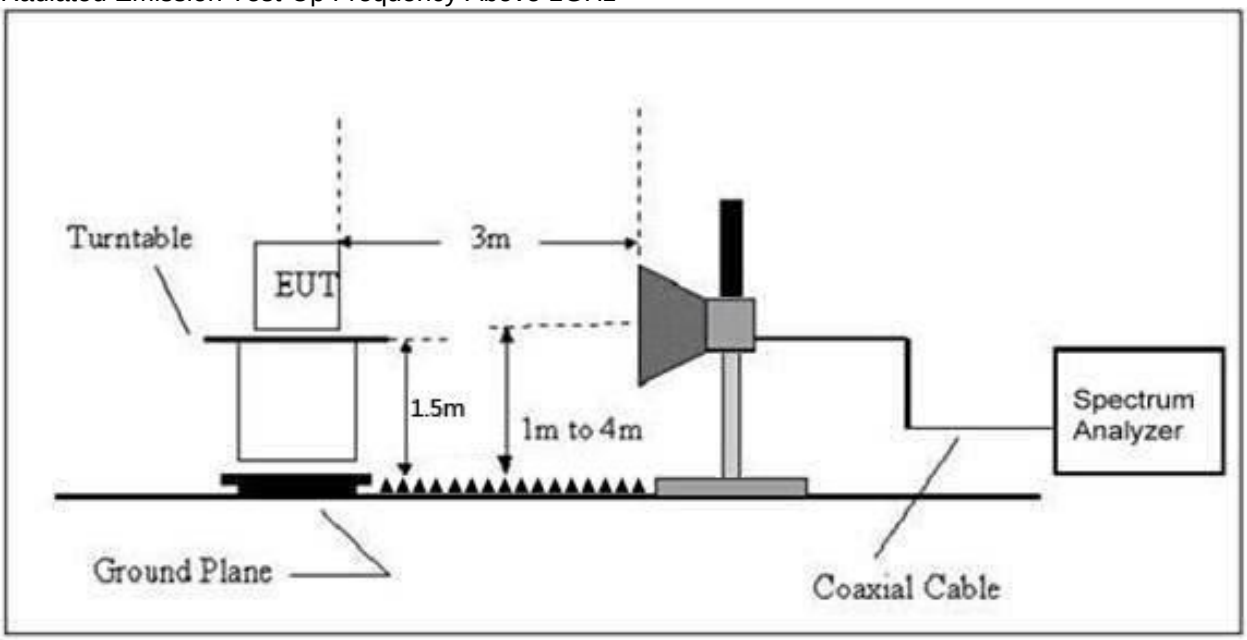


## 8.2 Limit

FCC Part15 C Section 15.209 and 15.205

(a) Except as shown in paragraph (d) of this section, only spurious emissions are permitted in any of the frequency bands listed below:

| MHz | MHz | MHz | GHz |
|---|---|---|---|
| 0.090-0.110 | 16.42-16.423 | 399.9-410 | 4.5-5.15 |
| [1]0.495-0.505 | 16.69475-16.69525 | 608-614 | 5.35-5.46 |
| 2.1735-2.1905 | 16.80425-16.80475 | 960-1240 | 7.25-7.75 |
| 4.125-4.128 | 25.5-25.67 | 1300-1427 | 8.025-8.5 |
| 4.17725-4.17775 | 37.5-38.25 | 1435-1626.5 | 9.0-9.2 |
| 4.20725-4.20775 | 73-74.6 | 1645.5-1646.5 | 9.3-9.5 |
| 6.215-6.218 | 74.8-75.2 | 1660-1710 | 10.6-12.7 |
| 6.26775-6.26825 | 108-121.94 | 1718.8-1722.2 | 13.25-13.4 |
| 6.31175-6.31225 | 123-138 | 2200-2300 | 14.47-14.5 |
| 8.291-8.294 | 149.9-150.05 | 2310-2390 | 15.35-16.2 |
| 8.362-8.366 | 156.52475-156.52525 | 2483.5-2500 | 17.7-21.4 |
| 8.37625-8.38675 | 156.7-156.9 | 2690-2900 | 22.01-23.12 |
| 8.41425-8.41475 | 162.0125-167.17 | 3260-3267 | 23.6-24.0 |
| 12.29-12.293 | 167.72-173.2 | 3332-3339 | 31.2-31.8 |
| 12.51975-12.52025 | 240-285 | 3345.8-3358 | 36.43-36.5 |
| 12.57675-12.57725 | 322-335.4 | 3600-4400 | ([2]) |
| 13.36-13.41 | | | |

LIMITS OF RADIATED EMISSION MEASUREMENT (Above 1000MHz)

| FREQUENCY (MHz) | Limit (dBuV/m) (at 3M) | |
|---|---|---|
| | PEAK | AVERAGE |
| Above 1000 | 74 | 54 |

Notes:
(1) The limit for radiated test was performed according to FCC PART 15C.
(2) The tighter limit applies at the band edges.
(3) Emission level (dBuV/m)=20log Emission level (uV/m).

## 8.3 Test Procedure

| Receiver Parameter | Setting |
|---|---|
| Attenuation | Auto |
| Start Frequency | 2300MHz |
| Stop Frequency | 2520 |
| RB / VB (emission in restricted band) | 1 MHz / 1 MHz for Peak, 1 MHz / 10Hz for Average |

Above 1GHz test procedure as below:
a. The EUT was placed on the top of a rotating table 1.5 meters above the ground at a 3 meter chamber. The table was rotated 360 degrees to determine the position of the highest radiation.
b. The EUT was set 3 meters away from the interference-receiving antenna, which was mounted on the top of a variable-height antenna tower.
c. The antenna height is varied from one meter to four meters above the ground to determine the maximum value of the field strength. Both horizontal and vertical polarizations of the antenna are set to make the measurement.
d. For each suspected emission, the EUT was arranged to its worst case and then the antenna was tuned to heights from 1 meter to 4 meters and the rota table was turned from 0 degrees to 360 degrees to find the maximum reading.
e. The test-receiver system was set to Peak Detect Function and Specified Bandwidth with Maximum Hold Mode.
f. If the emission level of the EUT in peak mode was 10dB lower than the limit specified, then testing could be stopped and the peak values of the EUT would be reported. Otherwise the emissions that did not have 10dB margin would be re-tested one by one using peak, quasi-peak or average method as specified and then reported in a data sheet.
g. Test the EUT in the lowest channel, the Highest channel.
Note:
Both horizontal and vertical antenna polarities were tested and performed pretest to three orthogonal axis. The worst case emissions were reported.

## 8.4 EUT operating Conditions

The EUT was configured for testing in a typical fashion (as a customer would normally use it). The EUT has been programmed to continuously transmit during test. This operating condition was tested and used to collect the included data.

## 8.5 Test Result

| | Polar (H/V) | Frequency (MHz) | Reading Level (dBuV/m) | Correct Factor (dB) | Measure-ment (dBuV/m) | Limits (dBuV/m) | | Result |
|---|---|---|---|---|---|---|---|---|
| | | | | | PK | PK | AV | |
| GFSK | Low Channel 2402MHz | | | | | | | |
| | H | 2390.00 | 72.58 | -25.43 | 47.15 | 74.00 | 54.00 | PASS |
| | H | 2400.00 | 71.49 | -25.40 | 46.09 | 74.00 | 54.00 | PASS |
| | V | 2390.00 | 72.09 | -25.43 | 46.66 | 74.00 | 54.00 | PASS |
| | V | 2400.00 | 75.36 | -25.40 | 49.96 | 74.00 | 54.00 | PASS |
| | High Channel 2480MHz | | | | | | | |
| | H | 2483.50 | 74.25 | -25.15 | 49.10 | 74.00 | 54.00 | PASS |
| | H | 2500.00 | 73.64 | -25.10 | 48.54 | 74.00 | 54.00 | PASS |
| | V | 2483.50 | 73.92 | -25.15 | 48.77 | 74.00 | 54.00 | PASS |
| | V | 2500.00 | 71.20 | -25.10 | 46.10 | 74.00 | 54.00 | PASS |

**Remark:**
1.Measurement = Reading Level + Correct Factor,
Correct Factor = Antenna Factor + Cable Loss – Pre-amplifier,
Over= Measurement – Limit
2. If the PK measured levels comply with average limit, then the average level were deemed to comply with average limit.
3 In restricted bands of operation, The spurious emissions below the permissible value more than 20dB
4. The amplitude of spurious emissions which are attenuated by more than 20dB below the permissible value has no need to be reported.

# 9. Power Spectral Density Test

## 9.1 Block Diagram Of Test Setup

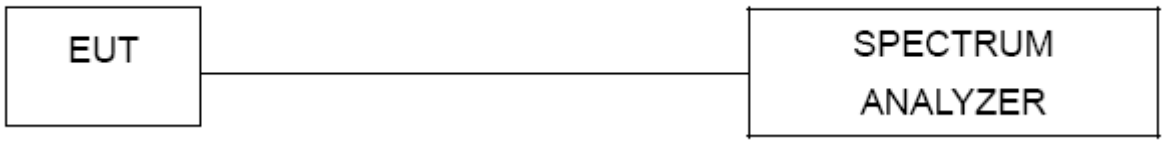


## 9.2 Limit

| FCC Part15 (15.247) , Subpart C | | | | |
|---|---|---|---|---|
| **Section** | **Test Item** | **Limit** | **Frequency Range (MHz)** | **Result** |
| 15.247 | Power Spectral Density | 8 dBm (in any 3KHz) | 2400-2483.5 | PASS |

LIMITS OF RADIATED EMISSION MEASUREMENT (Above 1000MHz)

## 9.3 Test Procedure

1. Set analyzer center frequency to DTS channel center frequency.
2. Set the span to 1.5 times the DTS bandwidth.
3. Set the RBW to: 3 kHz
4. Set the VBW ≥ 3 x RBW.
5. Detector = peak.
6. Sweep time = auto couple.
7. Trace mode = max hold.
8. Allow trace to fully stabilize.
9. Use the peak marker function to determine the maximum amplitude level within the RBW.
10. If measured value exceeds limit, reduce RBW (no less than 3 kHz) and repeat.

## 9.4 EUT Operating Conditions

The EUT tested system was configured as the statements of 4.6 Unless otherwise a special operating condition is specified in the follows during the testing.
Note: Power Spectral Density(dBm)=Reading+Cable Loss

## 9.5 Test Result

| | | | |
|---|---|---|---|
| Temperature: | 26℃ | Relative Humidity: | 54% |
| Test Mode : | GFSK | Test Voltage : | DC 3.7V |

| Condition | Mode | Frequency (MHz) | Conducted PSD (dBm/3kHz) | Limit (dBm/3kHz) | Verdict |
|---|---|---|---|---|---|
| NVNT | BLE 1M | 2402 | -14.61 | 8 | Pass |
| NVNT | BLE 1M | 2440 | -14.54 | 8 | Pass |
| NVNT | BLE 1M | 2480 | -14.47 | 8 | Pass |

Test Graphs

PSD NVNT BLE 1M 2402MHz

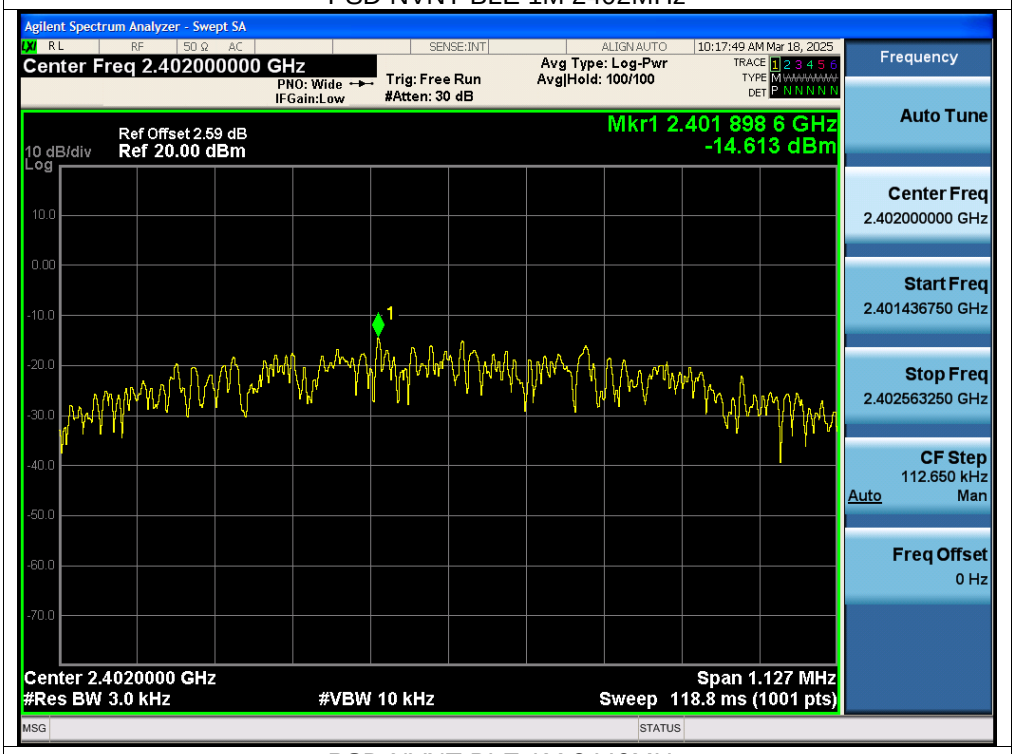


PSD NVNT BLE 1M 2440MHz

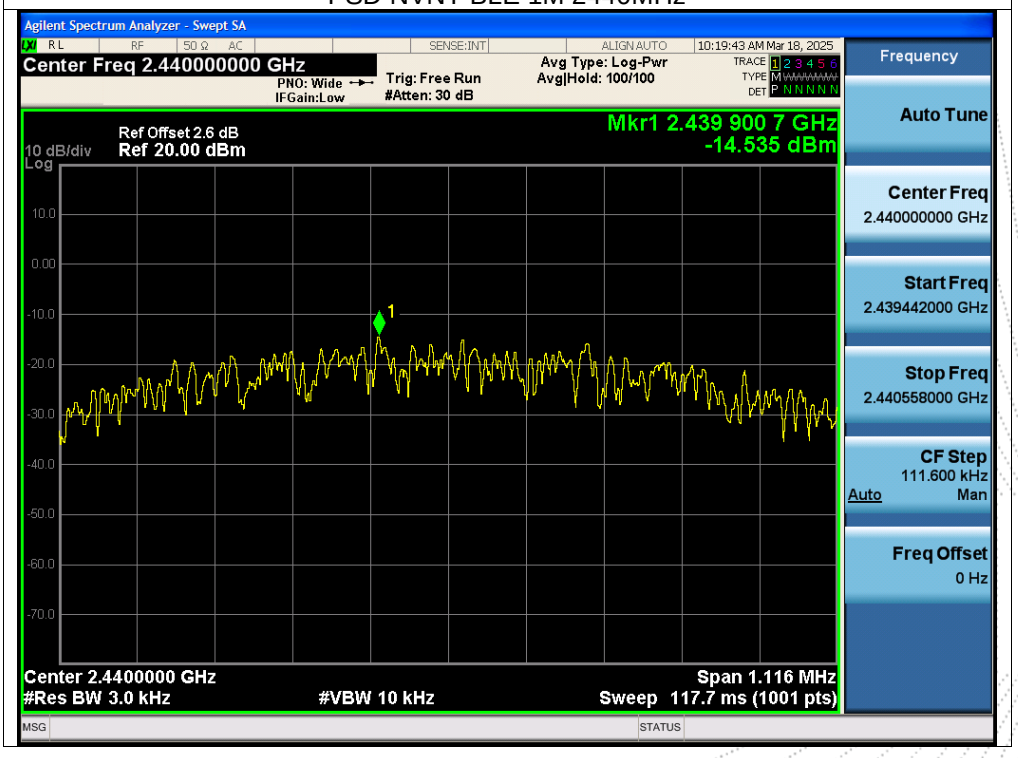

PSD NVNT BLE 1M 2480MHz

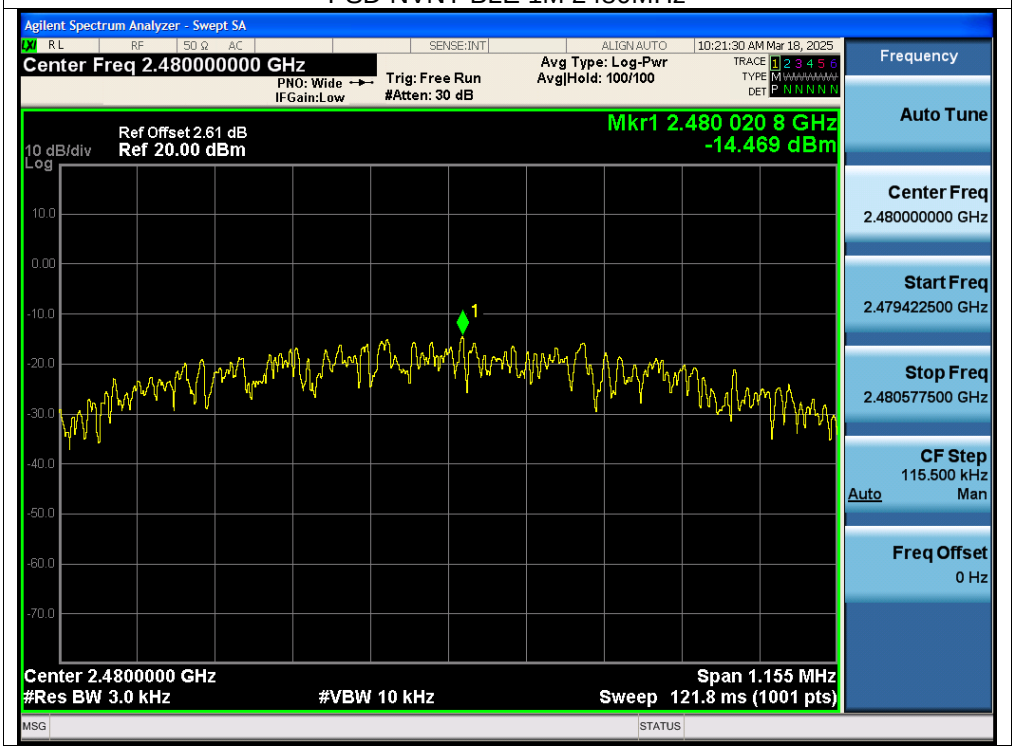

# 10. Bandwidth Test

## 10.1 Block Diagram Of Test Setup

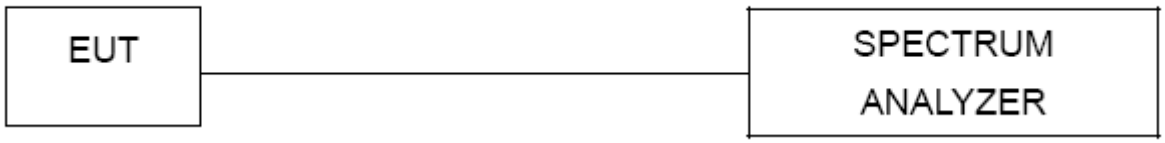


## 10.2 Limit

| FCC Part15 (15.247) , Subpart C | | | | |
|---|---|---|---|---|
| **Section** | **Test Item** | **Limit** | **Frequency Range (MHz)** | **Result** |
| 15.247(a)(2) | Bandwidth | >= 500KHz (6dB bandwidth) | 2400-2483.5 | PASS |

## 10.3 Test Procedure

1. Set RBW = 100 kHz.
2. Set the video bandwidth (VBW) ≥ 3 x RBW.
3. Detector = Peak.
4. Trace mode = max hold.
5. Sweep = auto couple.
6. Allow the trace to stabilize.
7. Measure the maximum width of the emission that is constrained by the frequencies associated with the two outermost amplitude points (upper and lower frequencies) that are attenuated by 6 dB relative to the maximum level measured in the fundamental emission.

## 10.4 EUT Operating Conditions

The EUT tested system was configured as the statements of 4.6 Unless otherwise a special operating condition is specified in the follows during the testing.
Note: Power Spectral Density(dBm)=Reading+Cable Loss

## 10.5 Test Result

| | | | |
|---|---|---|---|
| Temperature: | 26℃ | Relative Humidity: | 54% |
| Test Mode : | GFSK | Test Voltage : | DC 3.7V |

| Condition | Mode | Frequency (MHz) | -6 dB Bandwidth (MHz) | Limit -6 dB Bandwidth (MHz) | Verdict |
|---|---|---|---|---|---|
| NVNT | BLE 1M | 2402 | 0.751 | 0.5 | Pass |
| NVNT | BLE 1M | 2440 | 0.744 | 0.5 | Pass |
| NVNT | BLE 1M | 2480 | 0.77 | 0.5 | Pass |

Test Graphs

-6dB Bandwidth NVNT BLE 1M 2402MHz

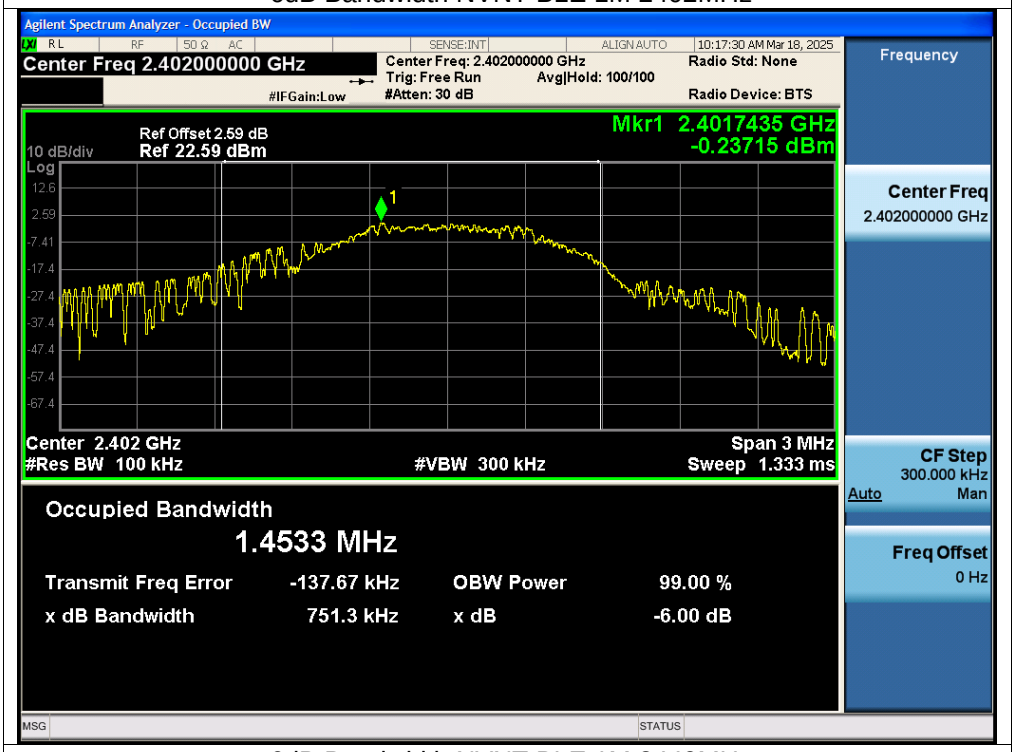


-6dB Bandwidth NVNT BLE 1M 2440MHz

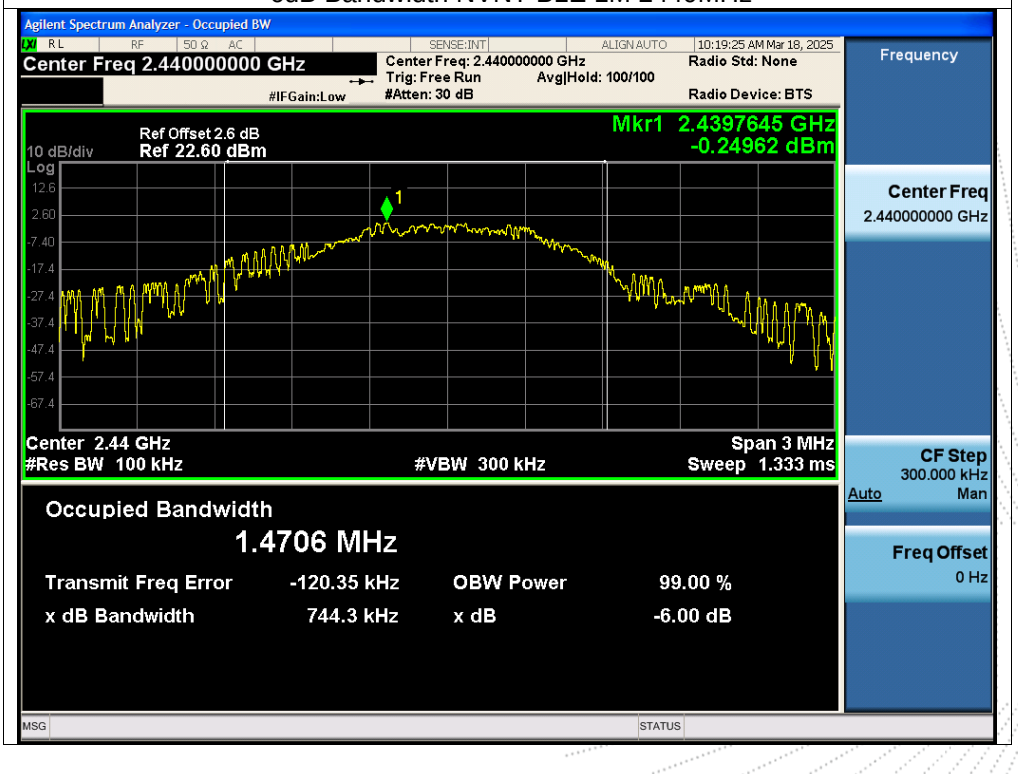

-6dB Bandwidth NVNT BLE 1M 2480MHz

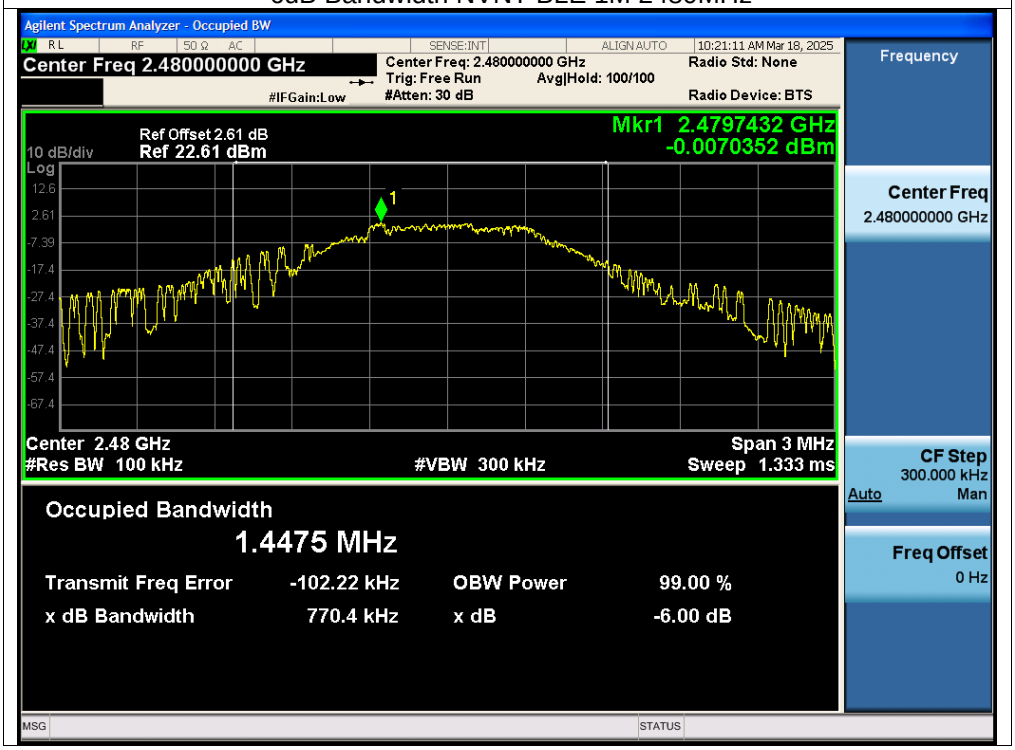

# 11. Peak Output Power Test

## 11.1 Block Diagram Of Test Setup

## 11.2 Limit

| FCC Part15 (15.247) , Subpart C | | | | |
|---|---|---|---|---|
| **Section** | **Test Item** | **Limit** | **Frequency Range (MHz)** | **Result** |
| 15.247(b)(3) | Peak Output Power | 1 watt or 30dBm | 2400-2483.5 | PASS |

## 11.3 Test Procedure

a. The EUT was directly connected to the Power meter

## 11.4 EUT Operating Conditions

The EUT tested system was configured as the statements of 4.6 Unless otherwise a special operating condition is specified in the follows during the testing.
Note: Power Spectral Density(dBm)=Reading+Cable Loss

## 11.5 Test Result

| | | | |
|---|---|---|---|
| Temperature: | 26℃ | Relative Humidity: | 54% |
| Test Mode : | GFSK | Test Voltage : | DC 3.7V |

| Condition | Mode | Frequency (MHz) | Conducted Power (dBm) | Limit (dBm) | Verdict |
|---|---|---|---|---|---|
| NVNT | BLE 1M | 2402 | 1.3 | 30 | Pass |
| NVNT | BLE 1M | 2440 | 1.53 | 30 | Pass |
| NVNT | BLE 1M | 2480 | 1.56 | 30 | Pass |

# 12. 100 KHz Bandwidth Of Frequency Band Edge

## 12.1 Block Diagram Of Test Setup

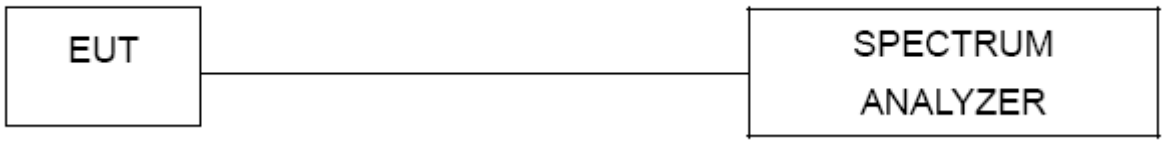


## 12.2 Limit

In any 100 kHz bandwidth outside the frequency band in which the spread spectrum intentional radiator is operating, the radio frequency power that is produced by the intentional radiator shall be at least 20 dB below that in the 100 kHz bandwidth within the band that contains the highest level of the desired power, based on either an RF conducted or a radiated measurement.

## 12.3 Test Procedure

Using the following spectrum analyzer setting:
a) Set the RBW = 100KHz.
b) Set the VBW = 300KHz.
c) Sweep time = auto couple.
d) Detector function = peak.
e) Trace mode = max hold.
f) Allow trace to fully stabilize.

## 12.4 EUT Operating Conditions

The EUT tested system was configured as the statements of 4.6 Unless otherwise a special operating condition is specified in the follows during the testing.
Note: Power Spectral Density(dBm)=Reading+Cable Loss

## 12.5 Test Result

Test Graphs

Band Edge NVNT BLE 1M 2402MHz

Band Edge NVNT BLE 1M 2402MHz Emission

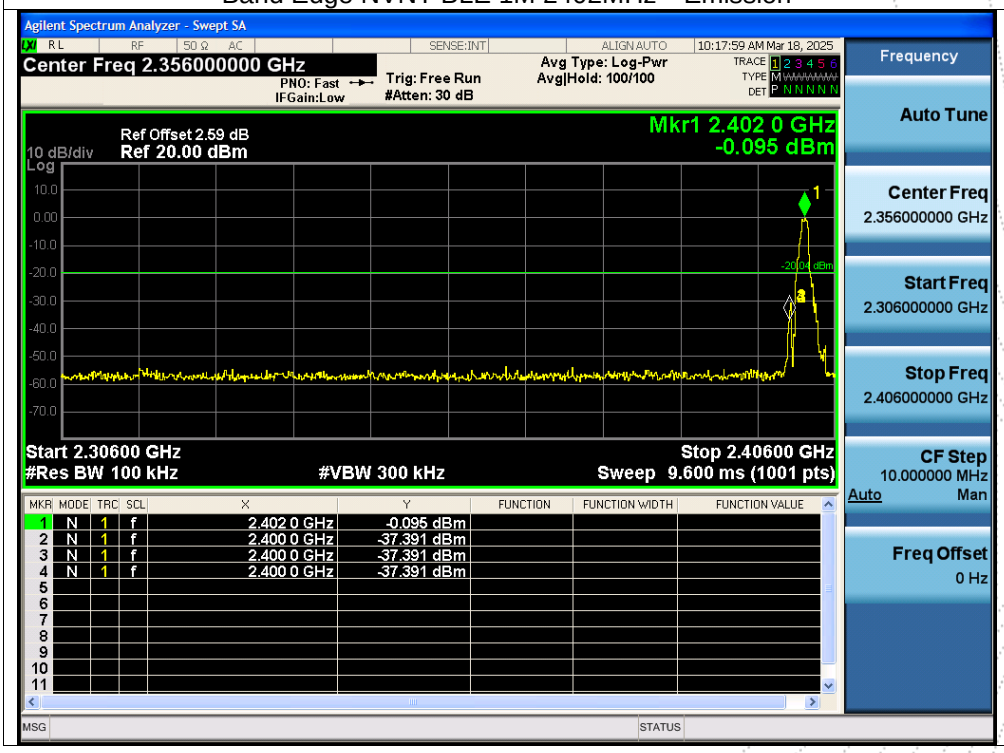

Band Edge NVNT BLE 1M 2480MHz

Band Edge NVNT BLE 1M 2480MHz Emission

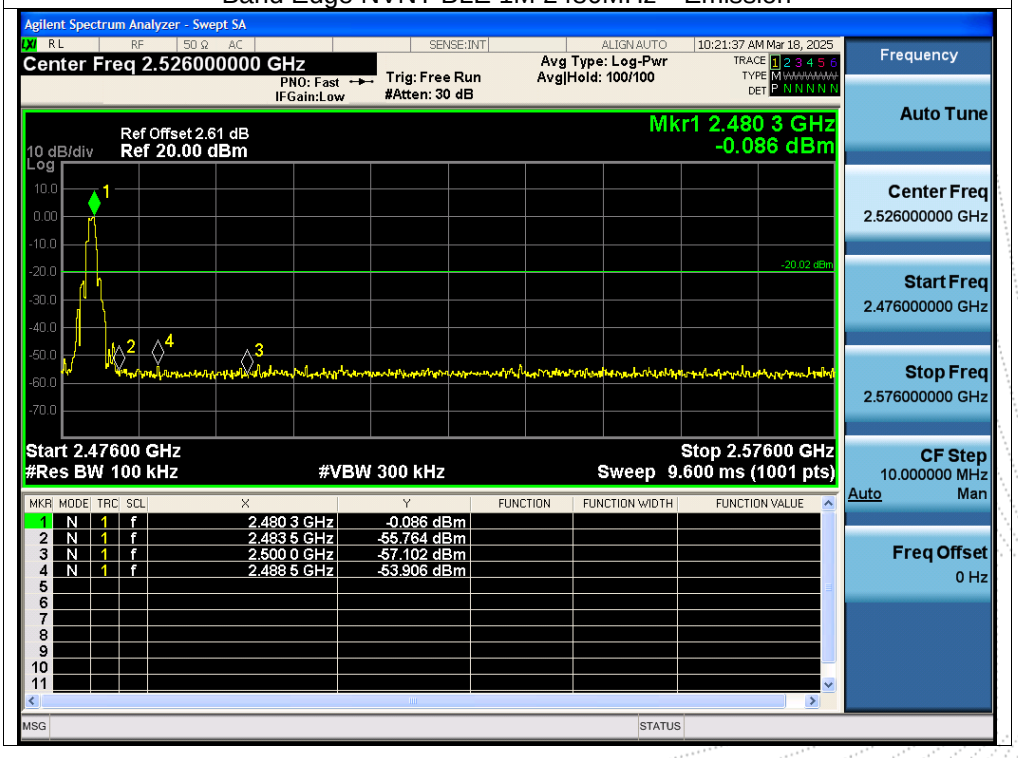

Test Graphs

Tx. Spurious NVNT BLE 1M 2402MHz

Tx. Spurious NVNT BLE 1M 2402MHz Emission

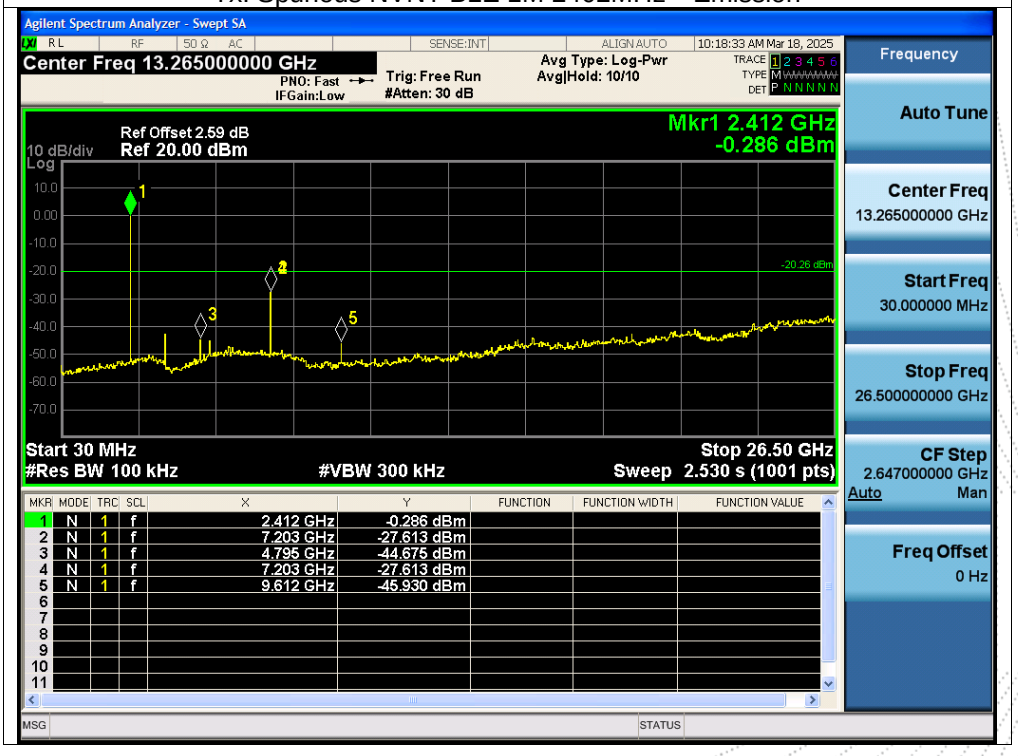

Tx. Spurious NVNT BLE 1M 2440MHz

Tx. Spurious NVNT BLE 1M 2440MHz Emission

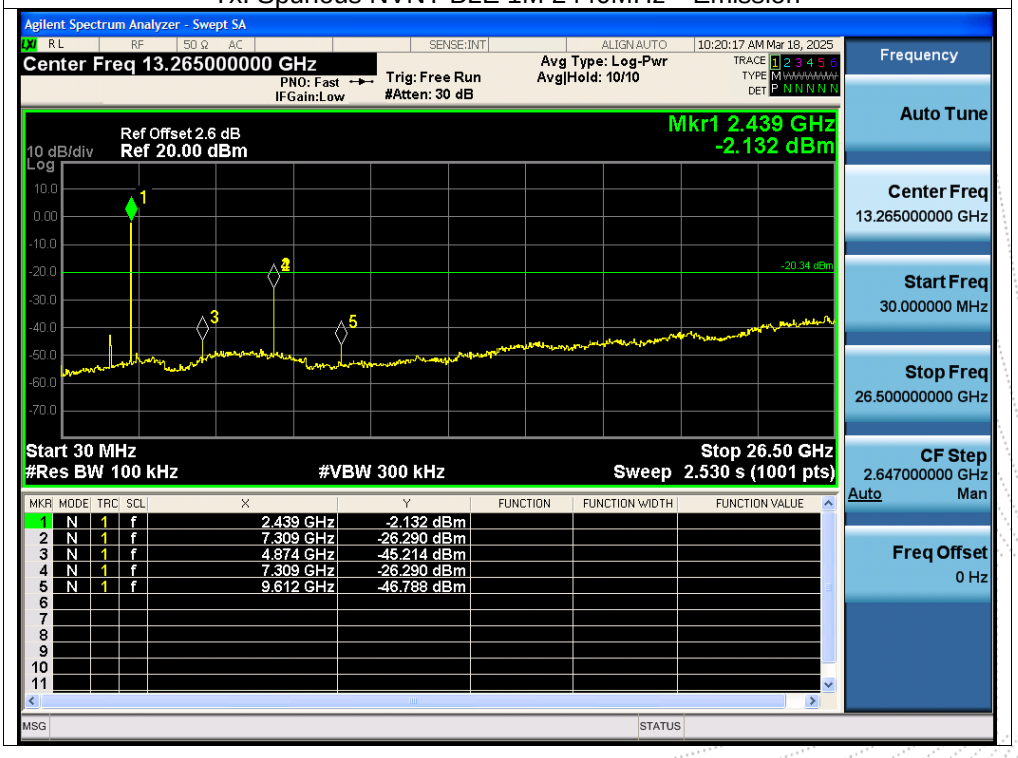

Tx. Spurious NVNT BLE 1M 2480MHz

Tx. Spurious NVNT BLE 1M 2480MHz Emission

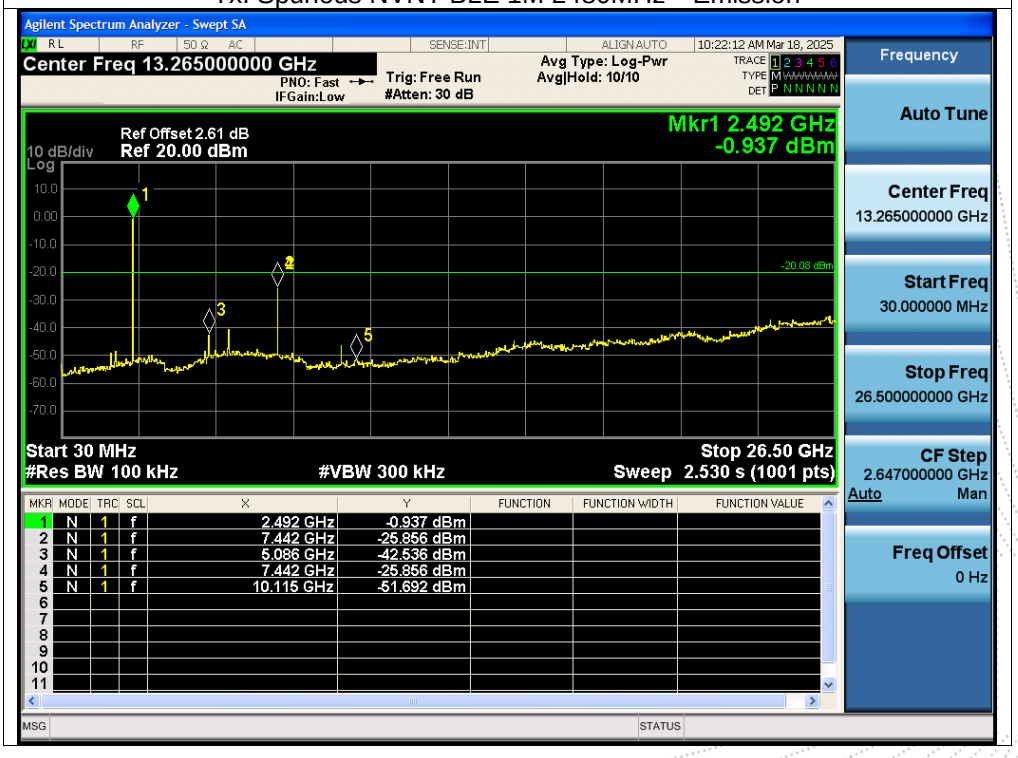

# 13. Antenna Requirement

## 13.1 Limit

15.203 requirement: For intentional device, according to 15.203: an intentional radiator shall be designed to ensure that no antenna other than that furnished by the responsible party shall be used with the device.

## 13.2 Test Result

The EUT antenna is PCB antenna, fulfill the requirement of this section.

## 14. EUT Photographs

**EUT Photo 1**

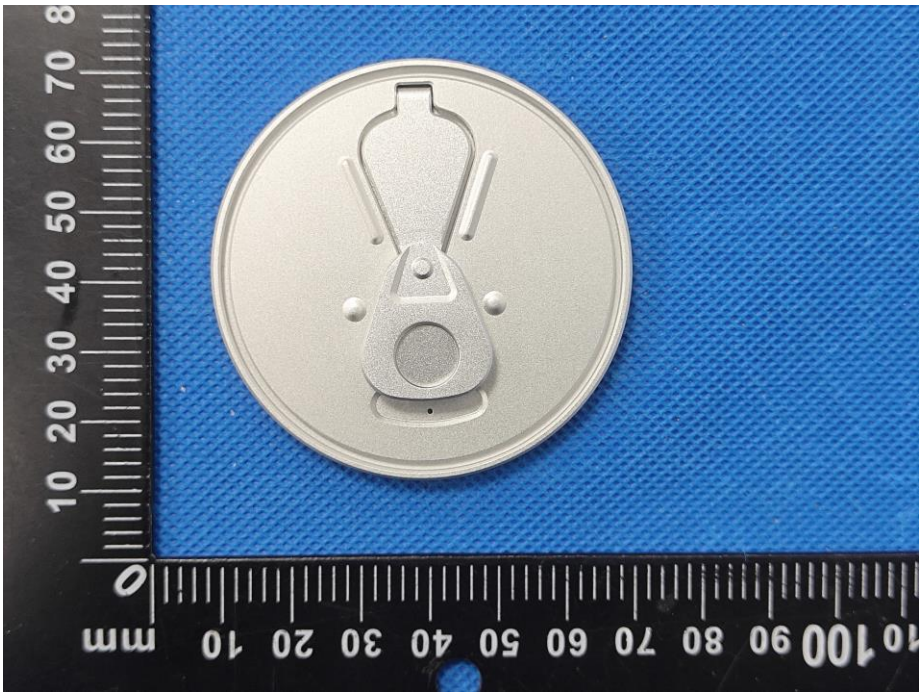

**EUT Photo 2**

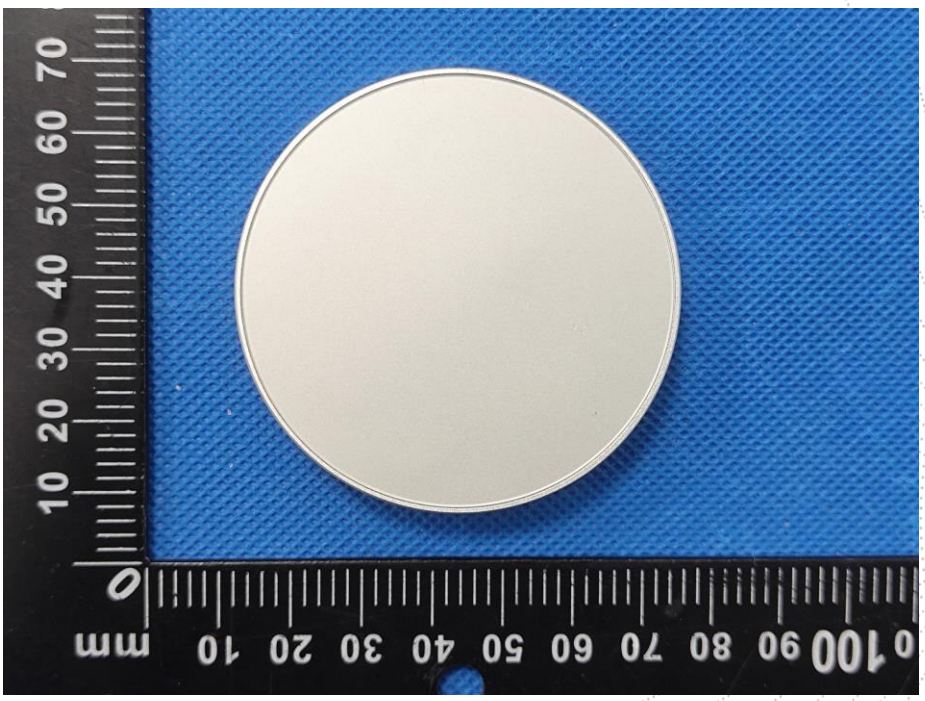

NOTE: Appendix-Photographs Of EUT Constructional Details.

## 15. EUT Test Setup Photographs

**Conducted Emissions Photo**

**Radiated Measurement Photos**

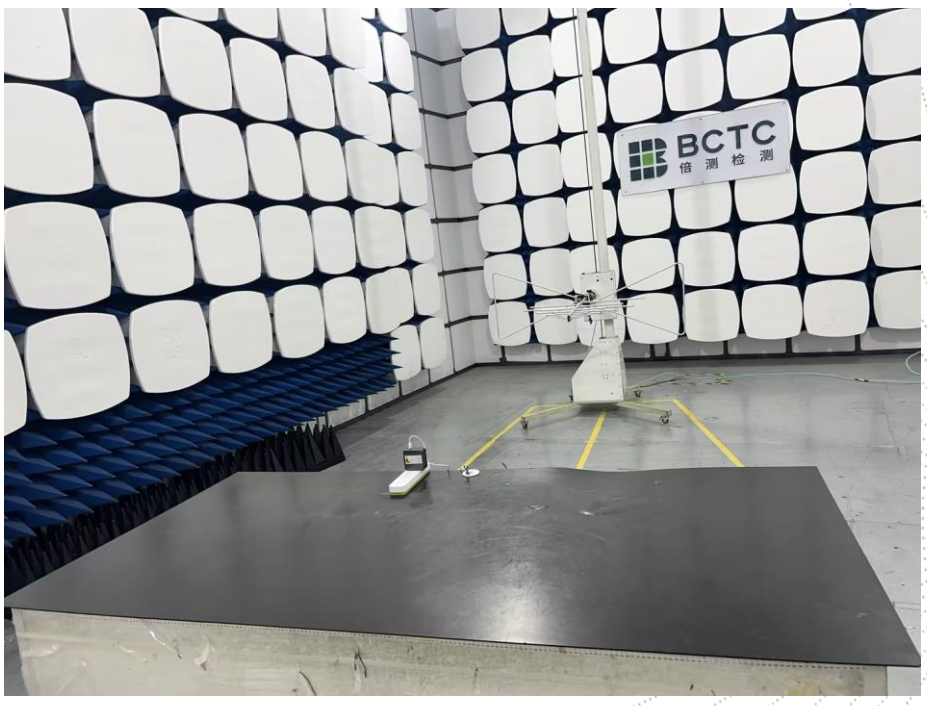

BCT
倍 测 检

# STATEMENT

1. The equipment lists are traceable to the national reference standards.

2. The test report can not be partially copied unless prior written approval is issued from our lab.

3. The test report is invalid without the "special seal for inspection and testing".

4. The test report is invalid without the signature of the approver.

5. The test process and test result is only related to the Unit Under Test.

6. Sample information is provided by the client and the laboratory is not responsible for its authenticity.

7. The quality system of our laboratory is in accordance with ISO/IEC17025.

8. If there is any objection to this test report, the client should inform issuing laboratory within 15 days from the date of receiving test report.

Address:
1-2/F., Building B, Pengzhou Industrial Park, No.158, Fuyuan 1st Road, Zhancheng, Fuhai Subdistrict, Bao'an District, Shenzhen, Guangdong, China

TEL: 400-788-9558

P.C.: 518103

FAX: 0755-33229357

Website: http://www.chnbctc.com

Consultation E-mail: bctc@bctc-lab.com.cn

Complaint/Advice E-mail: advice@bctc-lab.com.cn

※※※※※ END ※※※※※