汕头市威林电子有限公司

天线规格承认书

Antenna Specification for Approval

客户名称

Customer Name: _____

产品名称: _

Product Name: 2.4G铜管天线 全长150黑色

客户型号:

Product Name: _____

产品料号:

Part NO.: C113H-BT44-11129-150R

制 表:

Write By: 周 敏

日 期:

Issued Date: 2019-11-13

Manufacturer: Shantou Weilin Electronics Co., LTD
Address: No. 5, 21, East of Huxing 4th Road, Kunmei Management District, Fengxiang Sub-district, Chenghai District, Shantou City

L=150MM,φ1.13黑色铜管天线

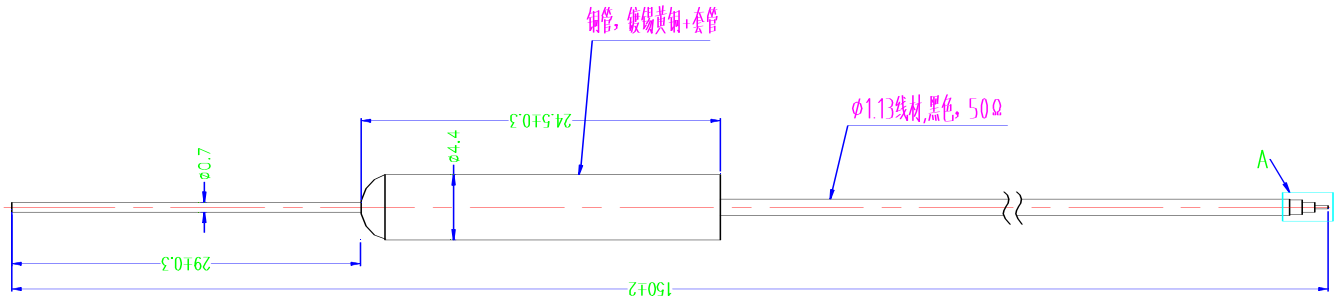

规格说明:

1.频率范围: 2.4GHz-2.5GHz;

2.功率增益: 2.0dBi。

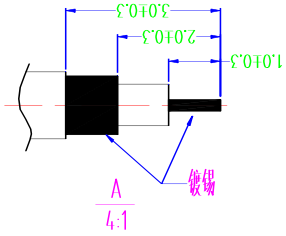

铜管天线			
C113H-BT44-11129-150R			
mm	2.5:1	L<30 ±0.10 30<L<100 ±0.15 L>100 ±0.20	X.XX ±0.1° X.X ±0.2°
黄	19-10-21		01

汕头市威林电子有限公司

Product Specification

A. Electrical Characteristics

Frequency 2400MHz ~2500MHz

VSWR <2.0

Efficiency >75%

Impedance 50 Ohm

Polarization Line

Gain 2.89dBi

B. Material & Mechanical Characteristics

Material of Radiator Cu

Cable Type 1.13 黑色

Connector Type : NO

Dimension

C. Environmental

Operation Temperature - 30 °C ~ + 80 °C

Storage Temperature - 30 °C ~ + 85 °C

Test Equipment & Conditions

1. Network Analyzers :

Agilent 8753D 5071B

2. Communications Test Set:

Agilent E5515C

3. 3D Chamber Test System

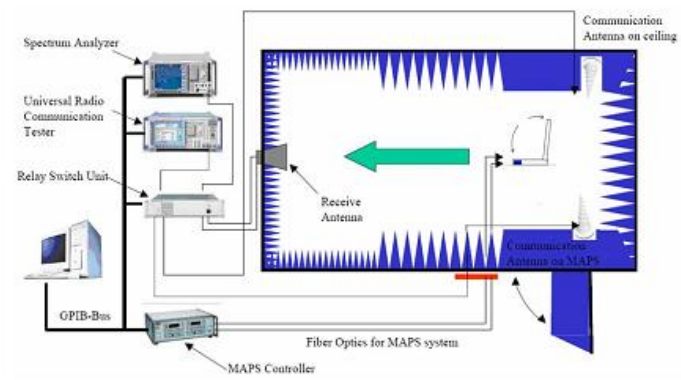

(Testing by 3D anechoic chamber)

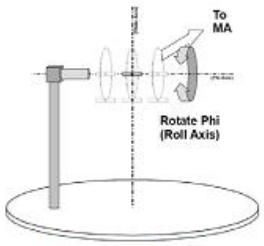

Phi axis test

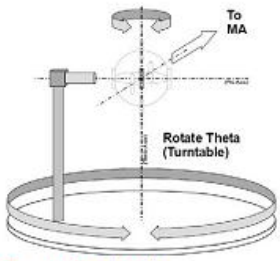

Theta axis test

Effiency &Gain

Freq (MHz)	Effi (%%)	Gain (dBi)
2400	76.85	2.42
2410	74.86	2.46
2420	74.78	2.81
2430	72.59	2.86
2440	66.69	2.53
2450	72.16	2.63
2460	71.67	2.89
2470	72.96	2.80
2480	72.45	2.70
2490	68.43	2.75
2500	67.48	2.39

S11

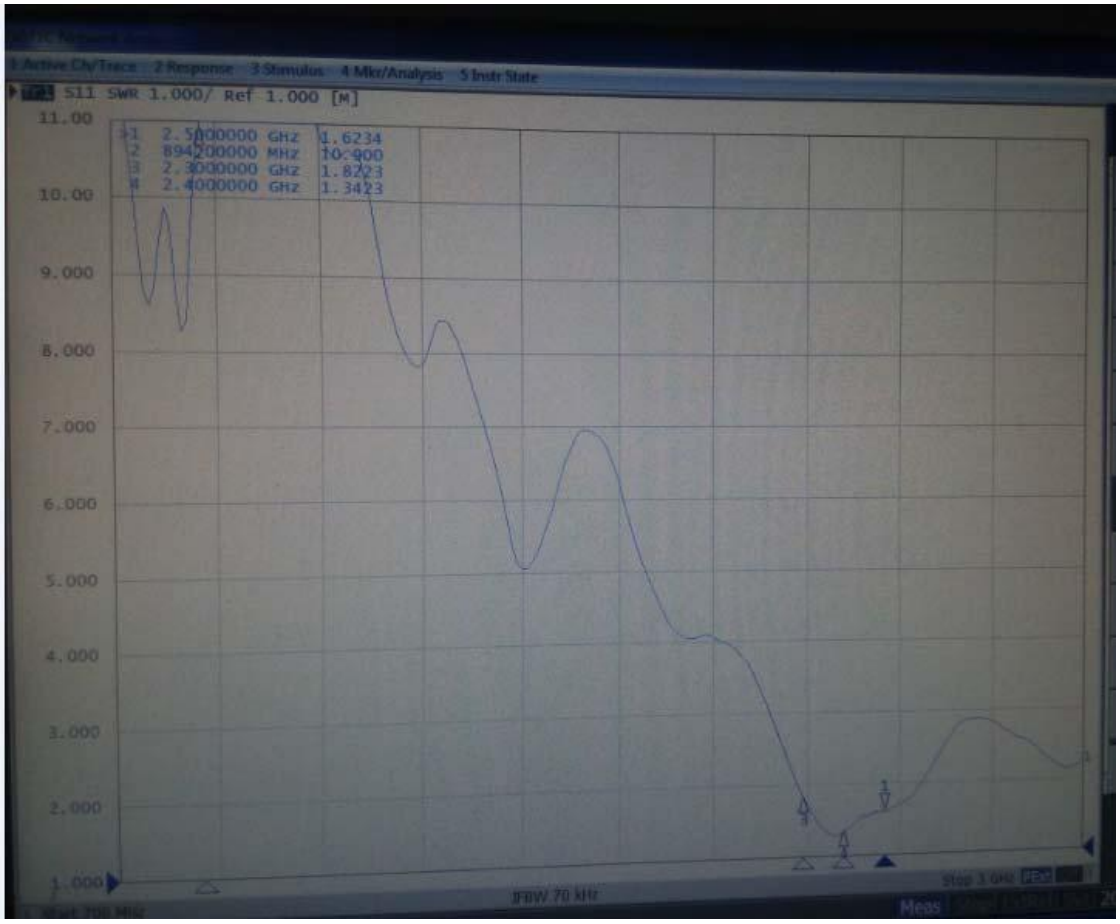

Radiation Pattern:

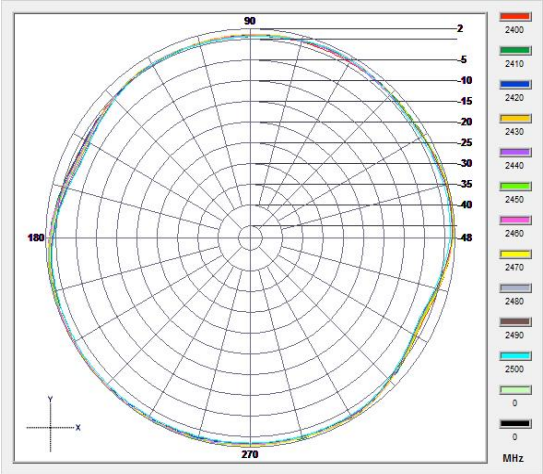

XY

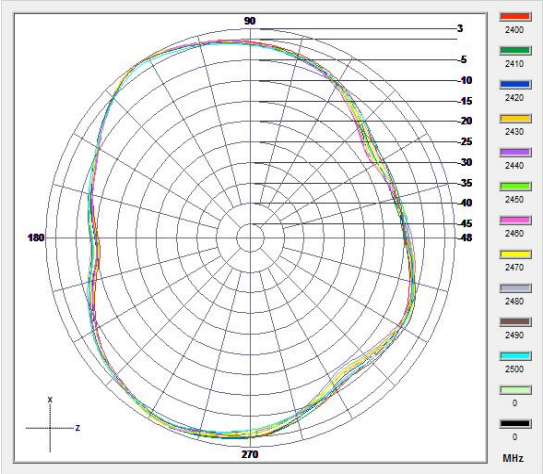

XZ

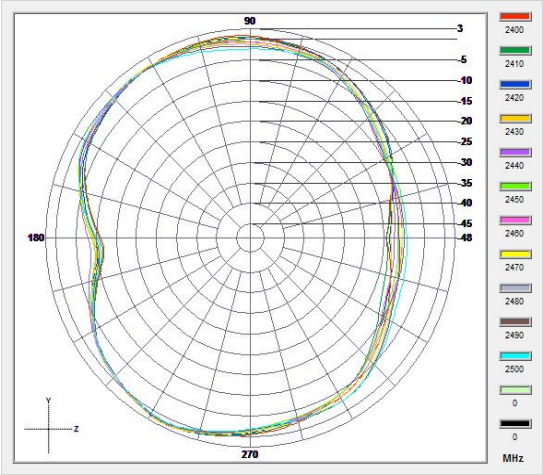

YZ
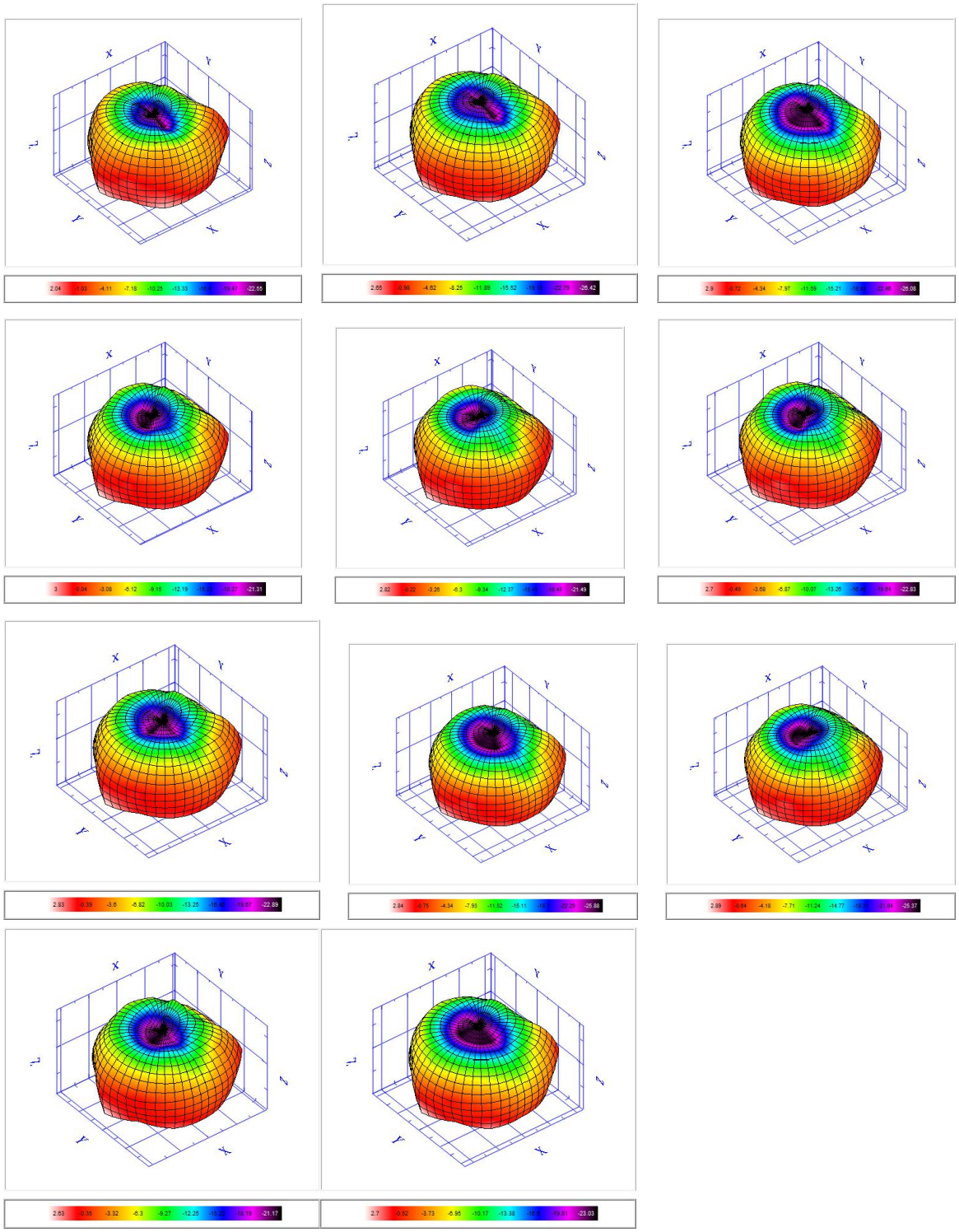
2400 2410 2420 2430 2440 2450 2460 2470 2480 2490 2500