# Size: 288*91mm

Wireless Headset

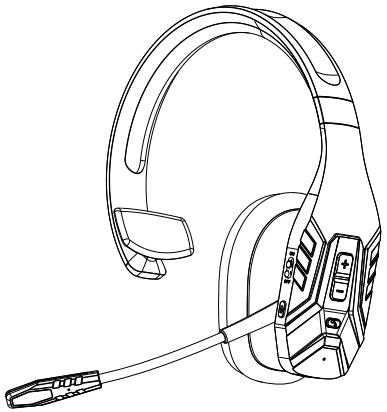

## User Manual

We are appreciated for purchasing our wireless headset.
This guide contains instructions for setting up and using your headset easily.

## Package List

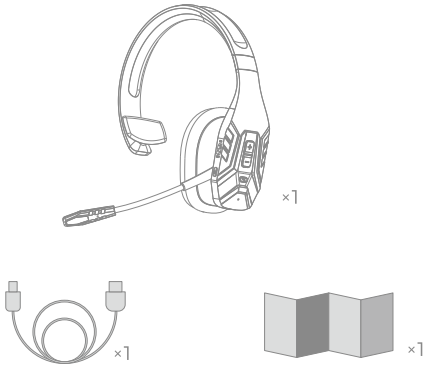


## Diagram

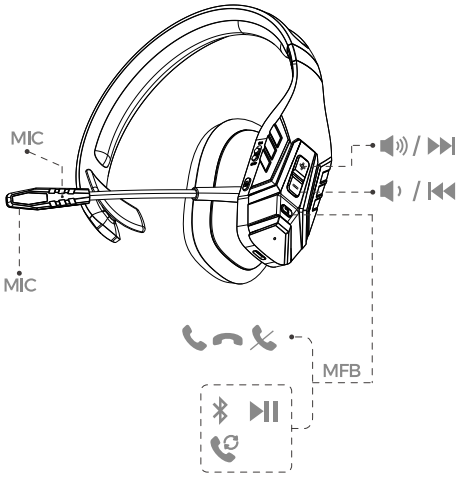


## Power ON / OFF

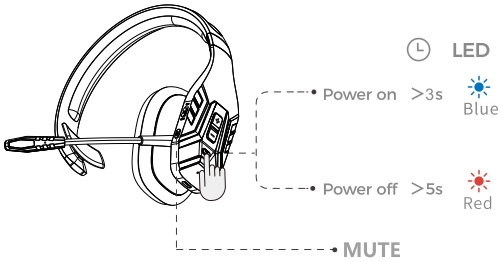


1. Enable pairing model: Hold the multi-function button for 3s after power on.
2. Power on: Turn the power button to ON state.
3. Power off: Turn the power button to OFF state.
4. Recover default settings: When charging, hold the Multi-function Button for about 4s till the blue indicator flashesto recover default settings.

## How To Pair

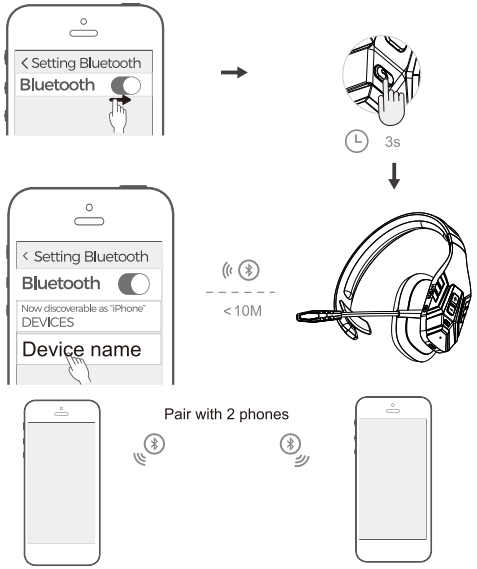


## Play / Pause / Answer / Hang Up / Redail / Reject / Siri / Mute

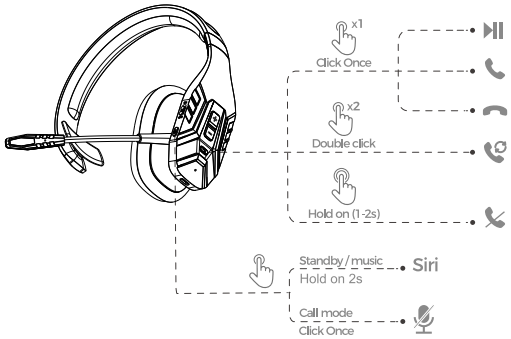


## Charge Battery

Output : DC 5V

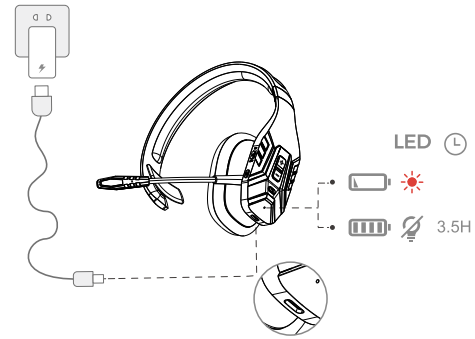


## Correct Disposal of This Product

( Waste Electrical& Electronic Equipment )
This Marking shown on the product or its literature, indicate that it should not be disposed with other household wastes at the end of its working life.

To prevent possible harm to the environment or human health from uncontrolled waste disposal, please separate this from other types of wastes and recycle it responsibly to promote the sustainable reuse of material resources.Household user should contact either the retailer where they purchased this product, or their local government office, for details of where and how they can take this item for environmentally safe recycling.

Business users should contact their supplier and check the terms and conditions of the purchase contact. This product should not be mixed with other commercial wastes for disposal.

## Notification

1. Please fully charge it if it was going to lay idle for a long time and place it in a cool and dry place. Please recharge it each 2 months for storage.
2. Please fully charge it for the first use.

FCC Warnning:

This equipment has been tested and found to comply with the limits for a Class B digital device, pursuant to part 15 of the FCC Rules. These limits are designed to provide reasonable protection againstharmful interference in a residential installation. This equipment generates, uses and can radiateradio frequency energy and, if not installed and used in accordance with the instructions, maycause harmful interference to radio communications. However, there is no guarantee thatinterference will not occur in a particular installation. If this equipment does cause harmfulinterference to radio or television reception, which can be determined by turning the equipmentoff and on, the user is encouraged to try to correct the interference by one or more of thefollowing measures:

- Reorient or relocate the receiving antenna.
- Increase the separation between the equipment and receiver.
- Connect the equipment into an outlet on a circuit different from that to which the receiver is connected.
- Consult the dealer or an experienced radio/TV technician for help.

Caution: Any changes or modifications to this device not explicitly approved by manufacturer could void your authority to operate this equipment.

This device complies with part 15 of the FCC Rules. Operation is subject to the following two conditions:

(1)This device may not cause harmful interference, and (2) this device must accept any interference received, including interference that may cause undesired operation.

This equipment complies with FCC radiation exposure limits set forth for an uncontrolled environment. This equipment should be installed and operated with minimum distance 0cm between the radiator and your body.