TEST REPORT

Product	:	Projector
Trade mark	:	N/A
Model/Type reference	:	AX20, AX22, AX24, AX26, AD2, AD4, AD12, AD14
Serial Number	:	N/A
Report Number	:	EED32R80287203
FCC ID	:	2BOK8-AX20
Date of Issue	:	May 21, 2025
Test Standards	:	47 CFR Part 15 Subpart E
Test result	:	PASS

Prepared for:

Shenzhen IFERRET Technology Co., Ltd
Room 601, Building A8, Tianrui Industrial Park, Fuyuan Road, Fuhai Street, Baoan District, Shenzhen，Guangdong

Prepared by:

Centre Testing International Group Co., Ltd.
Hongwei Industrial Zone, Bao'an 70 District, Shenzhen, Guangdong, China
TEL: +86-755-3368 3668
FAX: +86-755-3368 3385

Compiled by:	Keven Tan	Reviewed by:	Frazer Li
	Keven Tan		Frazer Li
Approved by:	Aaron Ma	Date:	May 21, 2025
	Aaron Ma		

Check No.: 4714050325

1 Content

1 CONTENT 2
2 VERSION 3
3 TEST SUMMARY 4
4 GENERAL INFORMATION 5
4.1 CLIENT INFORMATION 5
4.2 GENERAL DESCRIPTION OF EUT 5
4.3 TEST CONFIGURATION 7
4.4 TEST ENVIRONMENT 7
4.5 DESCRIPTION OF SUPPORT UNITS 8
4.6 TEST LOCATION 8
4.7 DEVIATION FROM STANDARDS 8
4.8 ABNORMALITIES FROM STANDARD CONDITIONS 8
4.9 OTHER INFORMATION REQUESTED BY THE CUSTOMER 8
4.10 MEASUREMENT UNCERTAINTY (95% CONFIDENCE LEVELS, K=2) 8
5 EQUIPMENT LIST 9
6 RADIO TECHNICAL REQUIREMENTS SPECIFICATION 12
6.1 ANTENNA REQUIREMENT 12
6.2 AC POWER LINE CONDUCTED EMISSIONS 13
6.3 MAXIMUM CONDUCTED OUTPUT POWER 17
6.4 6DB EMISSON BANDWIDTH 18
6.5 26DB EMISSION BANDWIDTH AND 99% OCCUPIED BANDWIDTH 19
6.6 MAXIMUM POWER SPECTRAL DENSITY 20
6.7 FREQUENCY STABILITY 21
6.8 RADIATED EMISSION 22
6.9 RADIATED EMISSION WHICH FALL IN THE RESTRICTED BANDS 32
7 APPENDIX A 77
PHOTOGRAPHS OF TEST SETUP 78
PHOTOGRAPHS OF EUT CONSTRUCTIONAL DETAILS 81

2 Version

Version No.	Date	Description
00	May 21, 2025	Original

3 Test Summary

Test Item	Test Requirement	Result
Antenna Requirement	47 CFR Part 15 Subpart C Section 15.203	PASS
AC Power Line Conducted Emission	47 CFR Part 15 Subpart E Section 15.407 (b)(6)	PASS
Duty Cycle	47 CFR Part 15 Subpart E Section 15.407	PASS
Maximum Conducted Output Power	47 CFR Part 15 Subpart E Section 15.407 (a)	PASS
26dB Emission Bandwidth	47 CFR Part 15 Subpart E Section 15.407 (a)	PASS
99% Occupied Bandwidth	\	PASS
6dB Emission Bandwidth	47 CFR Part 15 Subpart E Section 15.407 (e)	PASS
Maximum Power Spectral Density	47 CFR Part 15 Subpart E Section 15.407 (a)	PASS
Frequency stability	47 CFR Part 15 Subpart E Section 15.407 (g)	PASS
Radiated Emissions	47 CFR Part 15 Subpart E Section 15.407 (b)	PASS
Radiated Emissions which fall in the restricted bands	47 CFR Part 15 Subpart E Section 15.407 (b)	PASS

Remark:
Model No.: AX20, AX22, AX24, AX26, AD2, AD4, AD12, AD14
Only the model AX20 was tested. They have same electrical, PCB and layout, only the model name are different for marketing requirements.

4 General Information

4.1 Client Information

Applicant:	Shenzhen IFERRET Technology Co., Ltd
Address of Applicant:	Room 601, Building A8, Tianrui Industrial Park, Fuyuan Road, Fuhai Street, Baoan District, Shenzhen, Guangdong
Manufacturer:	Shenzhen IFERRET Technology Co., Ltd
Address of Manufacturer:	Room 601, Building A8, Tianrui Industrial Park, Fuyuan Road, Fuhai Street, Baoan District, Shenzhen, Guangdong
Factory :	Mito Technology (Shenzhen) Co., Ltd.
Address of Factory :	Second Floor, Building 5, Chuangjian II Industrial Zone, Yingrenshi Community, Shiyan Street, Shenzhen

4.2 General Description of EUT

Product Name:	Projector	
Model No.:	AX20, AX22, AX24, AX26, AD2, AD4, AD12, AD14	
Test Model No.:	AX20	
Trade mark:	N/A	
Product Type:	☐ Mobile ☒ Portable ☒ Fixed Location	
Type of Modulation:	IEEE 802.11a: OFDM (BPSK, QPSK, 16QAM, 64QAM) IEEE 802.11n(HT20/HT40): OFDM (BPSK, QPSK, 16QAM, 64QAM) IEEE 802.11ac(VHT20/VHT40): OFDM (BPSK, QPSK, 16QAM, 64QAM, 256QAM) IEEE 802.11ax(HE20/HE40): OFDMA (BPSK, QPSK, 16QAM, 64QAM, 256QAM,1024QAM)	
Operating Frequency	U-NII-1: 5150-5250MHz U-NII-3: 5745-5825MHz	
Antenna Type:	FPC antenna	
Antenna Gain:	U-NII-1: 5.71dBi U-NII-3: 4.46dBi	
Power Supply:	Adapter:	DC 12V
Test voltage:	DC 12V	
Sample Received Date:	Mar. 17, 2025	
Sample tested Date:	Mar. 17, 2025 to Apr. 27, 2025	

Operation Frequency each of channel

802.11a/802.11n/802.11ac/802.11ax (20MHz) Frequency/Channel Operations:

U-NII-1		U-NII-3	
Channel	Frequency(MHz)	Channel	Frequency(MHz)
36	5180	149	5745
40	5200	153	5765
44	5220	157	5785
48	5240	161	5805
-	-	165	5825

802.11n/802.11ac/802.11ax (40MHz) Frequency/Channel Operations:

U-NII-1		U-NII-3	
Channel	Frequency(MHz)	Channel	Frequency(MHz)
38	5190	151	5755
46	5230	159	5795

Note:

In section 15.31(m), regards to the operating frequency range over 10 MHz, the lowest frequency, the middle frequency, and the highest frequency of channel were selected to perform the test, and the selected channel see below:

4.3 Test Configuration

EUT Test Software Settings:	
Software:	Adb.exe
EUT Power Grade:	Default
Use test software to set the lowest frequency, the middle frequency and the highest frequency keep transmitting of the EUT.	
Test Mode:	
We have verified the construction and function in typical operation. All the test modes were carried out with the EUT in transmitting operation, which was shown in this test report and defined as follows:	
Per-scan all kind of data rate in lowest channel, and found the follow list which it was worst case.	
Mode	Data rate
802.11a	6 Mbps
802.11n(HT20)	MCS0
802.11n(HT40)	MCS0
802.11ac(VHT20)	MCS0
802.11ac(VHT40)	MCS0
802.11ax(VHT20)	MCS0
802.11ax(VHT40)	MCS0

4.4 Test Environment

Operating Environment:		
Radiated Spurious Emissions:		
Temperature:	22~25.0 °C	
Humidity:	50~55 % RH	
Atmospheric Pressure:	1010mbar	
Conducted Emissions:		
Temperature:	22~25.0 °C	
Humidity:	50~55 % RH	
Atmospheric Pressure:	1010mbar	
RF Conducted:		
Humidity:	50~55 % RH	
Atmospheric Pressure:	1010mbar	
Temperature:	NT (Normal Temperature)	22~25.0 °C
	LT (Low Temperature)	0 °C
	HT (High Temperature)	55.0 °C
Working Voltage of the EUT:	NV (Normal Voltage)	12V
	LV (Low Voltage)	10.8V
	HV (High Voltage)	13.2V

4.5 Description of Support Units

The EUT has been tested with associated equipment below.

1) Support equipment

Description	Manufacturer	Model No.	Certification	Supplied by
Netbook	Dell	P77F	FCC&CE	CTI

4.6 Test Location

All tests were performed at:

Centre Testing International Group Co., Ltd
Building C, Hongwei Industrial Park Block 70, Bao'an District, Shenzhen, China
Telephone: +86 (0) 755 33683668 Fax:+86 (0) 755 33683385
No tests were sub-contracted.
FCC Designation No.: CN1164

4.7 Deviation from Standards

None.

4.8 Abnormalities from Standard Conditions

None.

4.9 Other Information Requested by the Customer

None.

4.10 Measurement Uncertainty (95% confidence levels, k=2)

No.	Item	Measurement Uncertainty
1	Radio Frequency	7.9×10^{-8}
2	RF power, conducted	0.46dB (30MHz-1GHz)
		0.55dB (1GHz-18GHz)
3	Radiated Spurious emission test	3.3dB (9kHz-30MHz)
		4.5dB (30MHz-1GHz)
		4.8dB (1GHz-18GHz)
		3.4dB (18GHz-40GHz)
4	Conduction emission	3.5dB (9kHz to 150kHz)
		3.1dB (150kHz to 30MHz)
5	Temperature test	0.64°C
6	Humidity test	3.8%
7	DC power voltages	0.026%

5 Equipment List

RF test system					
Equipment	**Manufacturer**	**Model No.**	**Serial Number**	**Cal. Date (mm-dd-yyyy)**	**Cal. Due date (mm-dd-yyyy)**
Communication test set	R&S	CMW500	107929	06-26-2024	06-25-2025
Signal Generator	R&S	SMBV100A	1407.6004K02-262149-CV	09-02-2024	09-01-2025
Spectrum Analyzer	R&S	FSV40	101200	07-18-2024	07-17-2025
RF control unit(power unit)	MWRF-test	MW100-RFCB	MW220620CTI-42	06-25-2024	06-24-2025
High-low temperature test chamber	Dong Guang Qin Zhuo	LK-80GA	QZ20150611879	11-30-2024	11-29-2025
Temperature/ Humidity Indicator	biaozhi	HM10	1804186	05-29-2024	05-28-2025
BT&WI-FI Automatic test software	MWRF-test	MTS 8310	V2.0.0.0	---	---
Spectrum Analyzer	R&S	FSV3044	101509	02-14-2025	02-13-2026

Conducted disturbance Test					
Equipment	**Manufacturer**	**Model No.**	**Serial Number**	**Cal. date (mm-dd-yyyy)**	**Cal. Due date (mm-dd-yyyy)**
Receiver	R&S	ESCI	100435	04-18-2024 04-08-2025	04-17-2025 04-07-2026
Temperature/ Humidity Indicator	Defu	TH128	/	04-25-2024 03-31-2025	04-24-2025 03-30-2026
LISN	R&S	ENV216	100098	09-19-2024	09-18-2025
Barometer	changchun	DYM3	1188	---	---
Test software	Fara	EZ-EMC	EMC-CON 3A1.1	---	---
Capacitive voltage probe	Schwarzbeck	CVP 9222C	00124	06-18-2024	06-17-2025

ISN	TESEQ	ISN T800	30297	12-05-2024	12-04-2025
3M Semi-anechoic Chamber (2)- Radiated disturbance Test					
Equipment	**Manufacturer**	**Model No.**	**Serial Number**	**Cal. date (mm-dd-yyyy)**	**Cal. Due date (mm-dd-yyyy)**
3M Chamber & Accessory Equipment	TDK	SAC-3	---	05/22/2022	05/21/2025
Receiver	R&S	ESCI7	100938-003	09/07/2024	09/06/2025
Spectrum Analyzer	R&S	FSV40	101200	07/18/2024	07/17/2025
TRILOG Broadband Antenna	schwarzbeck	VULB 9163	9163-618	05/22/2022	05/21/2025
Loop Antenna	Schwarzbeck	FMZB 1519B	1519B-076	04/16/2024 04/07/2025	04/15/2025 04/06/2026
Microwave Preamplifier	Tonscend	EMC051845SE	980380	12/05/2024	12/04/2025
Horn Antenna	A.H.SYSTEMS	SAS-574	374	07/02/2023	07/01/2026
Horn Antenna	ETS-LINGREN	BBHA 9120D	9120D-1869	04/16/2024 04/07/2025	04/15/2025 04/06/2026
Preamplifier	Agilent	11909A	12-1	03/03/2025	03/02/2026
Preamplifier	CD	PAP-1840-60	6041.6042	06/19/2024	06/18/2025
Test software	Fara	EZ-EMC	EMEC-3A1-Pre	---	---
Cable line	Fulai(7M)	SF106	5219/6A	05/22/2022	05/21/2025
Cable line	Fulai(6M)	SF106	5220/6A	05/22/2022	05/21/2025
Cable line	Fulai(3M)	SF106	5216/6A	05/22/2022	05/21/2025
Cable line	Fulai(3M)	SF106	5217/6A	05/22/2022	05/21/2025

3M full-anechoic Chamber					
Equipment	**Manufacturer**	**Model No.**	**Serial Number**	**Cal. Date (mm-dd-yyyy)**	**Cal. Due date (mm-dd-yyyy)**
Fully Anechoic Chamber	TDK	FAC-3	---	01-09-2024	01-08-2027
Receiver	Keysight	N9038A	MY57290136	01-04-2025	01-03-2026
Spectrum Analyzer	Keysight	N9020B	MY57111112	01-14-2025	01-13-2026
Spectrum Analyzer	Keysight	N9030B	MY57140871	01-14-2025	01-13-2026
TRILOG Broadband Antenna	Schwarzbeck	VULB 9163	9163-1148	04-28-2024 04-12-2025	04-27-2025 04-11-2026
Horn Antenna	Schwarzbeck	BBHA 9170	9170-832	04-16-2024 04-12-2025	04-15-2025 04-11-2026
Horn Antenna	ETS-LINDGREN	3117	57407	07-03-2024	07-02-2025
Preamplifier	EMCI	EMC001330	980563	03-03-2025	03-02-2026
Preamplifier	Tonscend	TAP-011858	AP21B806112	07-18-2024	07-17-2025
Preamplifier	Tonscend	EMC051845SE	980380	12-05-2024	12-04-2025
Communication test set	R&S	CMW500	102898	01-04-2025	01-03-2026
Temperature/ Humidity Indicator	biaozhi	GM1360	EE1186631	04-07-2024 03-31-2025	04-06-2025 03-30-2026
RSE Automatic test software	JS Tonscend	JS36-RSE	V4.0.0.0	---	---
Cable line	Times	SFT205-NMSM-2.50M	394812-0001	01-09-2024	01-08-2027
Cable line	Times	SFT205-NMSM-2.50M	394812-0002	01-09-2024	01-08-2027
Cable line	Times	SFT205-NMSM-2.50M	394812-0003	01-09-2024	01-08-2027
Cable line	Times	SFT205-NMSM-2.50M	393495-0001	01-09-2024	01-08-2027
Cable line	Times	EMC104-NMNM-1000	SN160710	01-09-2024	01-08-2027
Cable line	Times	SFT205-NMSM-3.00M	394813-0001	01-09-2024	01-08-2027
Cable line	Times	SFT205-NMNM-1.50M	381964-0001	01-09-2024	01-08-2027
Cable line	Times	SFT205-NMSM-7.00M	394815-0001	01-09-2024	01-08-2027
Cable line	Times	HF160-KMKM-3.00M	393493-0001	01-09-2024	01-08-2027

6 Radio Technical Requirements Specification

6.1 Antenna Requirement

Standard requirement:	47 CFR Part 15C Section 15.203
15.203 requirement: An intentional radiator shall be designed to ensure that no antenna other than that furnished by the responsible party shall be used with the device. The use of a permanently attached antenna or of an antenna that uses a unique coupling to the intentional radiator, the manufacturer may design the unit so that a broken antenna can be replaced by the user, but the use of a standard antenna jack or electrical connector is prohibited.	
EUT Antenna:	Please see Internal photos
The antenna is FPC antenna. The best case gain of the antenna is: UNII-1: 5.71dBi U-NII-3: 4.46dBi	

6.2 AC Power Line Conducted Emissions

Test Requirement:	47 CFR Part 15C Section 15.207
Test Method:	ANSI C63.10: 2013
Test Frequency Range:	150kHz to 30MHz
Receiver setup:	RBW=9 kHz, VBW=30 kHz, Sweep time=auto
Limit:	

Frequency range (MHz)	Limit (dBuV)	
	Quasi-peak	Average
0.15-0.5	66 to 56*	56 to 46*
0.5-5	56	46
5-30	60	50

* Decreases with the logarithm of the frequency.

Test Setup:

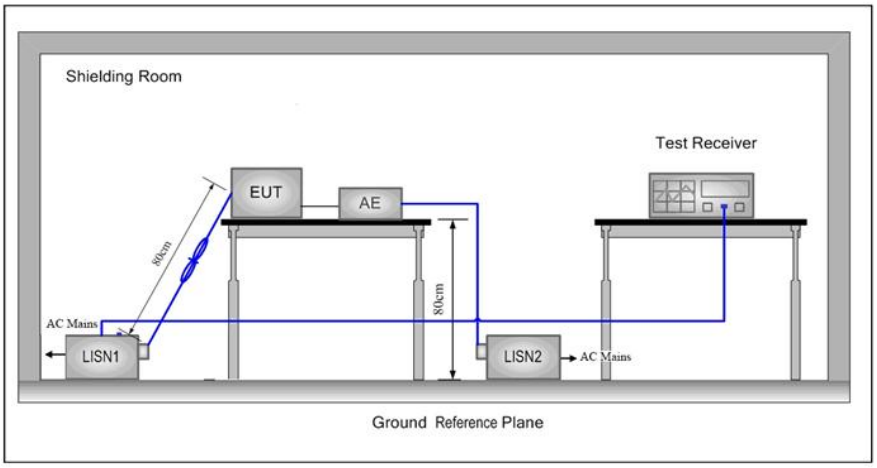

Test Procedure:

1) The mains terminal disturbance voltage test was conducted in a shielded room.
2) The EUT was connected to AC power source through a LISN 1 (Line Impedance Stabilization Network) which provides a 50Ω/50μH + 5Ω linear impedance. The power cables of all other units of the EUT were connected to a second LISN 2, which was bonded to the ground reference plane in the same way as the LISN 1 for the unit being measured. A multiple socket outlet strip was used to connect multiple power cables to a single LISN provided the rating of the LISN was not exceeded.
3) The tabletop EUT was placed upon a non-metallic table 0.8m above the ground reference plane. And for floor-standing arrangement, the EUT was placed on the horizontal ground reference plane.
4) The test was performed with a vertical ground reference plane. The rear of the EUT shall be 0.4 m from the vertical ground reference plane. The vertical ground reference plane was bonded to the horizontal ground reference plane. The LISN 1 was placed 0.8 m from the boundary of the unit under test and bonded to a ground reference plane for LISNs mounted on top of the ground reference plane. This distance was between the closest points of the LISN 1 and the EUT. All other units of the EUT and associated equipment was at least 0.8 m from the LISN 2.
5) In order to find the maximum emission, the relative positions of equipment and all of the interface cables must be changed according to

	ANSI C63.10: 2013 on conducted measurement.
Test Mode:	All modes were tested, only the worst case was recorded in the report.
Test Results:	Pass

Measurement Data

Live line:

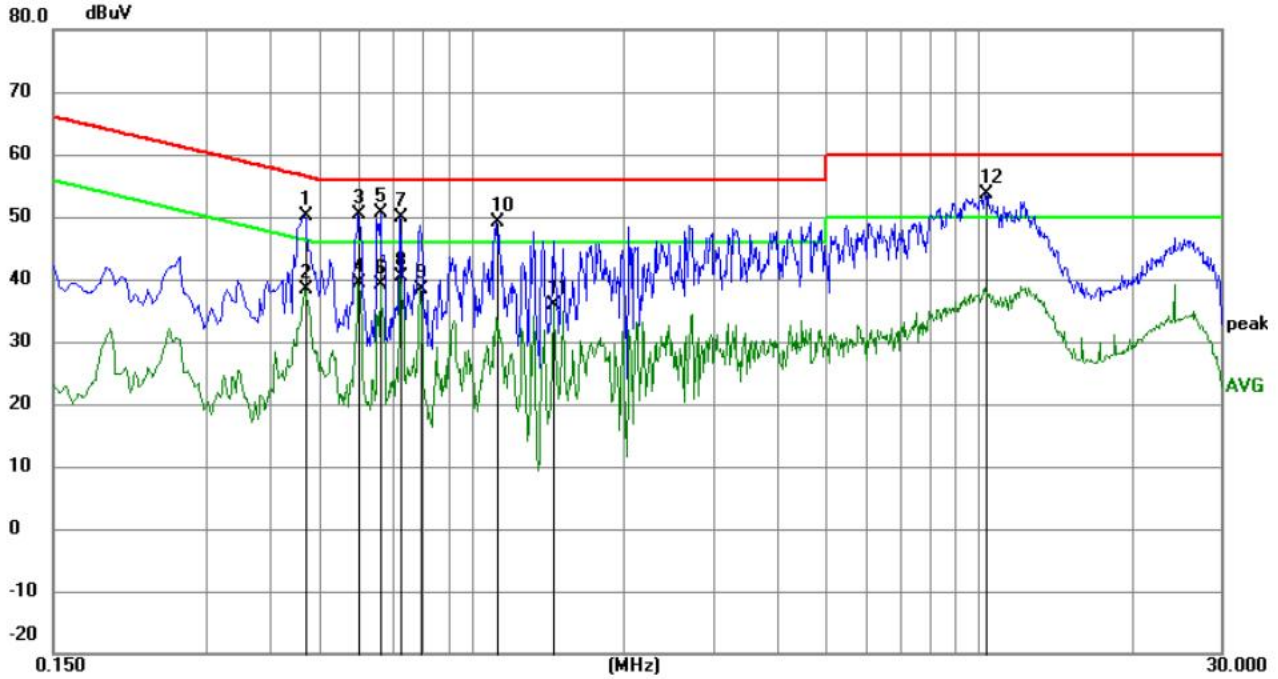

No.	Mk.	Freq.	Reading Level	Correct Factor	Measure-ment	Limit	Margin		
		MHz	dBuV	dB	dBuV	dBuV	dB	Detector	Comment
1		0.4695	40.11	10.08	50.19	56.52	-6.33	QP	
2		0.4695	28.23	10.08	38.31	46.52	-8.21	AVG	
3		0.6000	40.20	10.10	50.30	56.00	-5.70	QP	
4		0.6000	29.17	10.10	39.27	46.00	-6.73	AVG	
5	*	0.6630	40.41	10.12	50.53	56.00	-5.47	QP	
6		0.6630	28.93	10.12	39.05	46.00	-6.95	AVG	
7		0.7260	39.85	10.14	49.99	56.00	-6.01	QP	
8		0.7260	30.34	10.14	40.48	46.00	-5.52	AVG	
9		0.7935	28.26	10.18	38.44	46.00	-7.56	AVG	
10		1.1174	39.06	10.18	49.24	56.00	-6.76	QP	
11		1.4550	25.65	10.18	35.83	46.00	-10.17	AVG	
12		10.2930	43.72	9.94	53.66	60.00	-6.34	QP	

Remark:

1. The following Quasi-Peak and Average measurements were performed on the EUT:
2. Final Test Level =Receiver Reading + LISN Factor + Cable Loss.
3. If the Peak value under Average limit, the Average value is not recorded in the report.

Neutral line:

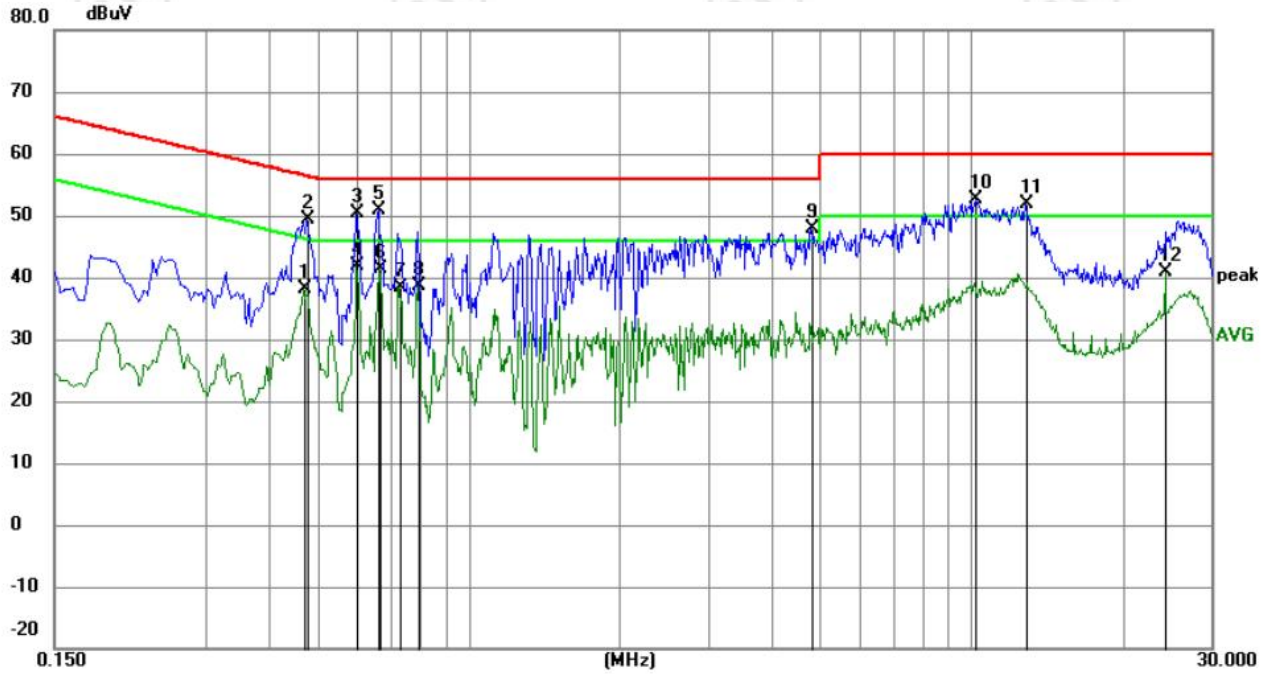

No.	Mk.	Freq.	Reading Level	Correct Factor	Measure-ment	Limit	Margin		
		MHz	dBuV	dB	dBuV	dBuV	dB	Detector	Comment
1		0.4695	28.07	10.08	38.15	46.52	-8.37	AVG	
2		0.4785	39.42	10.08	49.50	56.37	-6.87	QP	
3		0.6000	40.18	10.10	50.28	56.00	-5.72	QP	
4	*	0.6000	31.85	10.10	41.95	46.00	-4.05	AVG	
5		0.6630	40.65	10.12	50.77	56.00	-5.23	QP	
6		0.6675	31.24	10.12	41.36	46.00	-4.64	AVG	
7		0.7304	28.33	10.15	38.48	46.00	-7.52	AVG	
8		0.7935	28.41	10.18	38.59	46.00	-7.41	AVG	
9		4.8165	37.72	10.07	47.79	56.00	-8.21	QP	
10		10.2255	42.77	9.95	52.72	60.00	-7.28	QP	
11		12.7860	41.86	9.90	51.76	60.00	-8.24	QP	
12		24.2925	30.97	9.81	40.78	50.00	-9.22	AVG	

Remark:

1. The following Quasi-Peak and Average measurements were performed on the EUT:
2. Final Test Level =Receiver Reading + LISN Factor + Cable Loss.
3. If the Peak value under Average limit, the Average value is not recorded in the report.

6.3 Maximum Conducted Output Power

Test Requirement:	47 CFR Part 15C Section 15.407 (a)
Test Method:	KDB789033 D02 General UNII Test Procedures New Rules v02r01 Section E
Test Setup:	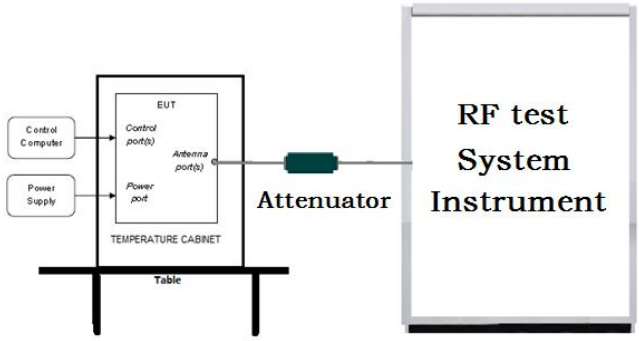
Test Procedure:	1. The testing follows the Measurement Procedure of KDB789033 D02 General UNII Test Procedures New Rules v02r01 Section E, 3, a 2. The RF output of EUT was connected to the power meter by RF cable and attenuator. The path loss was compensated to the results for each measurement. 3. Set to the maximum power setting and enable the EUT transmit continuously. 4. Measure the conducted output power and record the results in the test report.
Limit:	

Frequency band (MHz)	Limit
5150-5250	≤1W(30dBm) for master device
	≤250mW(24dBm) for client device
5250-5350	≤250mW(24dBm) for client device or 11dBm+10logB*
5470-5725	≤250mW(24dBm) for client device or 11dBm+10logB*
5725-5850	≤1W(30dBm)
Remark:	* Where B is the 26dB emission bandwidth in MHz The maximum conducted output power must be measured over any interval of continuous transmission using instrumentation calibrated in terms of an rms-equivalent voltage.

Test Mode:	Transmitting mode with modulation
Test Results:	Refer to Appendix A

6.4 6dB Emisson Bandwidth

Test Requirement:	47 CFR Part 15C Section 15.407 (e)
Test Method:	KDB789033 D02 General UNII Test Procedures New Rules v02r01 Section C
Test Setup:	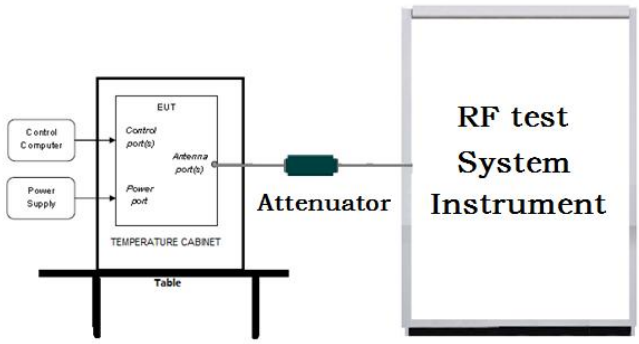 Remark: Offset=Cable loss+ attenuation factor.
Test Procedure:	1. KDB789033 D02 General UNII Test Procedures New Rules v02r01 Section C 2. Set to the maximum power setting and enable the EUT transmit continuously. 3. Make the measurement with the spectrum analyzer's resolution bandwidth (RBW) = 100 kHz. Set the Video bandwidth (VBW) = 300 kHz. In order to make an accurate measurement. The 6dB bandwidth must be greater than 500 kHz. 4. Measure and record the results in the test report.
Limit:	≥ 500 kHz
Test Mode:	Transmitting mode with modulation
Test Results:	Refer to Appendix A

6.5 26dB Emission Bandwidth and 99% Occupied Bandwidth

Test Requirement:	47 CFR Part 15C Section 15.407 (a)
Test Method:	KDB789033 D02 General UNII Test Procedures New Rules v02r01 Section D
Test Setup:	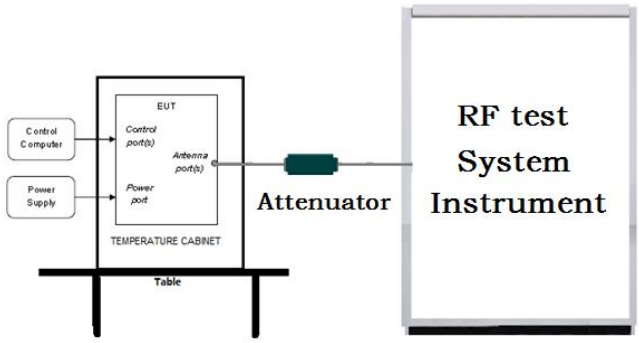 Remark: Offset=Cable loss+ attenuation factor.
Test Procedure:	1. KDB789033 D02 General UNII Test Procedures New Rules v02r01 Section D 2. Set to the maximum power setting and enable the EUT transmit continuously. 3. Make the measurement with the spectrum analyzer's resolution bandwidth (RBW) = 100 kHz. Set the Video bandwidth (VBW) = 300 kHz. In order to make an accurate measurement. 4. Measure and record the results in the test report.
Limit:	No restriction limits
Test Mode:	Transmitting mode with modulation
Test Results:	Refer to Appendix A

6.6 Maximum Power Spectral Density

Test Requirement:	47 CFR Part 15C Section 15.407 (a)
Test Method:	KDB789033 D02 General UNII Test Procedures New Rules v02r01 Section F
Test Setup:	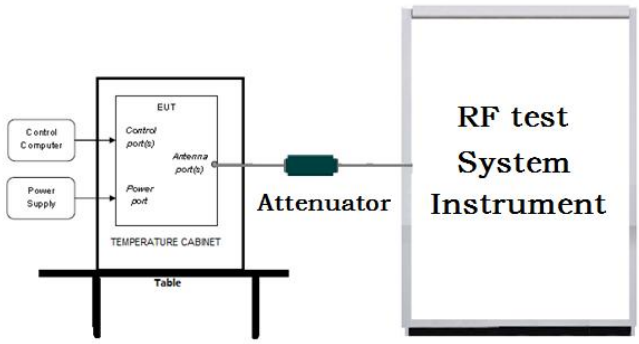 Remark: Offset=Cable loss+ attenuation factor.
Test Procedure:	1. Set the spectrum analyzer or EMI receiver span to view the entire emission bandwidth. 1. Set RBW = 510 kHz/1 MHz, VBW ≥ 3*RBW, Sweep time = Auto, Detector = RMS. 2. Allow the sweeps to continue until the trace stabilizes. 3. Use the peak marker function to determine the maximum amplitude level.
Limit:	

Frequency band (MHz)	Limit
5150-5250	≤17dBm in 1MHz for master device
	≤11dBm in 1MHz for client device
5250-5350	≤11dBm in 1MHz for client device
5470-5725	≤11dBm in 1MHz for client device
5725-5850	≤30dBm in 500kHz
Remark:	The maximum power spectral density is measured as a conducted emission by direct connection of a calibrated test instrument to the equipment under test.

Test Mode:	Transmitting mode with modulation
Test Results:	Refer to Appendix A

6.7 Frequency Stability

Test Requirement:	47 CFR Part 15C Section 15.407 (g)
Test Method:	ANSI C63.10: 2013
Test Setup:	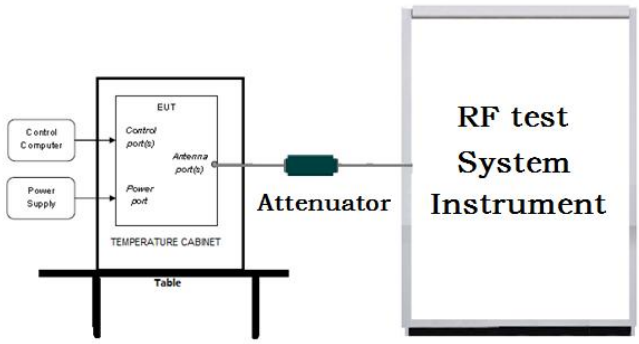 Remark: Offset=Cable loss+ attenuation factor.
Test Procedure:	1.The EUT was placed inside the environmental test chamber and powered by nominal AC/DC voltage. 2. Turn the EUT on and couple its output to a spectrum analyzer. 3. Turn the EUT off and set the chamber to the highest temperature specified. d. Allow sufficient time (approximately 30 min) for the temperature of the chamber to stabilize. 4. Repeat step 2 and 3 with the temperature chamber set to the lowest temperature. 5. The test chamber was allowed to stabilize at +20 degree C for a minimum of 30 minutes. The supply voltage was then adjusted on the EUT from 85% to 115% and the frequency record.
Limit:	The frequency tolerance shall be maintained within the band of operation frequency over a temperature variation of 0 degrees to 45 degrees C at normal supply voltage, and for a variation in the primary supply voltage from 85% to 115% of the rated supply voltage at a temperature of 20 degrees C.
Test Mode:	Transmitting mode with modulation
Test Results:	Refer to Appendix A

6.8 Radiated Emission

Test Requirement:	47 CFR Part 15C Section 15.209 and 15.407 (b)
Test Method:	ANSI C63.10 2013
Test Site:	Measurement Distance: 3m (Semi-Anechoic Chamber)
Receiver Setup:	

Frequency	Detector	RBW	VBW	Remark
0.009MHz-0.090MHz	Peak	10kHz	30kHz	Peak
0.009MHz-0.090MHz	Average	10kHz	30kHz	Average
0.090MHz-0.110MHz	Quasi-peak	10kHz	30kHz	Quasi-peak
0.110MHz-0.490MHz	Peak	10kHz	30kHz	Peak
0.110MHz-0.490MHz	Average	10kHz	30kHz	Average
0.490MHz -30MHz	Quasi-peak	10kHz	30kHz	Quasi-peak
30MHz-1GHz	Quasi-peak	100 kHz	300kHz	Quasi-peak
Above 1GHz	Peak	1MHz	3MHz	Peak
	Peak	1MHz	10kHz	Average

Limit:

Frequency	Field strength (microvolt/meter)	Limit (dBuV/m)	Remark	Measurement distance (m)
0.009MHz-0.490MHz	2400/F(kHz)	-	-	300
0.490MHz-1.705MHz	24000/F(kHz)	-	-	30
1.705MHz-30MHz	30	-	-	30
30MHz-88MHz	100	40.0	Quasi-peak	3
88MHz-216MHz	150	43.5	Quasi-peak	3
216MHz-960MHz	200	46.0	Quasi-peak	3
960MHz-1GHz	500	54.0	Quasi-peak	3
Above 1GHz	500	54.0	Average	3

*(1) For transmitters operating in the 5.15-5.25 GHz band: All emissions outside of the 5.15-5.35 GHz band shall not exceed an e.i.r.p. of −27 dBm/MHz.
(2) For transmitters operating in the 5.25-5.35 GHz band: All emissions outside of the 5.15-5.35 GHz band shall not exceed an e.i.r.p. of −27 dBm/MHz.
(3) For transmitters operating in the 5.47-5.725 GHz band: All emissions outside of the 5.47-5.725 GHz band shall not exceed an e.i.r.p. of −27 dBm/MHz.
(4) For transmitters operating in the 5.725-5.85 GHz band:
(i) All emissions shall be limited to a level of −27 dBm/MHz at 75 MHz or more above or below the band edge increasing linearly to 10 dBm/MHz at 25 MHz above or below the band edge, and from 25 MHz above or below the band edge increasing linearly to a level of 15.6 dBm/MHz at 5 MHz above or below the band edge, and from 5 MHz above or below the band edge increasing linearly to a level of 27 dBm/MHz at the band edge.

Remark: The emission limits shown in the above table are based on measurements employing a CISPR quasi-peak detector except for the frequency bands 9-90kHz, 110-490kHz and above 1000 MHz. Radiated emission limits in these three bands are based on measurements employing

	an average detector, the peak field strength of any emission shall not exceed the maximum permitted average limits specified above by more than 20 dB under any condition of modulation. Note: (i) EIRP = ((E*d)^2) / 30 where: • E is the field strength in V/m; • d is the measurement distance in meters; • EIRP is the equivalent isotropically radiated power in watts. (ii) Working in dB units, the above equation is equivalent to: EIRP[dBm] = E[dBμV/m] + 20 log(d[meters]) - 104.77 (iii) Or, if d is 3 meters: EIRP[dBm] = E[dBμV/m] - 95.2
Test Setup:	

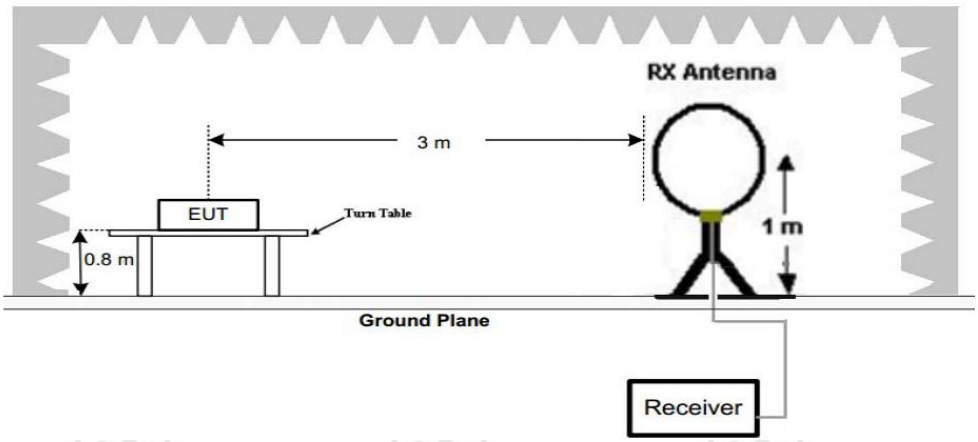

Figure 1. Below 30MHz

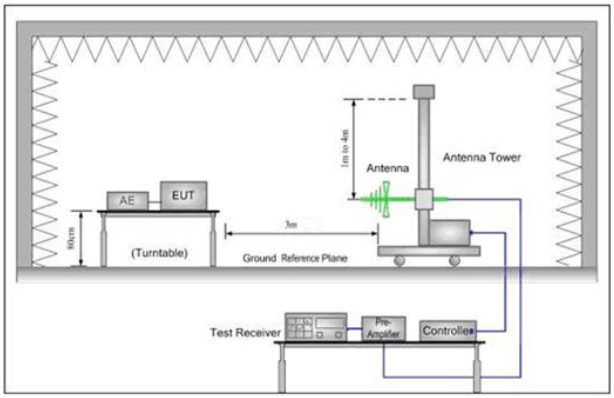

Figure 2. 30MHz to 1GHz

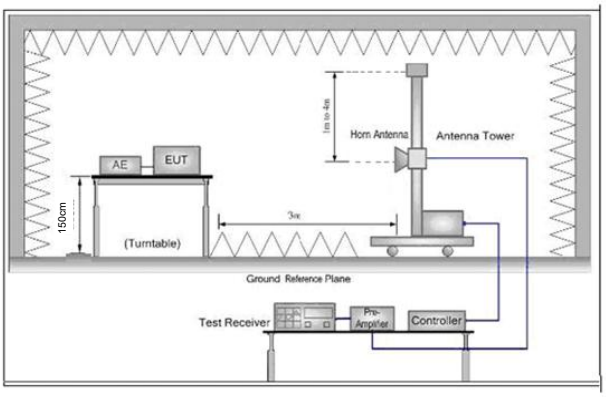

Figure 3. Above 1 GHz

Test Procedure:	a. 1) Below 1G: The EUT was placed on the top of a rotating table 0.8 meters above the ground at a 3 meter semi-anechoic camber. The table was rotated 360 degrees to determine the position of the highest radiation. 2) Above 1G: The EUT was placed on the top of a rotating table 1.5 meters above the ground at a 3 meter semi-anechoic camber. The table was rotated 360 degrees to determine the position of the highest radiation. Note: For the radiated emission test above 1GHz:

	Place the measurement antenna away from each area of the EUT determined to be a source of emissions at the specified measurement distance, while keeping the measurement antenna aimed at the source of emissions at each frequency of significant emissions, with polarization oriented for maximum response. The measurement antenna may have to be higher or lower than the EUT, depending on the radiation pattern of the emission and staying aimed at the emission source for receiving the maximum signal. The final measurement antenna elevation shall be that which maximizes the emissions. The measurement antenna elevation for maximum emissions shall be restricted to a range of heights of from 1 m to 4 m above the ground or reference ground plane. b. The EUT was set 3 meters away from the interference-receiving antenna, which was mounted on the top of a variable-height antenna tower. c. The antenna height is varied from one meter to four meters above the ground to determine the maximum value of the field strength. Both horizontal and vertical polarizations of the antenna are set to make the measurement. d. For each suspected emission, the EUT was arranged to its worst case and then the antenna was tuned to heights from 1 meter to 4 meters (for the test frequency of below 30MHz, the antenna was tuned to heights 1 meter) and the rotatable table was turned from 0 degrees to 360 degrees to find the maximum reading. e. The test-receiver system was set to Peak Detect Function and Specified Bandwidth with Maximum Hold Mode. f. If the emission level of the EUT in peak mode was 10dB lower than the limit specified, then testing could be stopped and the peak values of the EUT would be reported. Otherwise the emissions that did not have 10dB margin would be re-tested one by one using peak, quasi-peak or average method as specified and then reported in a data sheet. g. Test the EUT in the lowest channel, the middle channel and the highest channel h. The radiation measurements are performed in X, Y, Z axis positioning for Transmitting mode, and found the X axis positioning which it is the worst case. i. Repeat above procedures until all frequencies measured was complete.
Test Mode:	Transmitting mode with modulation
Test Results:	Pass

Radiated Spurious Emissions test Data:
Radiated Emission below 1GHz

Remark: During the test, the Radiates Emission from 30MHz to 1GHz was performed in all modes, only the worst case lowest channel of 6Mbps for 802.11 a was recorded in the report.

Horizontal:

Test Graph

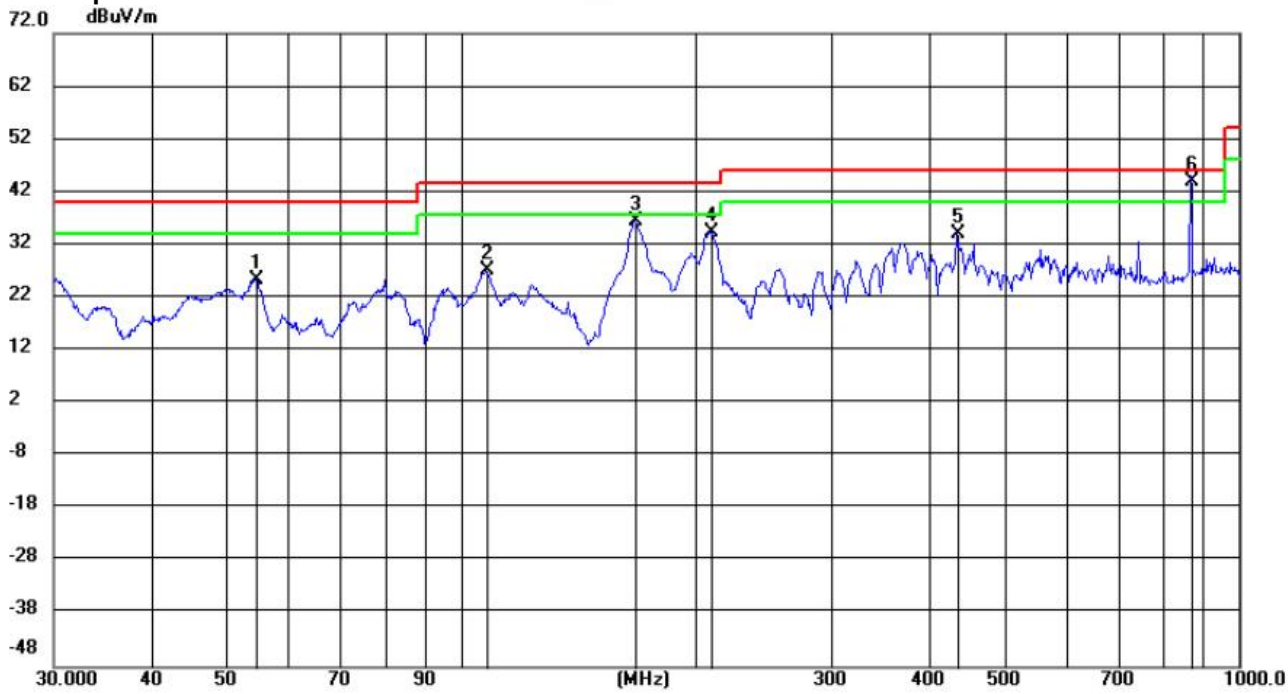

No.	Mk.	Freq.	Reading Level	Correct Factor	Measure-ment	Limit	Margin		Antenna Height	Table Degree	
		MHz	dBuV	dB/m	dBuV/m	dBuV/m	dB	Detector	cm	degree	Comment
1		54.6428	11.49	13.99	25.48	40.00	-14.52	QP	100	229	
2		108.1149	13.22	14.01	27.23	43.50	-16.27	QP	199	352	
3		167.6477	25.07	11.25	36.32	43.50	-7.18	QP	199	161	
4		209.6434	21.31	13.15	34.46	43.50	-9.04	QP	199	352	
5		434.1412	14.03	20.01	34.04	46.00	-11.96	QP	199	171	
6	*	868.2164	17.55	26.55	44.10	46.00	-1.90	QP	100	197	

Vertical:

Test Graph

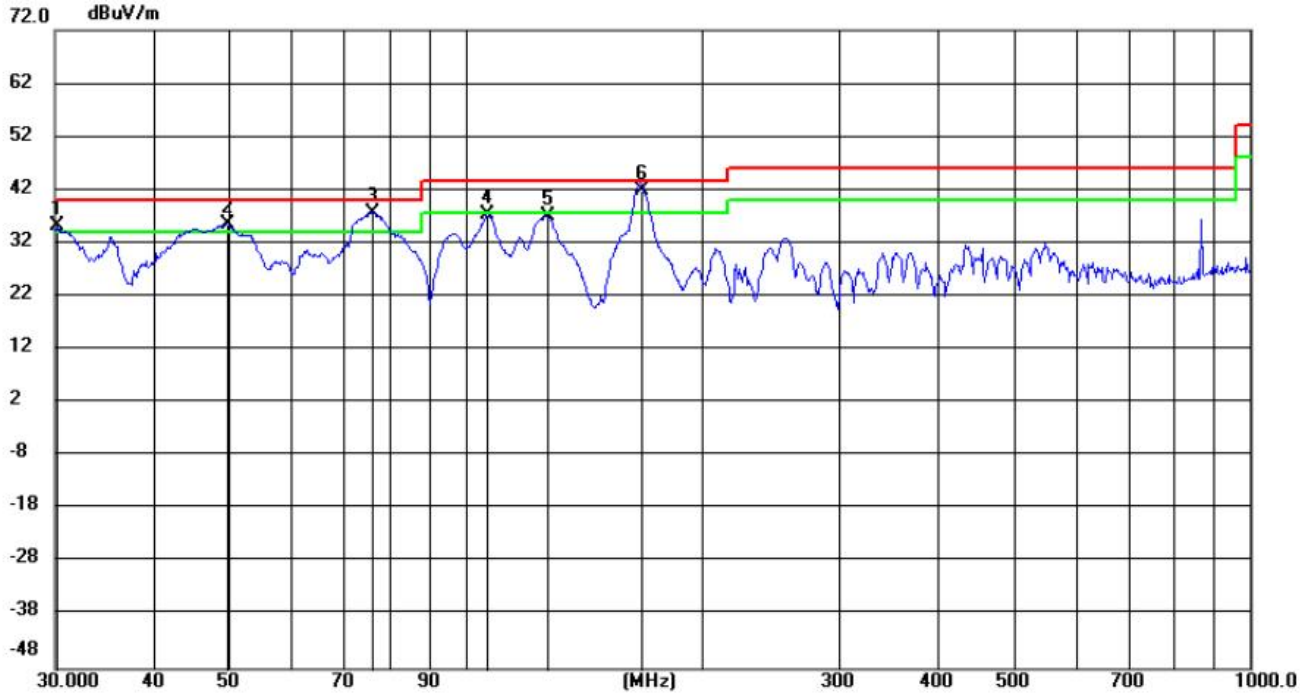

No.	Mk.	Freq.	Reading Level	Correct Factor	Measure-ment	Limit	Margin		Antenna Height	Table Degree	
		MHz	dBuV	dB/m	dBuV/m	dBuV/m	dB	Detector	cm	degree	Comment
1	!	30.2111	22.94	12.36	35.30	40.00	-4.70	QP	100	107	
2	!	49.6894	20.93	14.52	35.45	40.00	-4.55	QP	100	267	
3	!	76.0306	27.70	10.00	37.70	40.00	-2.30	QP	200	156	
4		106.6839	23.43	13.87	37.30	43.50	-6.20	QP	100	257	
5		127.2176	26.05	11.11	37.16	43.50	-6.34	QP	100	288	
6	*	167.3834	30.67	11.23	41.90	43.50	-1.60	QP	100	267	

Transmitter Emission above 1GHz

Remark: Through Pre-scan, for 20MHz Occupied Bandwidth, 802.11 a mode was the worst case; for 40MHz Occupied Bandwidth, 802.11 n(HT40) mode was the worst case; only the worst case was recorded in the report.

Mode:		802.11 a Transmitting				Channel:		5180MHz	
NO	Freq. [MHz]	Factor [dB]	Reading [dBμV]	Level [dBμV/m]	Limit [dBμV/m]	Margin [dB]	Result	Polarity	Remark
1	1541.8817	13.62	35.52	49.14	74.00	24.86	PASS	Horizontal	PK
2	2685.4874	17.38	35.92	53.30	74.00	20.70	PASS	Horizontal	PK
3	7168.1834	-3.18	49.12	45.94	74.00	28.06	PASS	Horizontal	PK
4	9711.5356	1.16	46.35	47.51	74.00	26.49	PASS	Horizontal	PK
5	11185.9093	2.60	45.66	48.26	74.00	25.74	PASS	Horizontal	PK
6	15462.9731	9.86	41.95	51.81	74.00	22.19	PASS	Horizontal	PK
7	1397.7759	12.83	36.62	49.45	74.00	24.55	PASS	Vertical	PK
8	2027.0011	14.69	35.31	50.00	74.00	24.00	PASS	Vertical	PK
9	7592.5546	-1.74	47.14	45.40	74.00	28.60	PASS	Vertical	PK
10	9323.9662	1.18	46.31	47.49	74.00	26.51	PASS	Vertical	PK
11	13676.9338	6.93	42.87	49.80	74.00	24.20	PASS	Vertical	PK
12	15743.5872	10.17	42.38	52.55	74.00	21.45	PASS	Vertical	PK

Mode:		802.11 a Transmitting				Channel:		5200MHz	
NO	Freq. [MHz]	Factor [dB]	Reading [dBμV]	Level [dBμV/m]	Limit [dBμV/m]	Margin [dB]	Result	Polarity	Remark
1	1484.8994	13.38	36.35	49.73	74.00	24.27	PASS	Horizontal	PK
2	2251.19	15.61	35.80	51.41	74.00	22.59	PASS	Horizontal	PK
3	6958.8729	-2.90	48.79	45.89	74.00	28.11	PASS	Horizontal	PK
4	8795.5148	0.24	46.39	46.63	74.00	27.37	PASS	Horizontal	PK
5	11276.1888	2.42	46.31	48.73	74.00	25.27	PASS	Horizontal	PK
6	15137.5069	10.58	41.21	51.79	74.00	22.21	PASS	Horizontal	PK
7	1556.6223	13.66	35.61	49.27	74.00	24.73	PASS	Vertical	PK
8	2126.005	15.49	35.72	51.21	74.00	22.79	PASS	Vertical	PK
9	7363.6932	-2.93	49.75	46.82	74.00	27.18	PASS	Vertical	PK
10	11215.2358	2.65	45.94	48.59	74.00	25.41	PASS	Vertical	PK
11	14287.6144	8.51	41.94	50.45	74.00	23.55	PASS	Vertical	PK
12	15968.9984	9.90	43.24	53.14	74.00	20.86	PASS	Vertical	PK

Mode:			802.11 a Transmitting			Channel:		5240MHz	
NO	Freq. [MHz]	Factor [dB]	Reading [dBμV]	Level [dBμV/m]	Limit [dBμV/m]	Margin [dB]	Result	Polarity	Remark
1	1396.4559	12.83	36.08	48.91	74.00	25.09	PASS	Horizontal	PK
2	2019.5208	14.71	35.94	50.65	74.00	23.35	PASS	Horizontal	PK
3	7463.1732	-2.36	48.07	45.71	74.00	28.29	PASS	Horizontal	PK
4	9780.539	1.12	45.82	46.94	74.00	27.06	PASS	Horizontal	PK
5	13256.5878	6.17	43.39	49.56	74.00	24.44	PASS	Horizontal	PK
6	15466.9984	9.88	41.93	51.81	74.00	22.19	PASS	Horizontal	PK
7	1395.3558	12.84	36.86	49.70	74.00	24.30	PASS	Vertical	PK
8	1922.7169	14.87	35.88	50.75	74.00	23.25	PASS	Vertical	PK
9	7586.8043	-1.82	48.07	46.25	74.00	27.75	PASS	Vertical	PK
10	9607.4554	1.24	46.21	47.45	74.00	26.55	PASS	Vertical	PK
11	12518.2509	4.72	45.35	50.07	74.00	23.93	PASS	Vertical	PK
12	15019.626	9.15	42.41	51.56	74.00	22.44	PASS	Vertical	PK

Mode:			802.11 a Transmitting			Channel:		5745MHz	
NO	Freq. [MHz]	Factor [dB]	Reading [dBμV]	Level [dBμV/m]	Limit [dBμV/m]	Margin [dB]	Result	Polarity	Remark
1	1233.2233	11.76	35.38	47.14	74.00	26.86	PASS	Horizontal	PK
2	2330.5831	15.95	35.30	51.25	74.00	22.75	PASS	Horizontal	PK
3	7434.629	-2.59	49.52	46.93	74.00	27.07	PASS	Horizontal	PK
4	9658.8773	1.17	46.01	47.18	74.00	26.82	PASS	Horizontal	PK
5	12498.0332	4.45	44.39	48.84	74.00	25.16	PASS	Horizontal	PK
6	15142.4428	10.68	41.18	51.86	74.00	22.14	PASS	Horizontal	PK
7	1228.8229	11.71	36.41	48.12	74.00	25.88	PASS	Vertical	PK
8	2170.5171	15.70	35.35	51.05	74.00	22.95	PASS	Vertical	PK
9	7980.532	-1.28	50.63	49.35	74.00	24.65	PASS	Vertical	PK
10	9707.9472	1.15	45.88	47.03	74.00	26.97	PASS	Vertical	PK
11	12392.9929	4.24	45.90	50.14	74.00	23.86	PASS	Vertical	PK
12	15508.1672	10.05	41.78	51.83	74.00	22.17	PASS	Vertical	PK

Mode:			802.11 a Transmitting			Channel:		5785MHz	
NO	Freq. [MHz]	Factor [dB]	Reading [dBμV]	Level [dBμV/m]	Limit [dBμV/m]	Margin [dB]	Result	Polarity	Remark
1	1253.0253	11.97	35.81	47.78	74.00	26.22	PASS	Horizontal	PK
2	2155.6656	15.30	35.43	50.73	74.00	23.27	PASS	Horizontal	PK
3	7616.3411	-1.69	48.06	46.37	74.00	27.63	PASS	Horizontal	PK
4	9842.8895	1.47	45.60	47.07	74.00	26.93	PASS	Horizontal	PK
5	11937.5625	2.76	45.87	48.63	74.00	25.37	PASS	Horizontal	PK
6	15177.7118	11.11	40.41	51.52	74.00	22.48	PASS	Horizontal	PK
7	1298.6799	12.19	35.87	48.06	74.00	25.94	PASS	Vertical	PK
8	2157.8658	15.28	35.41	50.69	74.00	23.31	PASS	Vertical	PK
9	6996.8331	-3.37	49.27	45.90	74.00	28.10	PASS	Vertical	PK
10	9717.9145	1.14	46.07	47.21	74.00	26.79	PASS	Vertical	PK
11	11890.026	3.07	45.50	48.57	74.00	25.43	PASS	Vertical	PK
12	14917.0278	9.32	42.36	51.68	74.00	22.32	PASS	Vertical	PK

Mode:			802.11 a Transmitting			Channel:		5825MHz	
NO	Freq. [MHz]	Factor [dB]	Reading [dBμV]	Level [dBμV/m]	Limit [dBμV/m]	Margin [dB]	Result	Polarity	Remark
1	1317.9318	12.53	36.25	48.78	74.00	25.22	PASS	Horizontal	PK
2	2180.9681	15.55	35.53	51.08	74.00	22.92	PASS	Horizontal	PK
3	7515.9011	-2.43	48.85	46.42	74.00	27.58	PASS	Horizontal	PK
4	9586.0391	1.12	45.71	46.83	74.00	27.17	PASS	Horizontal	PK
5	12836.9225	5.32	44.66	49.98	74.00	24.02	PASS	Horizontal	PK
6	15155.477	10.90	39.98	50.88	74.00	23.12	PASS	Horizontal	PK
7	1249.725	11.89	39.37	51.26	74.00	22.74	PASS	Vertical	PK
8	2095.1595	15.09	35.92	51.01	74.00	22.99	PASS	Vertical	PK
9	7428.4952	-2.70	48.69	45.99	74.00	28.01	PASS	Vertical	PK
10	9795.353	1.14	45.49	46.63	74.00	27.37	PASS	Vertical	PK
11	12491.8995	4.31	45.25	49.56	74.00	24.44	PASS	Vertical	PK
12	15416.1611	10.13	41.75	51.88	74.00	22.12	PASS	Vertical	PK

Mode:			802.11 n(HT40) Transmitting			Channel:		5190MHz	
NO	Freq. [MHz]	Factor [dB]	Reading [dBμV]	Level [dBμV/m]	Limit [dBμV/m]	Margin [dB]	Result	Polarity	Remark
1	1679.1672	14.15	35.43	49.58	74.00	24.42	PASS	Horizontal	PK
2	2567.5627	16.71	35.57	52.28	74.00	21.72	PASS	Horizontal	PK
3	7593.1297	-1.73	48.47	46.74	74.00	27.26	PASS	Horizontal	PK
4	10305.5403	1.97	46.26	48.23	74.00	25.77	PASS	Horizontal	PK
5	11268.7134	2.42	45.73	48.15	74.00	25.85	PASS	Horizontal	PK
6	14840.217	9.82	40.82	50.64	74.00	23.36	PASS	Horizontal	PK
7	1418.6767	13.03	36.28	49.31	74.00	24.69	PASS	Vertical	PK
8	2358.9944	16.26	35.53	51.79	74.00	22.21	PASS	Vertical	PK
9	8560.903	-0.52	47.39	46.87	74.00	27.13	PASS	Vertical	PK
10	11018.5759	2.27	45.90	48.17	74.00	25.83	PASS	Vertical	PK
11	11782.7891	2.28	46.68	48.96	74.00	25.04	PASS	Vertical	PK
12	15393.3947	10.17	41.61	51.78	74.00	22.22	PASS	Vertical	PK

Mode:			802.11 n(HT40) Transmitting			Channel:		5230MHz	
NO	Freq. [MHz]	Factor [dB]	Reading [dBμV]	Level [dBμV/m]	Limit [dBμV/m]	Margin [dB]	Result	Polarity	Remark
1	1432.3173	12.97	36.02	48.99	74.00	25.01	PASS	Horizontal	PK
2	1663.7666	13.95	35.89	49.84	74.00	24.16	PASS	Horizontal	PK
3	2580.3232	16.65	35.91	52.56	74.00	21.44	PASS	Horizontal	PK
4	8556.8778	-0.50	47.24	46.74	74.00	27.26	PASS	Horizontal	PK
5	11411.3206	2.37	46.65	49.02	74.00	24.98	PASS	Horizontal	PK
6	14992.0246	9.57	41.91	51.48	74.00	22.52	PASS	Horizontal	PK
7	1431.2172	12.95	35.88	48.83	74.00	25.17	PASS	Vertical	PK
8	1882.2353	14.55	35.53	50.08	74.00	23.92	PASS	Vertical	PK
9	2708.1483	17.23	35.49	52.72	74.00	21.28	PASS	Vertical	PK
10	7585.0793	-1.85	47.96	46.11	74.00	27.89	PASS	Vertical	PK
11	10325.0913	1.96	45.72	47.68	74.00	26.32	PASS	Vertical	PK
12	13306.6153	6.14	43.68	49.82	74.00	24.18	PASS	Vertical	PK

Mode:			802.11 n(HT40) Transmitting			Channel:		5755MHz	
NO	Freq. [MHz]	Factor [dB]	Reading [dBμV]	Level [dBμV/m]	Limit [dBμV/m]	Margin [dB]	Result	Polarity	Remark
1	1510.451	13.39	36.75	50.14	74.00	23.86	PASS	Horizontal	PK
2	2331.6832	15.95	35.54	51.49	74.00	22.51	PASS	Horizontal	PK
3	7445.363	-2.41	48.58	46.17	74.00	27.83	PASS	Horizontal	PK
4	9735.549	1.12	46.37	47.49	74.00	26.51	PASS	Horizontal	PK
5	11870.8581	3.09	46.43	49.52	74.00	24.48	PASS	Horizontal	PK
6	14927.7619	9.28	42.14	51.42	74.00	22.58	PASS	Horizontal	PK
7	1419.1419	12.96	35.68	48.64	74.00	25.36	PASS	Vertical	PK
8	2414.7415	16.16	35.21	51.37	74.00	22.63	PASS	Vertical	PK
9	7637.8092	-1.80	48.08	46.28	74.00	27.72	PASS	Vertical	PK
10	9791.5194	1.14	46.85	47.99	74.00	26.01	PASS	Vertical	PK
11	11742.8162	2.47	46.61	49.08	74.00	24.92	PASS	Vertical	PK
12	14884.8257	9.50	41.50	51.00	74.00	23.00	PASS	Vertical	PK

Mode:			802.11 n(HT40) Transmitting			Channel:		5795MHz	
NO	Freq. [MHz]	Factor [dB]	Reading [dBμV]	Level [dBμV/m]	Limit [dBμV/m]	Margin [dB]	Result	Polarity	Remark
1	1354.7855	12.59	36.37	48.96	74.00	25.04	PASS	Horizontal	PK
2	2153.4653	15.32	35.48	50.80	74.00	23.20	PASS	Horizontal	PK
3	7601.7735	-1.63	47.84	46.21	74.00	27.79	PASS	Horizontal	PK
4	9666.5444	1.16	45.95	47.11	74.00	26.89	PASS	Horizontal	PK
5	12350.0567	4.75	44.70	49.45	74.00	24.55	PASS	Horizontal	PK
6	15503.5669	10.05	41.72	51.77	74.00	22.23	PASS	Horizontal	PK
7	1402.0902	12.86	36.34	49.20	74.00	24.80	PASS	Vertical	PK
8	2292.0792	15.96	35.12	51.08	74.00	22.92	PASS	Vertical	PK
9	7616.3411	-1.69	48.49	46.80	74.00	27.20	PASS	Vertical	PK
10	9313.0875	1.22	45.96	47.18	74.00	26.82	PASS	Vertical	PK
11	12495.733	4.40	44.68	49.08	74.00	24.92	PASS	Vertical	PK
12	15407.7272	10.22	41.43	51.65	74.00	22.35	PASS	Vertical	PK

Note:

1) The field strength is calculated by adding the Antenna Factor, Cable Factor & Preamplifier. The basic equation with a sample calculation is as follows:

Final Test Level =Receiver Reading - Correct Factor

Correct Factor = Preamplifier Factor– Antenna Factor–Cable Factor

2) Scan from 9kHz to 40GHz, the disturbance above 18GHz and below 30MHz was very low, and the above harmonics were the highest point could be found when testing, so only the above harmonics had been displayed. The amplitude of spurious emissions from the radiator which are attenuated more than 20dB below the limit need not be reported.

6.9 Radiated Emission which fall in the restricted bands

Test Requirement:	47 CFR Part 15C Section 15.209 and 15.407 (b)
Test Method:	ANSI C63.10 2013
Test Site:	Measurement Distance: 3m (Semi-Anechoic Chamber)
Receiver Setup:	

Frequency	Detector	RBW	VBW	Remark
0.009MHz-0.090MHz	Peak	10kHz	30kHz	Peak
0.009MHz-0.090MHz	Average	10kHz	30kHz	Average
0.090MHz-0.110MHz	Quasi-peak	10kHz	30kHz	Quasi-peak
0.110MHz-0.490MHz	Peak	10kHz	30kHz	Peak
0.110MHz-0.490MHz	Average	10kHz	30kHz	Average
0.490MHz -30MHz	Quasi-peak	10kHz	30kHz	Quasi-peak
30MHz-1GHz	Quasi-peak	100 kHz	300kHz	Quasi-peak
Above 1GHz	Peak	1MHz	3MHz	Peak
	Peak	1MHz	10kHz	Average

Limit:

Frequency	Field strength (microvolt/meter)	Limit (dBuV/m)	Remark	Measurement distance (m)
0.009MHz-0.490MHz	2400/F(kHz)	-	-	300
0.490MHz-1.705MHz	24000/F(kHz)	-	-	30
1.705MHz-30MHz	30	-	-	30
30MHz-88MHz	100	40.0	Quasi-peak	3
88MHz-216MHz	150	43.5	Quasi-peak	3
216MHz-960MHz	200	46.0	Quasi-peak	3
960MHz-1GHz	500	54.0	Quasi-peak	3
Above 1GHz	500	54.0	Average	3

*(1) For transmitters operating in the 5.15-5.25 GHz band: All emissions outside of the 5.15-5.35 GHz band shall not exceed an e.i.r.p. of −27 dBm/MHz.
(2) For transmitters operating in the 5.25-5.35 GHz band: All emissions outside of the 5.15-5.35 GHz band shall not exceed an e.i.r.p. of −27 dBm/MHz.
(3) For transmitters operating in the 5.47-5.725 GHz band: All emissions outside of the 5.47-5.725 GHz band shall not exceed an e.i.r.p. of −27 dBm/MHz.
(4) For transmitters operating in the 5.725-5.85 GHz band:
(i) All emissions shall be limited to a level of −27 dBm/MHz at 75 MHz or more above or below the band edge increasing linearly to 10 dBm/MHz at 25 MHz above or below the band edge, and from 25 MHz above or below the band edge increasing linearly to a level of 15.6 dBm/MHz at 5 MHz above or below the band edge, and from 5 MHz above or below the band edge increasing linearly to a level of 27 dBm/MHz at the band edge.

Remark: The emission limits shown in the above table are based on measurements employing a CISPR quasi-peak detector except for the frequency bands 9-90kHz, 110-490kHz and above 1000 MHz. Radiated

	emission limits in these three bands are based on measurements employing an average detector, the peak field strength of any emission shall not exceed the maximum permitted average limits specified above by more than 20 dB under any condition of modulation. Note: (i) EIRP = ((E*d)^2) / 30 where: • E is the field strength in V/m; • d is the measurement distance in meters; • EIRP is the equivalent isotropically radiated power in watts. (ii) Working in dB units, the above equation is equivalent to: EIRP[dBm] = E[dBμV/m] + 20 log(d[meters]) - 104.77 (iii) Or, if d is 3 meters: EIRP[dBm] = E[dBμV/m] - 95.2
Test Setup:	

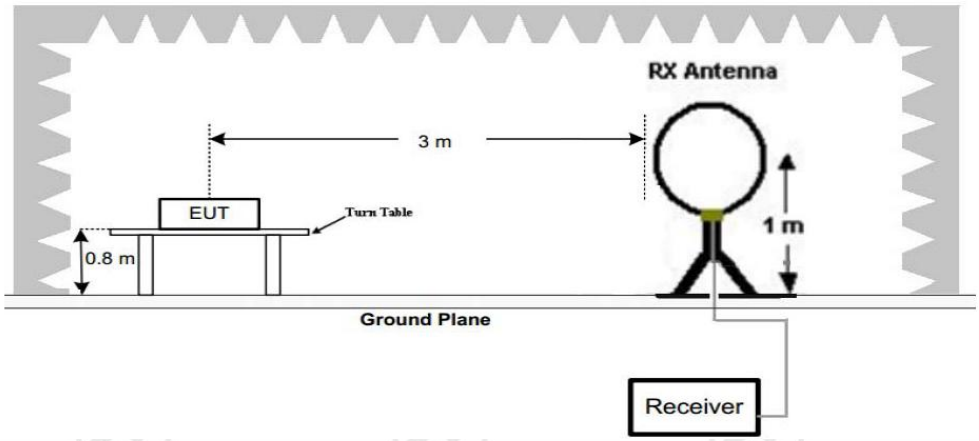

Figure 1. Below 30MHz

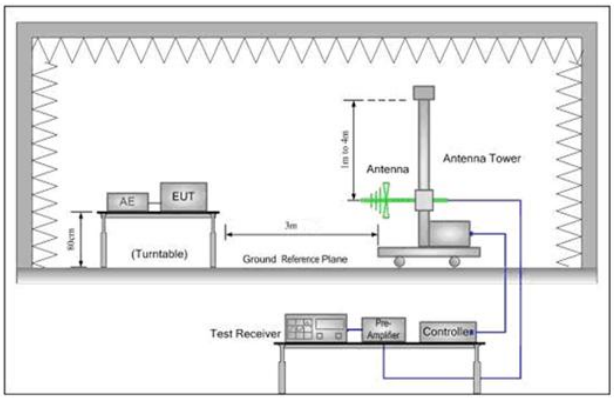

Figure 2. 30MHz to 1GHz

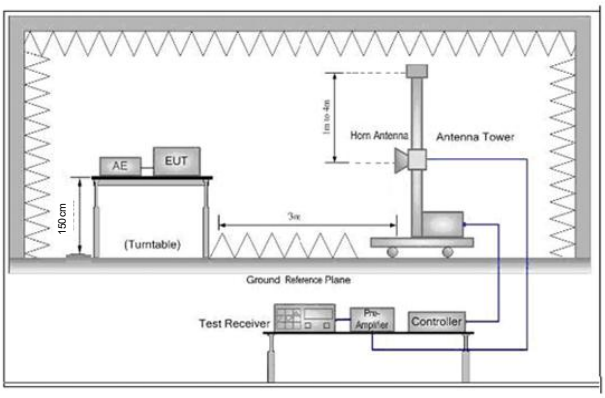

Figure 3. Above 1 GHz

Test Procedure:	j. 1) Below 1G: The EUT was placed on the top of a rotating table 0.8 meters above the ground at a 3 meter semi-anechoic camber. The table was rotated 360 degrees to determine the position of the highest radiation. 2) Above 1G: The EUT was placed on the top of a rotating table 1.5 meters above the ground at a 3 meter semi-anechoic camber. The table was rotated 360 degrees to determine the position of the highest radiation.

	Note: For the radiated emission test above 1GHz: Place the measurement antenna away from each area of the EUT determined to be a source of emissions at the specified measurement distance, while keeping the measurement antenna aimed at the source of emissions at each frequency of significant emissions, with polarization oriented for maximum response. The measurement antenna may have to be higher or lower than the EUT, depending on the radiation pattern of the emission and staying aimed at the emission source for receiving the maximum signal. The final measurement antenna elevation shall be that which maximizes the emissions. The measurement antenna elevation for maximum emissions shall be restricted to a range of heights of from 1 m to 4 m above the ground or reference ground plane. k. The EUT was set 3 meters away from the interference-receiving antenna, which was mounted on the top of a variable-height antenna tower. l. The antenna height is varied from one meter to four meters above the ground to determine the maximum value of the field strength. Both horizontal and vertical polarizations of the antenna are set to make the measurement. m. For each suspected emission, the EUT was arranged to its worst case and then the antenna was tuned to heights from 1 meter to 4 meters (for the test frequency of below 30MHz, the antenna was tuned to heights 1 meter) and the rotatable table was turned from 0 degrees to 360 degrees to find the maximum reading. n. The test-receiver system was set to Peak Detect Function and Specified Bandwidth with Maximum Hold Mode. o. If the emission level of the EUT in peak mode was 10dB lower than the limit specified, then testing could be stopped and the peak values of the EUT would be reported. Otherwise the emissions that did not have 10dB margin would be re-tested one by one using peak, quasi-peak or average method as specified and then reported in a data sheet. p. Test the EUT in the lowest channel, the Highest channel q. The radiation measurements are performed in X, Y, Z axis positioning for Transmitting mode, and found the X axis positioning which it is the worst case. r. Repeat above procedures until all frequencies measured was complete.
Test Mode:	Transmitting mode with modulation
Test Results:	Pass

Test Data:

EUT_Name		Test_Model	
Test_Mode	802.11 a Transmitting	Test_Frequency	5180MHz
Tset_Engineer	chenjun	Test_Date	2025/04/22
Remark			

Test Graph

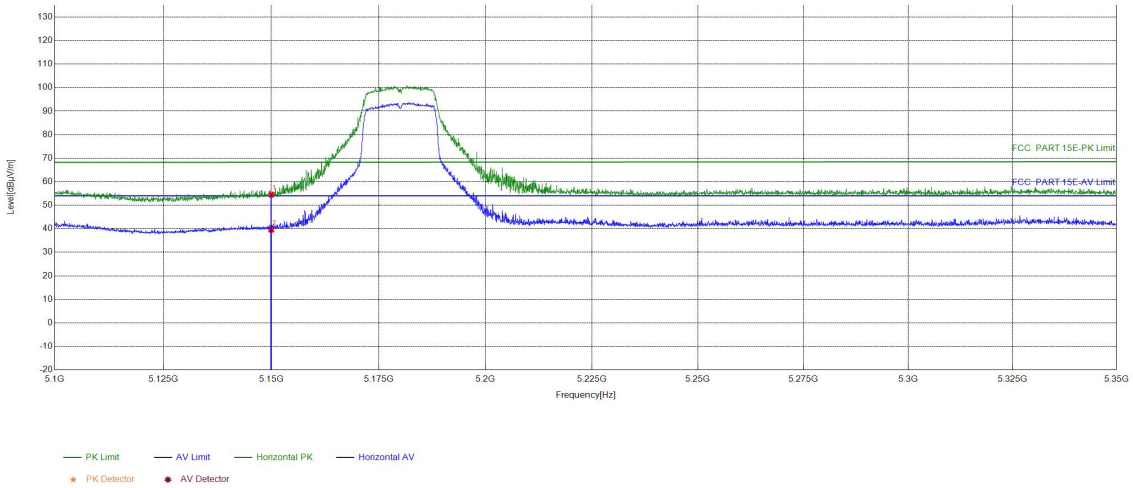

Suspected List									
NO	Freq. [MHz]	Factor [dB]	Reading [dBμV]	Level [dBμV/m]	Limit [dBμV/m]	Margin [dB]	Result	Polarity	Remark
1	5150	23.98	30.50	54.48	68.26	13.78	PASS	Horizontal	PK
2	5150	23.98	15.59	39.57	54.00	14.43	PASS	Horizontal	AV

EUT_Name		Test_Model	
Test_Mode	802.11 a Transmitting	Test_Frequency	5180MHz
Tset_Engineer	chenjun	Test_Date	2025/04/22
Remark			

Test Graph

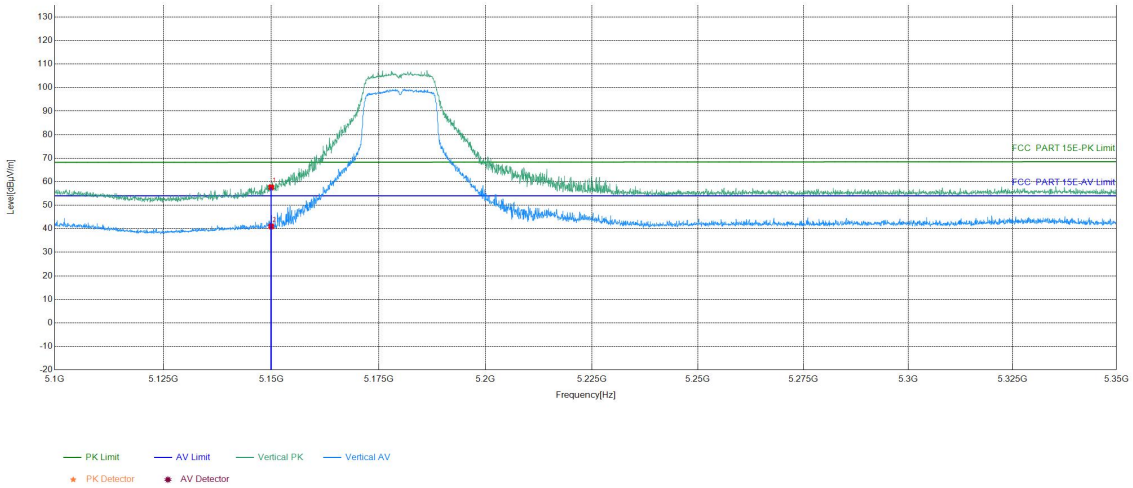

Suspected List									
NO	Freq. [MHz]	Factor [dB]	Reading [dBμV]	Level [dBμV/m]	Limit [dBμV/m]	Margin [dB]	Result	Polarity	Remark
1	5150	23.98	33.66	57.64	68.26	10.62	PASS	Vertical	PK
2	5150	23.98	17.00	40.98	54.00	13.02	PASS	Vertical	AV

EUT_Name		Test_Model	
Test_Mode	802.11 n(HT20) Transmitting	Test_Frequency	5180MHz
Tset_Engineer	chenjun	Test_Date	2025/04/22
Remark			

Test Graph

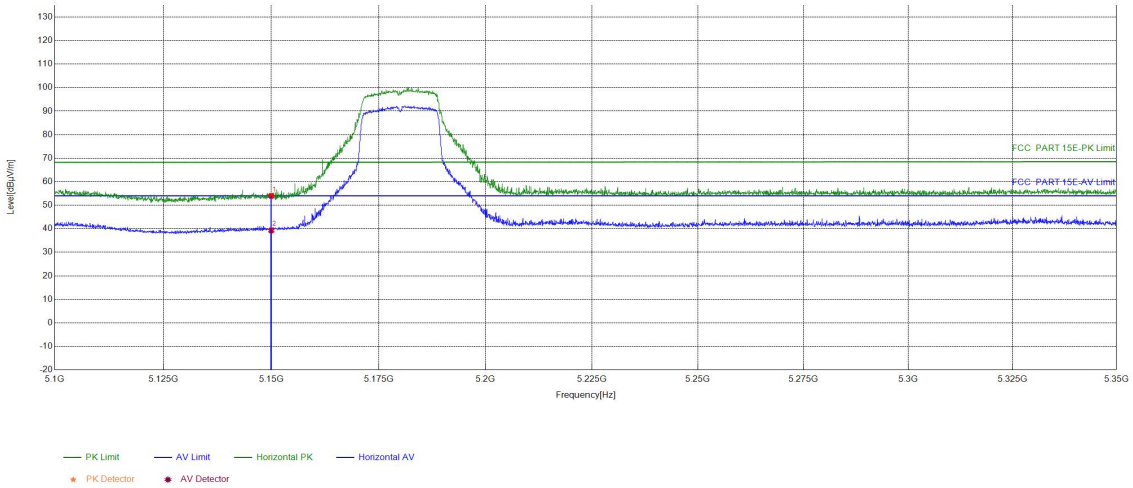

Suspected List									
NO	Freq. [MHz]	Factor [dB]	Reading [dBμV]	Level [dBμV/m]	Limit [dBμV/m]	Margin [dB]	Result	Polarity	Remark
1	5150	23.98	29.98	53.96	68.26	14.30	PASS	Horizontal	PK
2	5150	23.98	15.32	39.30	54.00	14.70	PASS	Horizontal	AV

EUT_Name		Test_Model	
Test_Mode	802.11 n(HT20) Transmitting	Test_Frequency	5180MHz
Tset_Engineer	chenjun	Test_Date	2025/04/22
Remark			

Test Graph

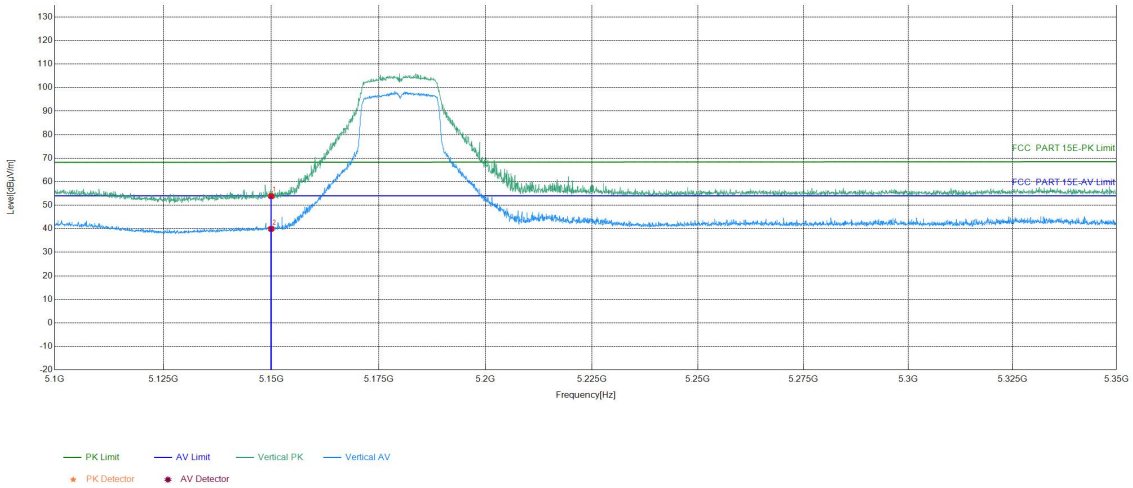

Suspected List									
NO	Freq. [MHz]	Factor [dB]	Reading [dBμV]	Level [dBμV/m]	Limit [dBμV/m]	Margin [dB]	Result	Polarity	Remark
1	5150	23.98	29.85	53.83	68.26	14.43	PASS	Vertical	PK
2	5150	23.98	15.96	39.94	54.00	14.06	PASS	Vertical	AV

EUT_Name		Test_Model	
Test_Mode	802.11 n(HT40) Transmitting	Test_Frequency	5190MHz
Tset_Engineer	chenjun	Test_Date	2025/04/22
Remark			

Test Graph

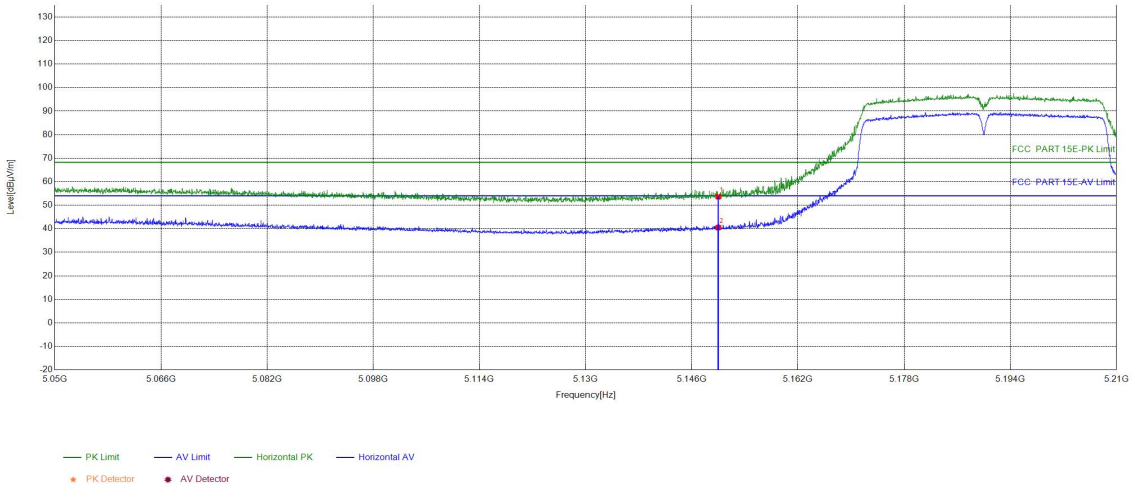

Suspected List									
NO	Freq. [MHz]	Factor [dB]	Reading [dBμV]	Level [dBμV/m]	Limit [dBμV/m]	Margin [dB]	Result	Polarity	Remark
1	5150	24.08	29.54	53.62	68.20	14.58	PASS	Horizontal	PK
2	5150	24.08	16.44	40.52	54.00	13.48	PASS	Horizontal	AV

EUT_Name		Test_Model	
Test_Mode	802.11 n(HT40) Transmitting	Test_Frequency	5190MHz
Tset_Engineer	chenjun	Test_Date	2025/04/22
Remark			

Test Graph

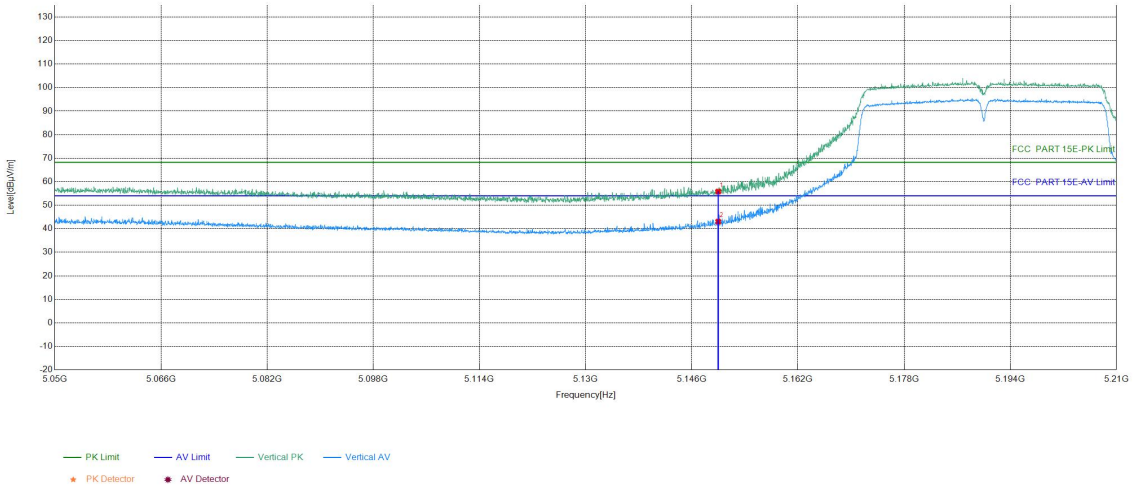

Suspected List									
NO	Freq. [MHz]	Factor [dB]	Reading [dBμV]	Level [dBμV/m]	Limit [dBμV/m]	Margin [dB]	Result	Polarity	Remark
1	5150	24.08	31.73	55.81	68.20	12.39	PASS	Vertical	PK
2	5150	24.08	18.96	43.04	54.00	10.96	PASS	Vertical	AV

EUT_Name		Test_Model	
Test_Mode	802.11 ac(VHT20) Transmitting	Test_Frequency	5180MHz
Tset_Engineer	chenjun	Test_Date	2025/04/22
Remark			

Test Graph

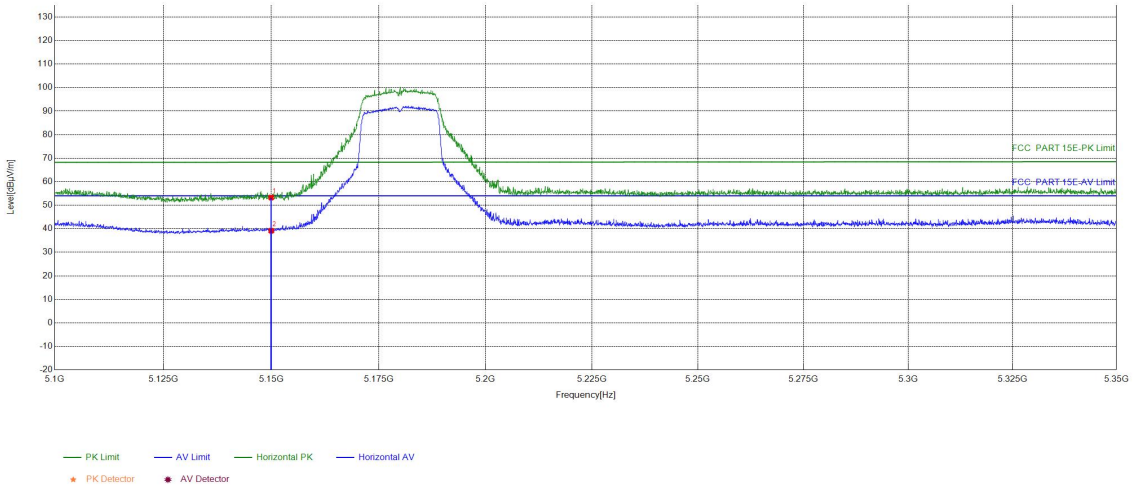

Suspected List									
NO	Freq. [MHz]	Factor [dB]	Reading [dBμV]	Level [dBμV/m]	Limit [dBμV/m]	Margin [dB]	Result	Polarity	Remark
1	5150	23.98	29.29	53.27	68.26	14.99	PASS	Horizontal	PK
2	5150	23.98	15.17	39.15	54.00	14.85	PASS	Horizontal	AV

EUT_Name		Test_Model	
Test_Mode	802.11 ac(VHT20) Transmitting	Test_Frequency	5180MHz
Tset_Engineer	chenjun	Test_Date	2025/04/22
Remark			

Test Graph

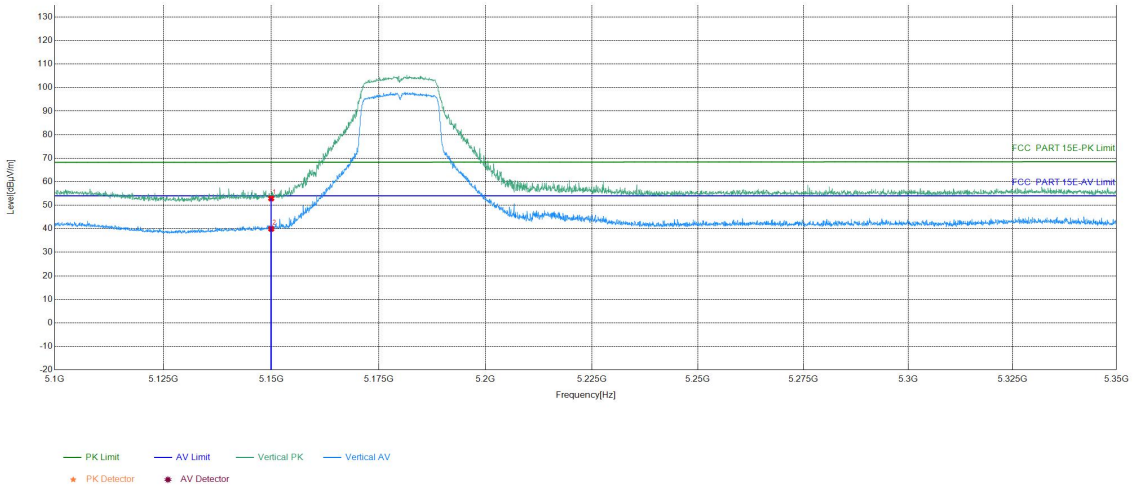

Suspected List									
NO	Freq. [MHz]	Factor [dB]	Reading [dBμV]	Level [dBμV/m]	Limit [dBμV/m]	Margin [dB]	Result	Polarity	Remark
1	5150	23.98	28.89	52.87	68.26	15.39	PASS	Vertical	PK
2	5150	23.98	15.97	39.95	54.00	14.05	PASS	Vertical	AV

EUT_Name		Test_Model	
Test_Mode	802.11 ac(VHT40) Transmitting	Test_Frequency	5190MHz
Tset_Engineer	chenjun	Test_Date	2025/04/22
Remark			

Test Graph

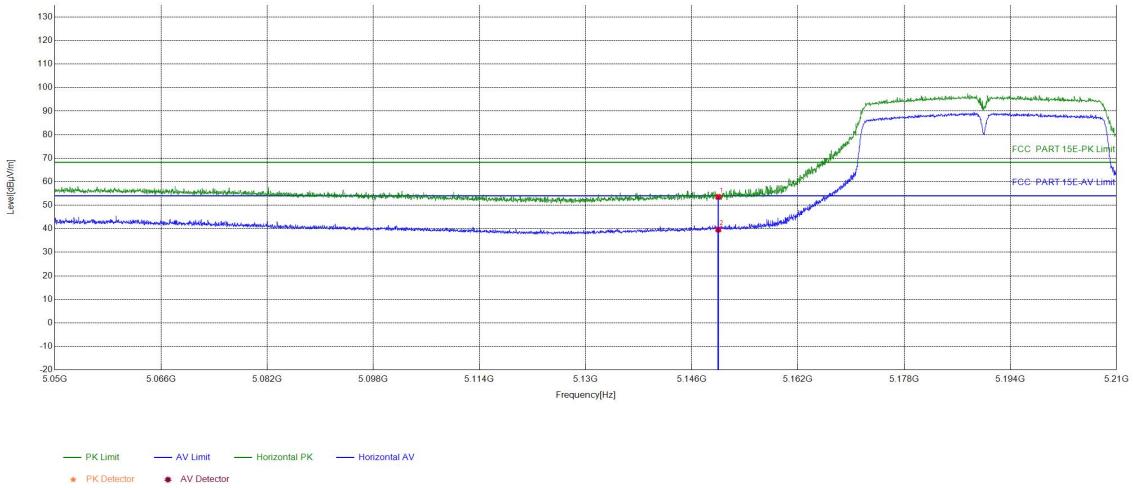

Suspected List									
NO	Freq. [MHz]	Factor [dB]	Reading [dBμV]	Level [dBμV/m]	Limit [dBμV/m]	Margin [dB]	Result	Polarity	Remark
1	5150	24.08	29.45	53.53	68.20	14.67	PASS	Horizontal	PK
2	5150	24.08	15.58	39.66	54.00	14.34	PASS	Horizontal	AV

EUT_Name		Test_Model	
Test_Mode	802.11 ac(VHT40) Transmitting	Test_Frequency	5190MHz
Tset_Engineer	chenjun	Test_Date	2025/04/22
Remark			

Test Graph

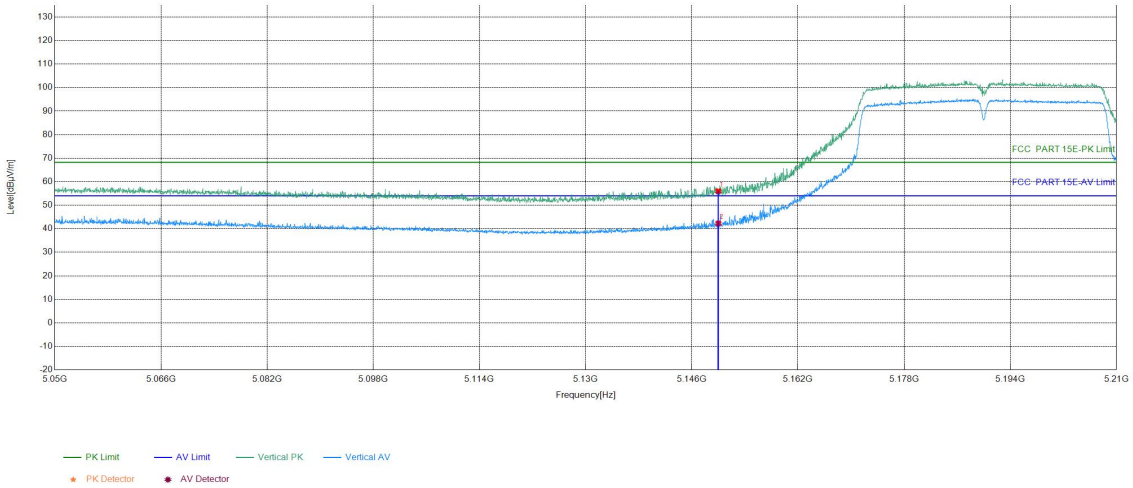

Suspected List									
NO	Freq. [MHz]	Factor [dB]	Reading [dBμV]	Level [dBμV/m]	Limit [dBμV/m]	Margin [dB]	Result	Polarity	Remark
1	5150	24.08	31.89	55.97	68.20	12.23	PASS	Vertical	PK
2	5150	24.08	18.18	42.26	54.00	11.74	PASS	Vertical	AV

EUT_Name		Test_Model	
Test_Mode	802.11 ax(HE20)Transmitting	Test_Frequency	5180MHz
Tset_Engineer	chenjun	Test_Date	2025/04/22
Remark			

Test Graph

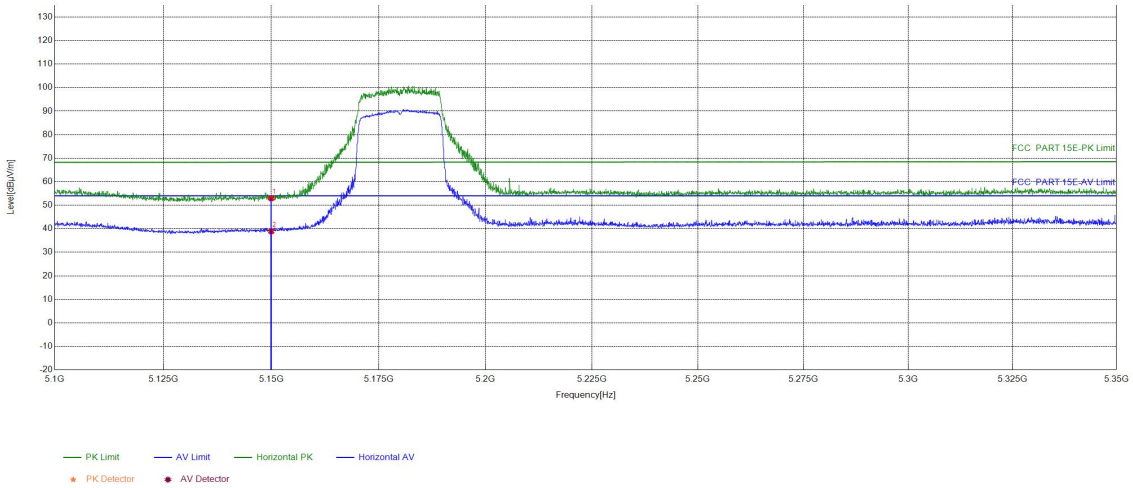

Suspected List									
NO	Freq. [MHz]	Factor [dB]	Reading [dBμV]	Level [dBμV/m]	Limit [dBμV/m]	Margin [dB]	Result	Polarity	Remark
1	5150	23.98	28.95	52.93	68.26	15.33	PASS	Horizontal	PK
2	5150	23.98	14.95	38.93	54.00	15.07	PASS	Horizontal	AV

EUT_Name		Test_Model	
Test_Mode	802.11 ax(HE20)Transmitting	Test_Frequency	5180MHz
Tset_Engineer	chenjun	Test_Date	2025/04/22
Remark			

Test Graph

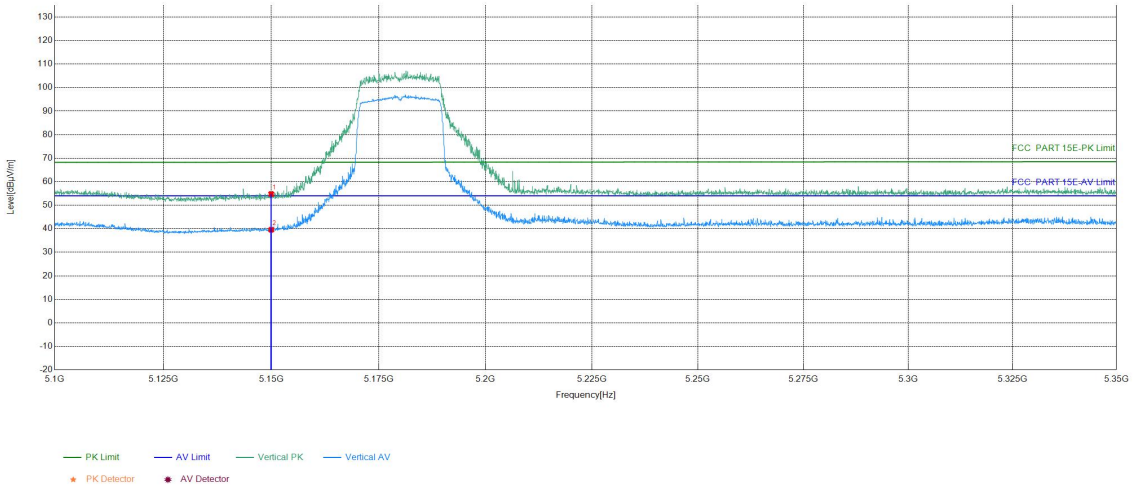

Suspected List									
NO	Freq. [MHz]	Factor [dB]	Reading [dBμV]	Level [dBμV/m]	Limit [dBμV/m]	Margin [dB]	Result	Polarity	Remark
1	5150	23.98	30.78	54.76	68.26	13.50	PASS	Vertical	PK
2	5150	23.98	15.59	39.57	54.00	14.43	PASS	Vertical	AV

EUT_Name		Test_Model	
Test_Mode	802.11 ax(HE40)Transmitting	Test_Frequency	5190MHz
Tset_Engineer	chenjun	Test_Date	2025/04/22
Remark			

Test Graph

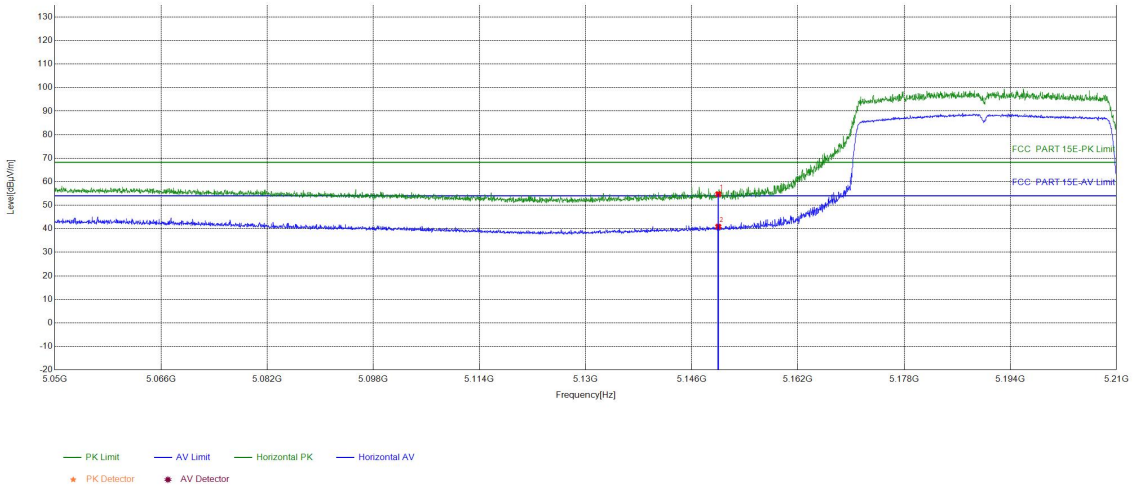

Suspected List									
NO	Freq. [MHz]	Factor [dB]	Reading [dBμV]	Level [dBμV/m]	Limit [dBμV/m]	Margin [dB]	Result	Polarity	Remark
1	5150	24.08	30.64	54.72	68.20	13.48	PASS	Horizontal	PK
2	5150	24.08	16.82	40.90	54.00	13.10	PASS	Horizontal	AV

EUT_Name		Test_Model	
Test_Mode	802.11 ax(HE40)Transmitting	Test_Frequency	5190MHz
Tset_Engineer	chenjun	Test_Date	2025/04/22
Remark			

Test Graph

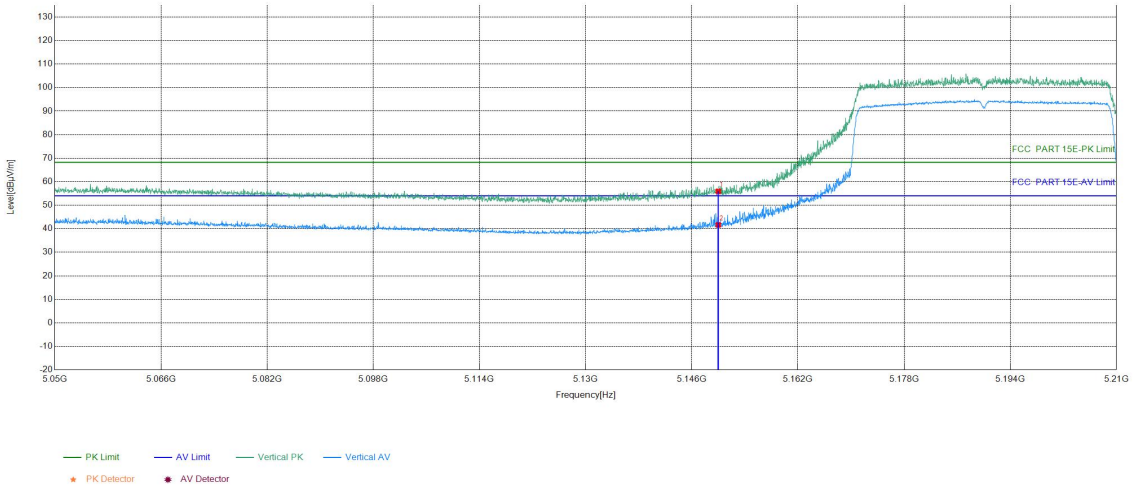

Suspected List									
NO	Freq. [MHz]	Factor [dB]	Reading [dBμV]	Level [dBμV/m]	Limit [dBμV/m]	Margin [dB]	Result	Polarity	Remark
1	5150	24.08	31.82	55.90	68.20	12.30	PASS	Vertical	PK
2	5150	24.08	17.56	41.64	54.00	12.36	PASS	Vertical	AV

EUT_Name		Test_Model	
Test_Mode	802.11 a Transmitting	Test_Frequency	5745MHz
Tset_Engineer	chenjun	Test_Date	2025/04/22
Remark			

Test Graph

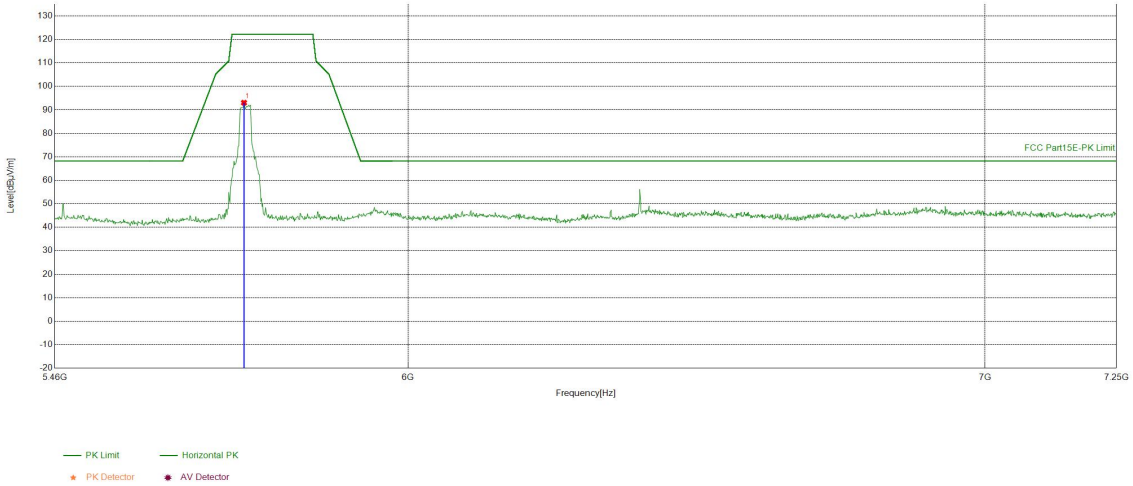

Suspected List									
NO	Freq. [MHz]	Factor [dB]	Reading [dBμV]	Level [dBμV/m]	Limit [dBμV/m]	Margin [dB]	Result	Polarity	Remark
1	5742.9615	-5.52	98.56	93.04	122.20	29.16	PASS	Horizontal	PK