User Manual

V1.0

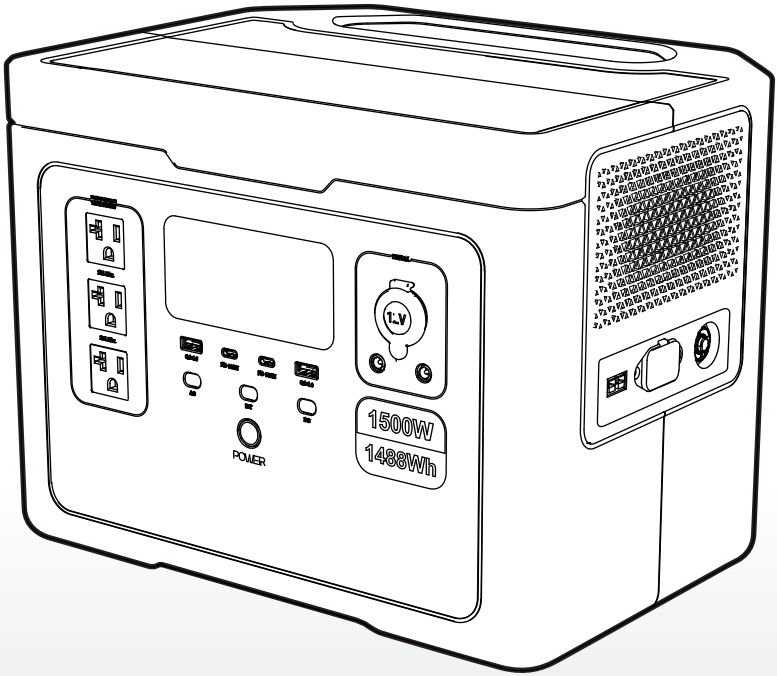

S 015

1500W Portable Power Station

Contents

Product List 01

Product Description 02-04

- Specifications 02
- Function Description 03
- LCD Screen Description 04

Instructions for Use 05-06

- Power ON 05
- Power OFF 05
- LCD Screen 06
- Battery Capacity Circle 06

Recharge Methods 07-09

- AC Charging 07
- Solar Charging 07-08
- Car Charging 09

Other Functions 10-12

- Boost Mode 10
- Frequency Switching 10
- AC Input Overload Protection 11
- EPS Mode 11-12

Error Code & Trouble Shooting 13-14

Storage and Maintenance 15

FAQ(Frequently Asked Question) 16

FCC Warning 17

Disclaimer

Before using this product, please read this user manual carefully to ensure that you fully understand the product and can use it correctly. After reading this user manual, please keep it in a safe place for future reference. Improper use of this product may cause serious injury to yourself or others, or result in product damage and property loss. By using this product, you are deemed to have understood, recognize and accepted all the terms and contents of this document. The Company shall not be responsible for any damages caused by the user's failure to use this product in accordance with this user manual.

In accordance with laws and regulations, the company reserves the right of final interpretation of this document and all documents related to this product. This document is subject to change, update, revision or termination without notice.

Please visit our website for the latest product information.

- The company shall not be held responsible for any damage caused by force majeure(e.g. fire, typhoon, flood, earthquake) or use under other abnormal circumstances by the customer.
- The company bears no responsibility for loss caused by the use of non-standard connectors.
- The Company shall not be liable for any damage caused by non-compliance with the standard operation.
- Please do not disassemble the power station. Otherwise, the warranty will be voided.

APP

You can connect this product via APP to view information, control the device and personalize settings.

Scan the QR code to download our Smart Control APP.

Avaliable On App Store

Avaliable On Google Play

What's in the Box

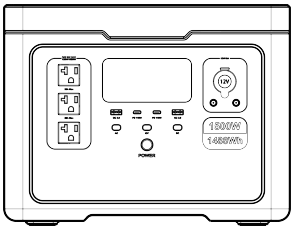

Power Station*1

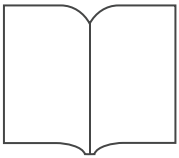

User Manual*1

Warranty*1

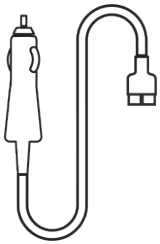

Lighter to Anderson Cable*1

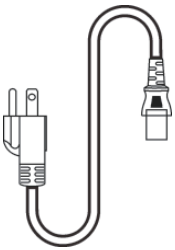

AC Charging Cable*1

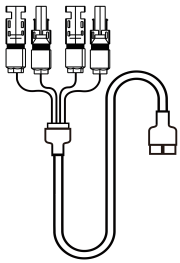

MC4 to Anderson Cable*1

Parameter Specifications

Output		
AC Output	Rated Voltage	120Vac
	Rated Power	1500W
	Boost Mode Power	1700W
	Peak Power	3600W
	Frequency	60Hz
DC 12V & Car Lighter Output	Rated Voltage	12V
	Rated Current	10A
USB–A Output	5V3A; 9V2A; 12V1.5A【18W Max】	
USB–C Output	5V3A，9V3A，15V3A，20V5A，28V5A【140W Max】	

Input	
AC Charge Input	90~140Vac 7A 50/60Hz 400W
PV Input	12~29Vdc MPPT: 16~26V 25A 480W Max
Car Charge Input	12~15.5V 8.5A Max

Battery	
Rated Capacity	1488Wh
Rated Voltage	32Vdc
Battery Type	LiFePO4
IP Grade	IP21
Working Temperature	32°F~104°F（0°C~40°C）
Storage Temperature	–4°F~149°F（–20°C~65°C）
Dimension	14.1*10.7*10.89in（359*271.4*276.7mm）
Net Weight	30.5lb（13.85kg）

Note：When two DC 5521 and Car Lighter ouput potrs are all connected to loads, these three ports share 120W output.

Product Description

Function Description

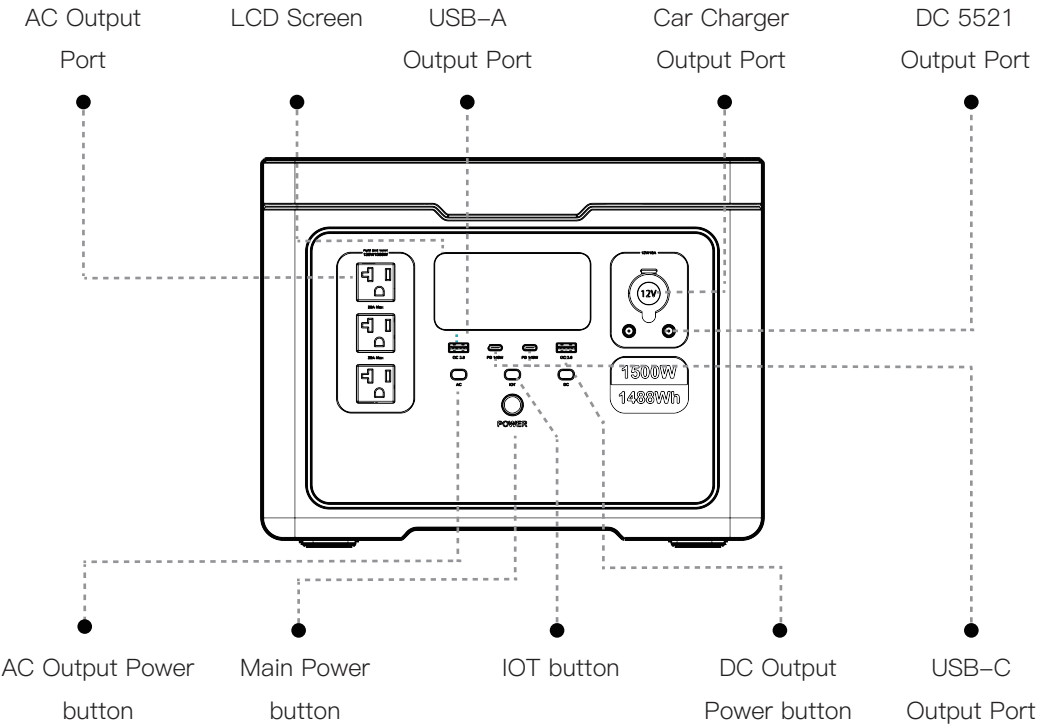

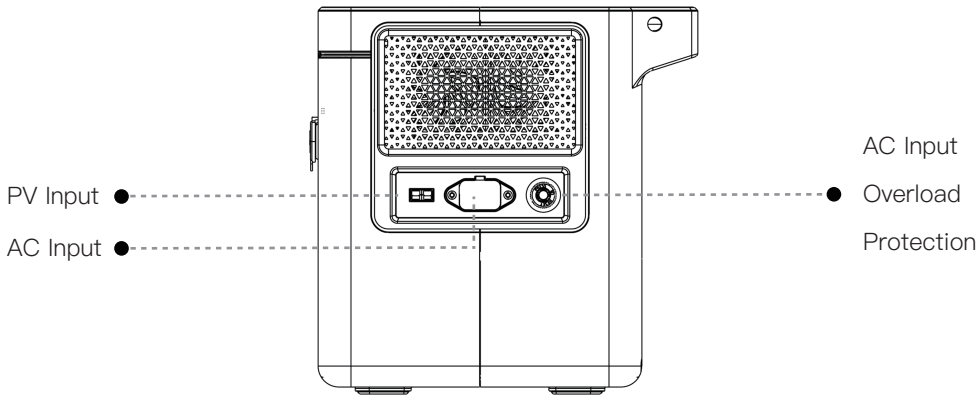

Product Description

LCD Screen Description

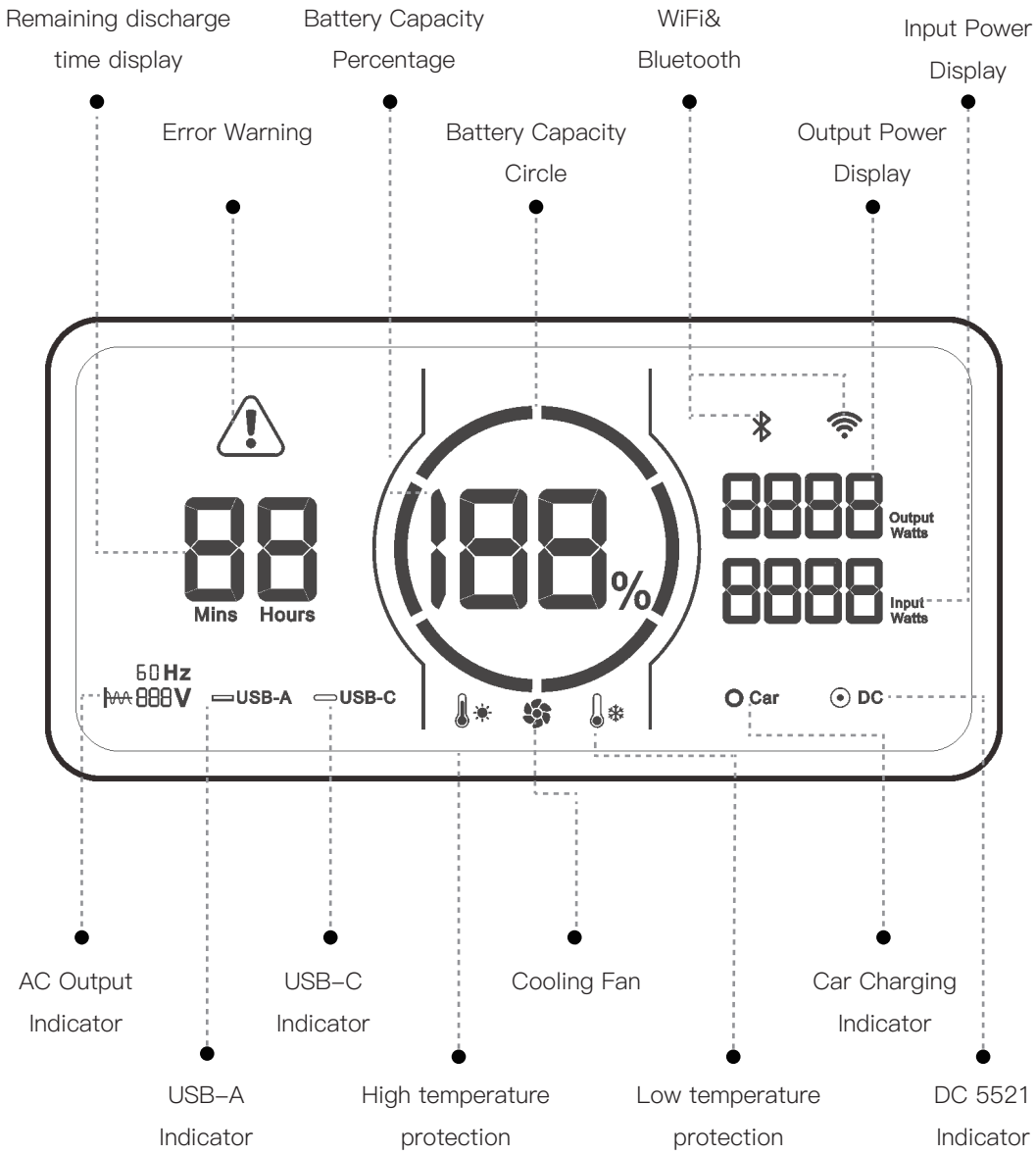

Instructions for Use

Power ON：

Main Power：

1. Press and hold the main power button for 3 seconds.
2. The capacity circle and percentage will light up, confirming the screen is functioning.
3. The button light will light up and switch to a breathing mode.
4. The fan will start for a while, indicating the power is on.

AC/DC Output Power：

1. When the main power is on, press the button for the desired functional area.
2. The corresponding icon on the LCD will light up, indicating the function is active.

Power OFF：

Main Power：

1. Press and hold the main power button for 3 seconds.
2. Release the button when the screen displays ”OFF” and LCD Screen will go out.

AC/DC Output Power：

1. When the main power is on, press the button again for the desired functional area.
2. The corresponding icon on the LCD will go out, indicating the function is disabled.

Notice:

1. It is recommended to turn off DC and AC output power buttons before turning off main power button.
2. Input port on the side of the product functions independently of the main power button.

LCD Screen

Sleep Mode：

1. When the main power is on, short press the main power button, the LCD Screen will go out, while the power station is still functioning.
2. When the AC/DC output power button is on as well, it will switch to sleep mode automatically within 5 minutes of inactivity and the LCD screen will automatically go out.
3. When the power station is in operation, the LCD Screen will light up again.

Automatic Shut Down：

1. When the main power is on, it will automatically shut down after 5 minutes without operation.
2. When the AC/DC output power button is on as well, it will automatically shut down after 6 hours without any load connected.

Battery Capacity Circle

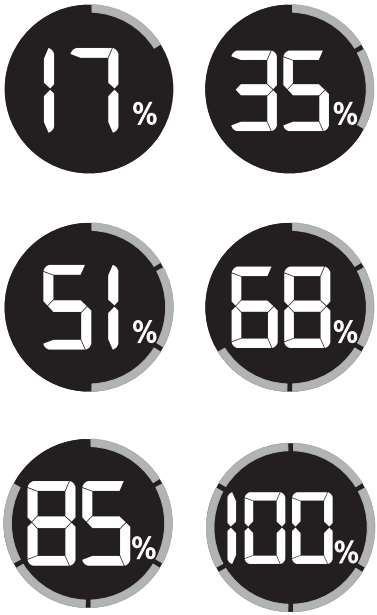

The battery capacity circle indicates the battery remaining power and is equally divided into six segments: 17%, 35%, 51%, 68%, 85%, and 100%.

Discharge：The capacity segments will go out one by one and the rest luminous segments indicate the remaining capacity.

Charge：The capacity circle will flash clockwise and the real-time input power is displayed on the right side of the screen.(Input Watts)

Fully Charged：The Battery Capacity Circle will remain constant on and the fan icon will go out.

Reminder：Unplug when charging is complete.

Recharge Methods

AC Charging

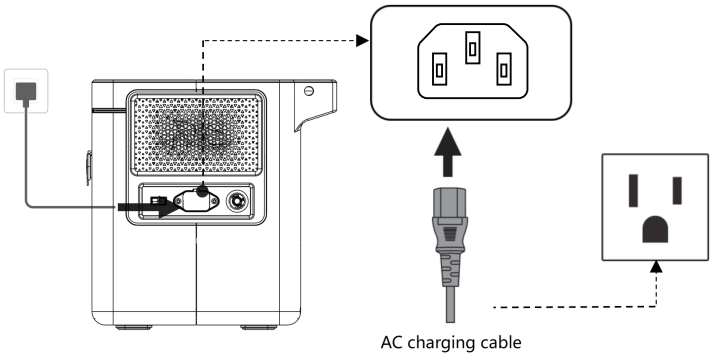

1. Connect AC charging cable to the power station as shown in the above picture.
2. The input power will be displayed on the screen, showing that the device starts charging.

Solar Charging

1. Use Anderson–MC4 charging cable to connect power station's anderson port with solar panels' MC4 connectors.
2. The capacity circle on the screen will start rotating, and the input power will be displayed, indicating that the device is charging via solar power.

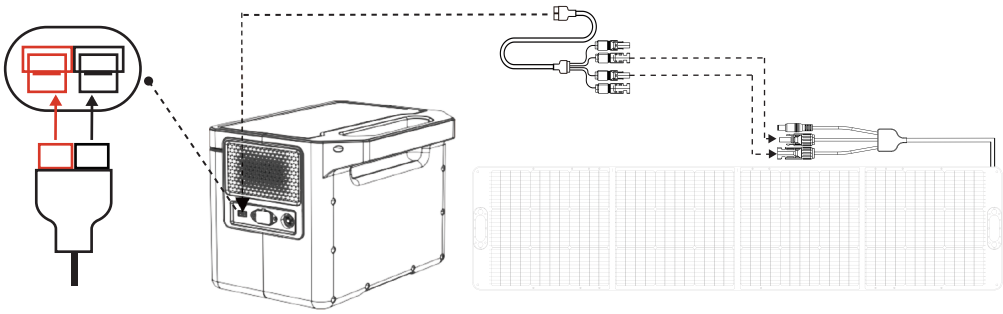

Connection Guide

Connect 2*240W solar panels at most in parallel to get maximum power at 479.7W.

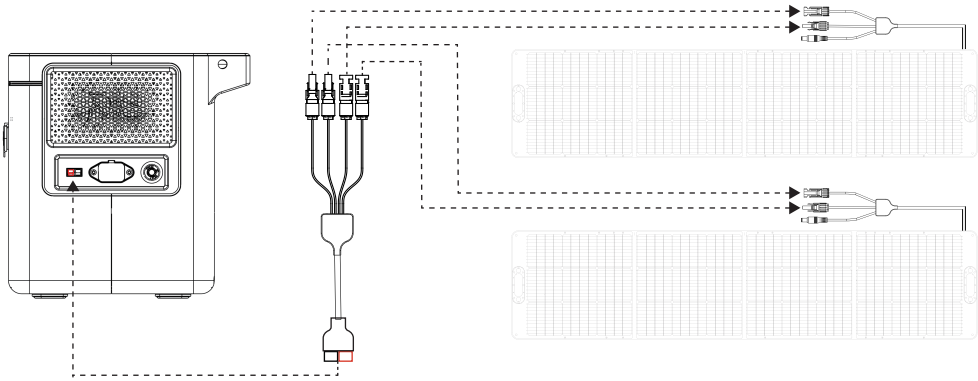

Notice:

1. Make sure the solar panels meet the following requirements:

   OCV: 29V；Current: 25A；Max Power: 480W.

2. Make sure that the solar panel is positioned at a perpendicular angle to the sun's rays for the best solar energy conversion efficiency.

Recharge Methods

Car Charging

1. The car charging port supports 12~15.5V/8.5A car charging input electricity.
2. To protect your car battery from power loss and prevent the car from being unable to start, please ensure that the car is started before connecting car charging cable to car lighter.
3. At the same time, please check if the car charging port and the car lighter of the car charging input cable are in good connection.

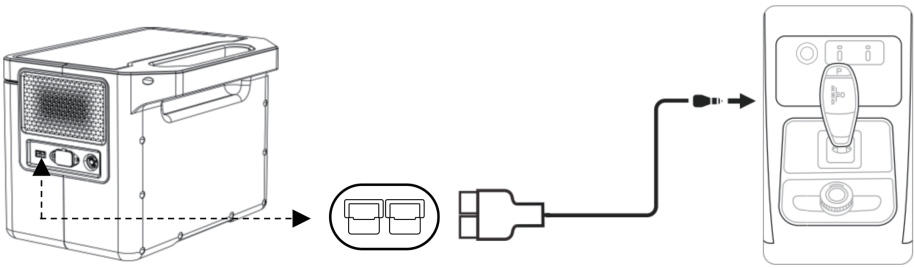

Other Functions

Boost Mode

To prevent operational failures caused by overload protection, the power station automatically activates Boost Mode when the total output power exceeds the rated 1500W output power. It enables the power station to supply up to 1700W power to high-wattage devices.

Notice:

1. Boost Mode is enabled by default.
2. Boost Mode is not available when the AC output on and AC charging are turned on at the same time. In this case, the power station is in the bypass mode.
3. The boost mode is suitable for most electrical appliances such as heating and motor-driven equipment, some appliances equipped with voltage protection like precision instrument are not applicable to the boost mode.

Frequency Switching

1. Turn off the AC and DC output power buttons.
2. Simultaneously press and hold DC output power button and main power button for 3-5 seconds, till the frequency sign flashes on the screen.
3. Press AC output power button to choose frequency ”50” or ”60”.
4. Long press the main power to confirm, then the abbreviation ”SUC” will flash and the battery circle will appear on the screen.
5. Long press the main power button to exit the setting mode.

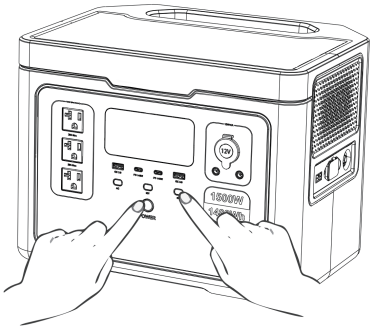

AC Input Overload Protection

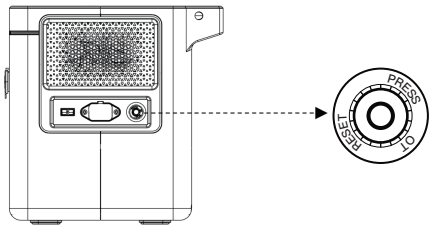

If the AC input receives a continuous current that is greater than 15A, the protector will blow. And the circuit will be cut off to protect the power station.

Please disconnect all the input connections for safety reason, and make sure the input current is lower than 15A. Then press the Overload Protection button to resume charging.

EPS(Emergency Power Supply) Function

1. EPS(Emergency Power Supply) function is enabled by default.
2. Connect the power station to a wall outlet with the AC charging cable, then press the AC output power button and connect your devices. In this case, AC power comes from the power grid instead of battery itself.
3. If the power grid suddenly cuts off, the power battery will automatically take over the charging process within 20ms.

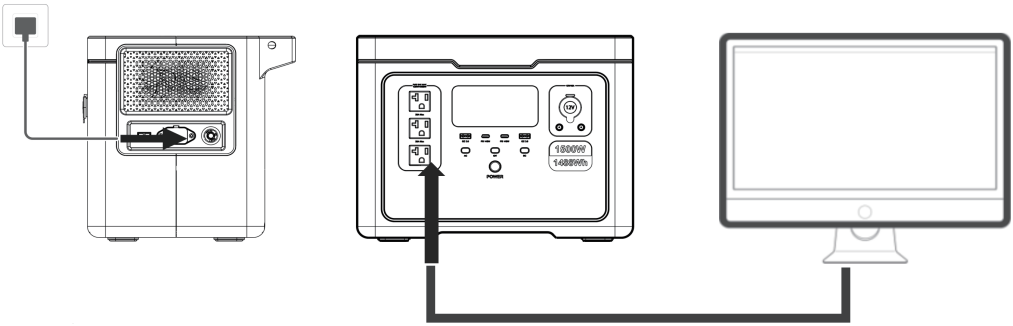

EPS(Emergency Power Supply) Function

Notice:

1.This is not a professional UPS function and does not support 0ms switching. Thus, do not connect the power station to equipment requiring an uninterrupted power supply such as data servers, work station and so on.

2. It is recommended to charge only one device at a time if you would like to use EPS function.

3.The total input and output power to the power station should lower than 1500W. Otherwise, the power station will report an overload warning and shut down in 1 minute.

Error Code & Trouble Shooting

Error Code	Status	Cause	Solution
E000	60Hz 888V + ⚠ Flashing, no output	AC output short circuit protection	Press the AC output power button to restore.
E001	60Hz 888V + DC + ⚠ Flashing, no output	Output overload protection	Press the AC and DC output power buttons to restore.
E002	AC/DC output ion flashes and the corre–spoding port has no output.	AC Battery low voltage protection	Battery capacity below 20%, load ≤ 300W, charge the device in time and restart the corresponding function button to restore.
E003	60Hz 888V Flashing, no output	AC output over voltage and low voltage protection	Press the AC output power button to restore.
E004	60Hz 888V Flashing, no output	Abnormal AC input frequency	Automactically restores after frequency returning to normal.
E005	⚠ Flashing, no output at all ports	High and low bus voltage or over current	Press the AC output power button to restore.
E006	60Hz 888V + + ⚠ Flashing, no output at all ports	Inverter over temperature	Stop charging and rest the device to restore.
E010	Car + ⚠ Flashing, no output at all ports	Overload and short circuit of the Car lighter	Press the DC output power button to restore.
E011	USB-A + ⚠ Flashing, no output at all ports	Overload and short circuit of the USB–A port	Press the DC output power button to restore.

Error Code & Trouble Shooting

Error Code	Status	Cause	Solution
E012	USB-C + Flashing, no output at all ports	Overload and short circuit of the USB–C port	press the DC output button to restore.
E013	E013 + no output at all ports	Low voltage protection of battery over discharge	Restart the device after charging it.
E017	E017 + flashing	Hardware problem	Press the main power button to restore.
E020	Flashing	BMS communica tion failure	Check BMS communication cable.
E021	E021 flashing, no output at all ports	Over voltage of single battery cell	Reset the device and wait for rhe cell voltage returning to noraml.
E022	E021 flashing, no output at all ports	Under Voltage of single battery cell	Connect the AC charging cable and charge the device until the voltage returns to normal.
E023	E023 flashing, no output at all ports	Battery total voltage too high	Rest the device and wait for the cell voltage returns to normal.
E024	Flashing, all outputs off	Battery total voltage too high	Connect the AC charging cable and charge the device until the voltage returns to normal.
E025	+ Flashing, no output at all ports	High temperature of battery cell	The device will automatically return to normal when the temperature returns to normal.
E026	+ Flashing, no output at all ports	Low temperature of battery cell	The device will automatically return to normal when the temperature returns to normal.
E027	50Hz 888V flashing AC function off, DC output normal, AC greater than 1700VA or AC+DC greater than 1700W	System overload, AC output is over 1700VA or the total AC and DC output is over 1700W.	Press the AC power button to restore.

Storage and Maintenance

1. Please use a dry, soft, clean cloth or paper towel to gently wipe the product.
2. Please store the power station away from water resources, heat resources, metal objects and chemical substances.
3. Store it in a dry, well-ventilated place at room temperature. The recommended storage temperature is -4°F~149°F (-20°C~65°C).
4. Charge it to around 60% capacity and turn off the product before storing it.
5. For long-term storage, it is recommended to fully discharge and then fully charge the battery(0%-100%) once every 3 months. And the warranty will be voided if the power station has not been charged or discharged in 6 months.

FAQ

1. What type of battery does the product use?

The product uses high-quality lithium iron phosphate (LiFePO4) batteries.

2. What equipment can be connected to the AC output port?

The AC output port has a rated power of 1500W and peak power of 3600W, making it suitable for most household appliances. However, it is recommended to confirm the power requirements of your appliances and the total power consumption of all connected devices is below the rated power.

3. How long can the product provide power to my appliance?

The LCD screen displays the estimated runtime based on the current power usage. Estimated runtime varies from different loads.

4. Can this product be charged using a gasoline or diesel generator?

Yes, it can be charged with a generator that has a built-in pure sine wave inverter. The company will not be responsible for any product damage caused by using a generator without this feature.

5. How can I tell if the product is charging?

When charging, the capacity circle on the LCD screen will rotate, and the input power will be displayed.

6. Can this product be brought on board a plane?

No, this product cannot be brought on board a plane due to aviation regulations for lithium-based batteries.

7. Is the actual output capacity of the product the same as the capacity specified in the user manual?

The capacity shown in the user manual is the rated capacity of the battery pack. Due to efficiency losses during charging and discharging, the actual output capacity may be slightly lower than the rated capacity.

FCC Warning

This device complies with part 15 of the FCC Rules. Operation is subject to the following two conditions:

(1)This device may not cause harmful interference, and (2) this device must accept any interference received, including interference that may cause undesired operation. Any changes or modifications not expressly approved by the party responsible for compliance could void the user's authority to operate the equipment.

Notice:

This equipment has been tested and found to comply with the limits for a Class B digital device, pursuant to part 15 of the FCC Rules. These limits are designed to provide reason– able protection against harmful interference in a residential instal– lation. This equipment generates uses and can radiate radio frequency energy and, if not installed and used in accordance with the instructions, may cause harmful interference to radio communications. However, there is no guarantee that interference will not occur in a particular installation. If this equipment does cause harmful interference to radio or television reception, which can be determined by turning the equipment off and on, the user is encouraged to try to correct the interference by one or more of the following measures:

(1)Reorient or relocate the receiving antenna.

(2)Increase the separation between the equipment and receiver.

(3)Connect the equipment into an outlet on a circuit different from that to which the receiver is connected.

(4)Consult the dealer or an experienced radio/TV technician for help.

This equipment complies with FCC radiation exposure limits set forth for an uncontrolled environment.

This equipment should be installed and operated with minimum distance 20cm between the radiator & your body.