User Manual

VUSIGN

AIR PURIFIER

NO.AZ5101VC

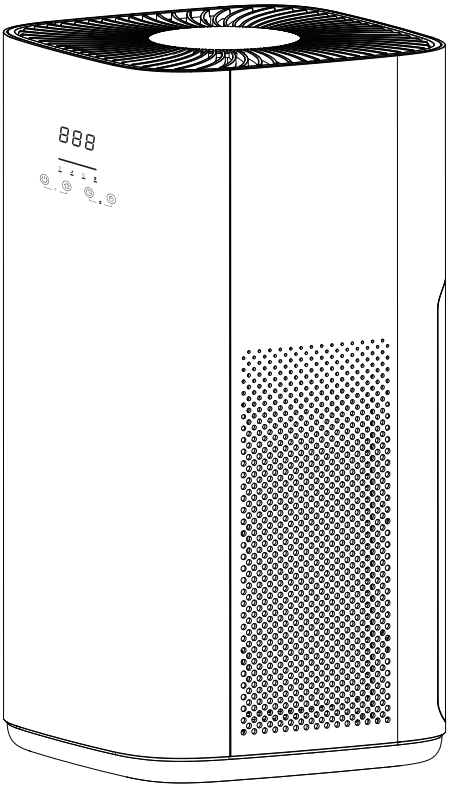

· Please read this manual carefully before use.
· The company reserves the right to interpret these instructions.
· The product's appearance may vary from the images shown.

READ AND SAVE THESE INSTRUCTIONS
IMPORTANT SAFETY NOTES

This product should be used only as specified in this manual. Any other use may result in serious injury.
When using electrical appliances, always follow basic safety precautions to reduce the risk of fire, electric shock, or personal injury, including the following:

Before Use

- WARNING: To reduce the risk of fire or electric shock, do not use this unit with a solid-state speed control device.
- Connect the power plug to a power source that matches the specified voltage.
- To avoid fire or electric shock hazards, always hold the plug when unplugging. Do not pull the power cord.
- To prevent damage to the power cord, electric shocks, or fire hazards, do not pull, bend, twist, or intentionally damage the power cord.
- Do not use the unit if the power cord, plug, or socket is damaged. Contact the manufacturer or a qualified technician for a replacement.
- To prevent electric shocks or fire hazards caused by a damaged power cord, do not place heavy objects on it.
- Do not touch the power plug with wet hands to avoid the risk of electric shock.

In Use

- Remove the plastic layer from the filter before use. Do not operate the unit without a filter.
- Do not drop or insert any objects into the unit's openings.
- Do not block the air inlet or outlet.
- Do not place near hot objects (e.g., stoves or areas with open flames).
- Pull the plug immediately if any malfunction occurs, such as smoking or unusual odors.
- To ensure proper airflow and efficient purification, keep enough space around the air purifier.

Restrictions On Use

- Do not use the unit in areas with open flames or flammable chemicals.
- Do not use the unit in areas with propane, gas, natural gas, or other flammable substances to avoid electric shock, fire, or damage.
- Do not use the unit while using bug spray.
- To prevent electric shock, fire hazards, or other damage, do not use the unit in damp, unstable, or high-temperature areas, such as bathrooms or similar environments.
- This appliance has a polarized plug (one blade is wider than the other) to reduce the risk of electric shock. It is designed to fit into a polarized outlet only one way. If the plug does not fit fully, reverse it. If it still does not fit, contact a qualified electrician. Do not attempt to bypass this safety feature.

Cleaning Notice

- Do not clean and reuse the composite filter. Do not clean the unit with corrosive chemical cleansers.
- Use a soft cloth to clean the unit to prevent damage or malfunction of the sensors.
- To prevent damage, electric shock, or fire, do not clean the unit with ethyl alcohol or organic solvents.
- To prevent electric shock or fire, turn off the power and remove any foreign objects from the plug when cleaning or not using the unit.

Storage

- Store the unit in a dry place.
- Keep it away from flammable or combustible materials.
- Cover it with the protective bag.

Tips

- Not suitable for use by individuals with disabilities, sensory impairments, cognitive disorders, or children without supervision.
- Do not set, lean on, or push against the unit to avoid injury.
- Unplug the unit before moving it.
- If the power cord or any part of the unit is damaged, it must be replaced by the manufacturer, a service agent, or a similarly qualified person to prevent hazards.
- Do not use the unit and contact the supplier to replace the filter if it generates a peculiar smell while running.

PRODUCT DETAILS

Product List

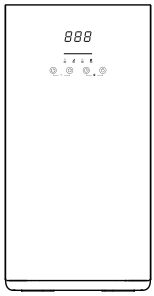

Air Purifier

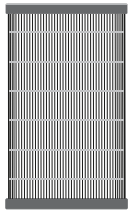

Air Filter
(Pre-installed inside the purifier. Remove the packaging bag before use.)

User Manual

APP User Manual

Warranty Card

Product Structure

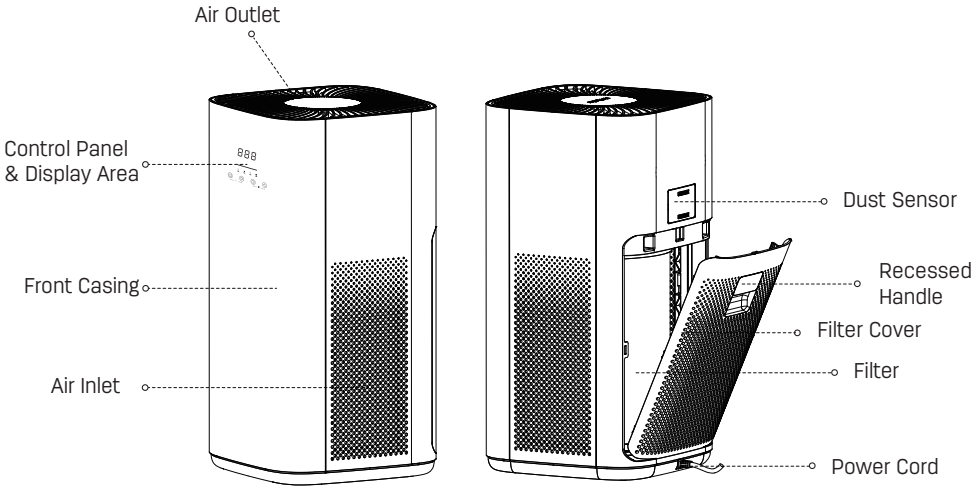

Front View

Back View

OPERATION GUIDE

Diagram of the Touch Control Panel

After the unit is powered on, it enters standby mode.

Power On/Off

"Wind speed" button - displays the wind speed level

a. Repeatedly touching this button switches between manual, automatic, and sleep modes: level 1, level 2, level 3, level 4, automatic mode, and sleep mode.
b. In automatic mode, the wind speed adjusts automatically based on air quality.
The air quality indicator displays the PM2.5 air quality status in real time:
Green light: Excellent
Blue light: Good
Yellow light: Average
Red light: Poor

"Timer" button - displays the set time

a. In both power-on and standby modes, touching the "Timer" button will first display the current timer setting (without switching) when the digital display shows PM2.5. Each subsequent touch will change the timer setting, with a beep sound to confirm. The timer options cycle through 1h, 2h, 3h... up to 12h, then "--h" (no timer). The digital display will show the timer setting for 5 seconds, then return to displaying the PM2.5 value. If setting a timer for power-on, the "--h" (no timer) option will not be shown. After showing the selected timer setting for 2 seconds, the unit enters countdown mode.
After the countdown ends:
a. Scheduled shutdown – If the unit is on, it will turn off at the set time.
b. Scheduled power-on – If in standby mode, the unit will turn on at the set time.

"Child lock" button - enables/disables Child Lock function

a. In working mode, touch and hold this button for 2 seconds to activate child lock mode. Touch and hold again for 2 seconds to deactivate child lock mode.

Touch and hold the [+] buttons for 2 seconds to enter Wi-Fi pairing mode

When the filter life expires, touch and hold the [+] buttons for 2 seconds to reset the filter life.

FILTER REPLACEMENT

1. Turn off the unit and disconnect the power.

⚠ Notice:

Turning off the purifier puts it in standby mode. To fully disconnect the power, unplug the power cord.

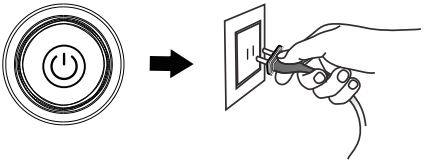

2. Open the back cover, hold the recessed handle on the cover and pull it outward

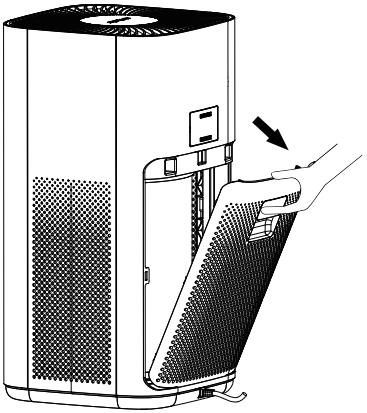

3. Remove the filter and wrap the used filter material in a trash bag to prevent contaminants from spreading indoors.

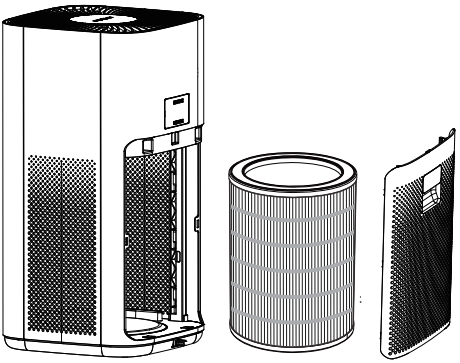

⚠ Notice:

a. Please dispose of the used filter as non-combustible waste.
b. The filter replacement cycle is approximately six months (actual lifespan may vary depending on the usage environment).
c. When the filter indicator turns red, it signals that the filter needs to be replaced.

FILTER REPLACEMENT

4. Align the new filter with the filter slot in the purifier and install it properly. Then, hold the recessed handle of the filter cover, align the bottom of the cover with the groove at the base of the unit, and close the cover. Plug in the power to start operation.

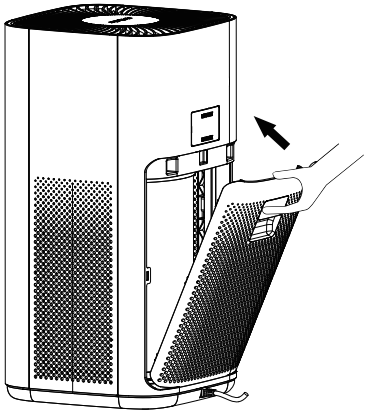

⚠ Notice:

a. Please carefully follow the filter replacement instructions to ensure the purifier's optimal performance.
b. Unplug the power cord and turn off the purifier before cleaning the purifier system.
c. Keep the interior of the purifier dry to prevent damage to the circuitry.
d. Use a vacuum cleaner to remove surface dust regularly to extend the life of the filter.

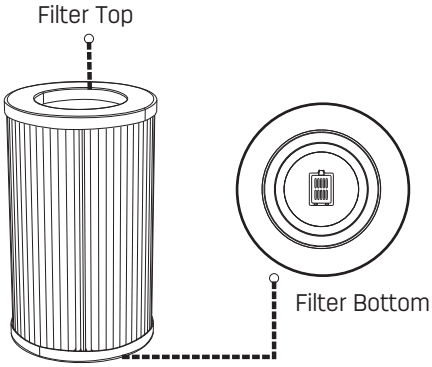

5. After replacing the filter, reset the filter reminder by touching and holding the

[+] buttons for 2 seconds.

⚠ Notice:

When installing the filter, make sure the bottom side is facing down.

COMMON TROUBLESHOOTING

If your air purifier is not functioning properly, please check the following before requesting a repair.

Phenomenon	Possible Cause	Solution
1. The machine does not start.	a.The power plug is not connected. b.The filter cover is not properly installed.	a.Reinsert the power plug b.Properly install the filter cover.
2. There is smell in the outlet.	a.There are many sources of pollution in the room. b.The filter is heavily polluted.	a.Open the windows to ventilate the room. b.Replace the filter with a new one.
3. Dust purification is ineffective, and air quality shows no improvement.	a.The filter is not installed. b.The unit is placed in a narrow space or near obstacles. c.The filter is too dirty.	a.Install the filter. b.Remove obstructions or change location. c.Clean or replace the filter.
4. The running noise is too loud.	a.The unit is not installed firmly enough. b.There is debris inside the unit.	a.Contact the after-sales service center. b.Remove any debris.
5. The buttons are not working.	a. The child lock be enabled.	a.Touch and hold the "Child Lock" button for 2 seconds to deactivate it.
6.The filter doesn't fit.	a. The filter is reversed.	a.Adjust the filter to the correct direction. Align the filter with the bottom groove and install it properly.

Error Code	Fault Description	Solution
E0	The filter cover is open	a. Close the filter cover tightly. b. If the issue persists, please contact customer service.
E1	The unit is tipped or tilted	Place the unit in an upright position.
EE	Filter life has expired.	a. Replace the filter and reset. Reset Operation: In standby mode, touch and hold the "⏲ + ⟲" buttons for 2 seconds. The machine will beep three times to indicate that the reset was successful.

⚠ Notice:
If the issue persists after performing the above checks, please contact the authorized repair shop or technical service center. Do not attempt to disassemble or repair the unit yourself, as this may cause injury or further damage to the device.

⚠ **WARNING**: To Reduce The Risk Of Fire, Electric Shock Or Injury To Persons, Do Not Use Replacement Parts That Have Not Been Recommended By The Manufacturer (e.g. Parts Made At Home Using A 3D Printer).

FCC Statement

This equipment has been tested and found to comply with the limits for a Class B digital device, pursuant to part 15 of the FCC rules. These limits are designed to provide reasonable protection against harmful interference in a residential installation. This equipment generates, uses and can radiate radio frequency energy and, if not installed and used in accordance with the instructions, may cause harmful interference to radio communications. However, there is no guarantee that interference will not occur in a particular installation. If this equipment does cause harmful interference to radio or television reception, which can be determined by turning the equipment off and on, the user is encouraged to try to correct the interference by one or more of the following measures:

−Reorient or relocate the receiving antenna.

−Increase the separation between the equipment and receiver.

−Connect the equipment into an outlet on a circuit different from that to which the receiver is connected.

−Consult the dealer or an experienced radio/TV technician for help.

To assure continued compliance, any changes or modifications not expressly approved by the party.

Responsible for compliance could void the user’s authority to operate this equipment. (Example− use only shielded interface cables when connecting to computer or peripheral devices).

This equipment complies with Part 15 of the FCC Rules. Operation is subject to the following two conditions:

(1) This device may not cause harmful interference, and

(2) This device must accept any interference received, including interference that may cause undesired operation.

FCC Radiation Exposure Statement:

The equipment complies with FCC Radiation exposure limits set forth for uncontrolled environment. This equipment should be installed and operated with minimum distance 20cm between the radiator and your body.