Huepar®

User Manual

Laser Distance Measure

S60/S80/S100/S120

English

Deutsch

Français

Italiano

Español

Русский

日本語

support@huepar.com

EN
ENGLISH

Scan the QR code for more language instructions.

DE
DEUTSCH

Nach weiteren sprachanleitungen suchen sie den code # ein.

FR
FRANÇAIS

Scannez le code qr pour plus d’ instructions dans d’ autres langues.

IT
ITALIANO

Scannerizzare il codice qr per controllare le istruzioni in altre lingue.

ES
ESPAÑOL

Escanea el código qr para ver más instrucciones en otros idiomas.

RU
РУССКИЙ

Просканируйте бинарный код для дополнительной лингвистической спецификации.

JP
JAPANESE

QR コードをスキャンすると、他の言語で説明が表示されます。

Thank you for purchasing Huepar S60/S100/S120 Laser Distance Measure.
Before using the product, please read this manual thoroughly to ensure proper use.

- **Product Overview**
- **Safety Instructions**
- **Battery Installation and Instructions**
- **Start the Instrument/Menu Setting**
- **Measurement & Calculation**
- **Addition / Subtraction**
- **Record Function**
- **Working Advice**
- **Error Code**
- **Specifications**
- **Instrument Maintenance**
- **Warranty**

Product Overview

Display

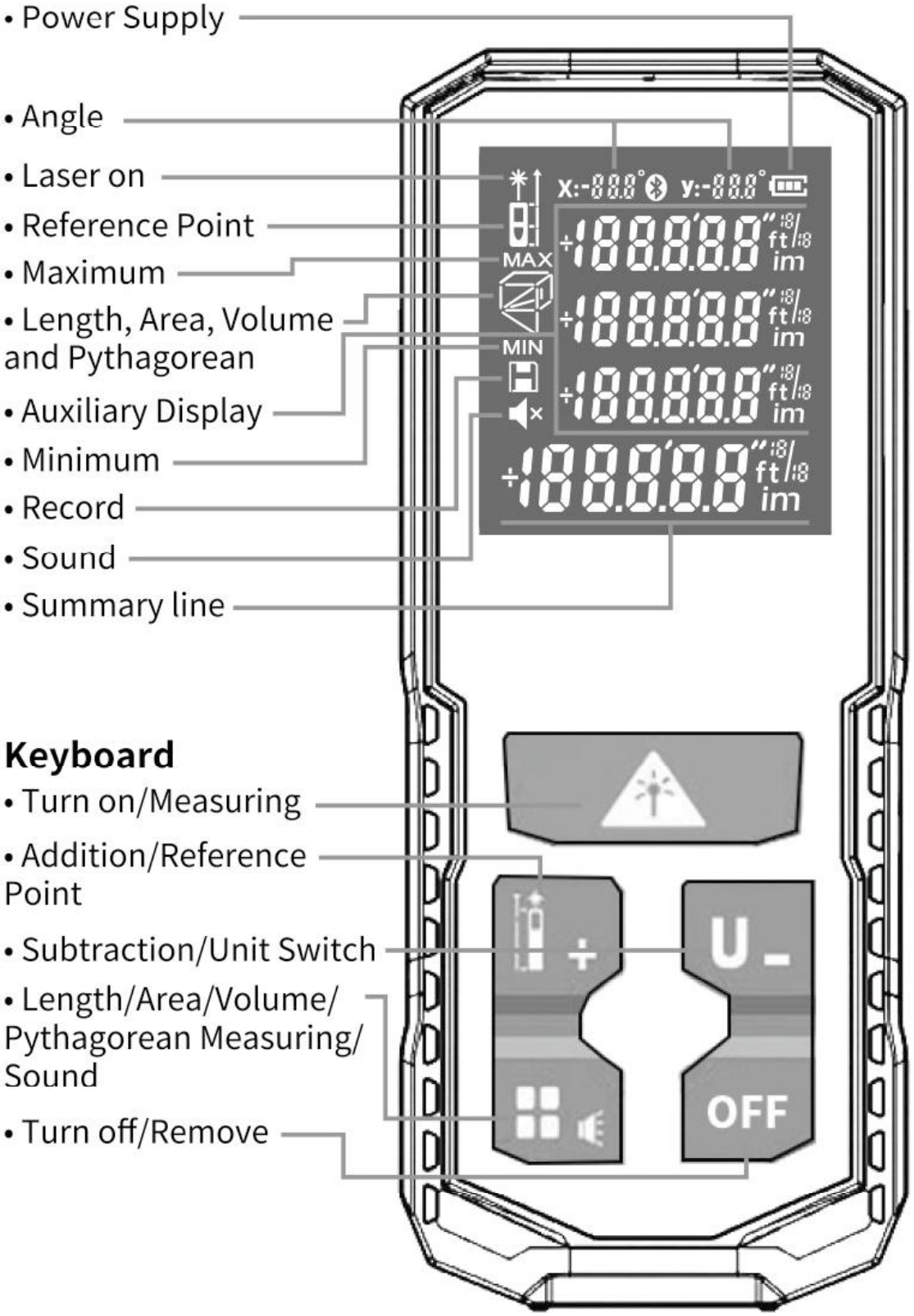

Keyboard

• Turn on/Measuring

• Addition/Reference Point

• Subtraction/Unit Switch

• Length/Area/Volume/ Pythagorean Measuring/ Sound

• Turn off/Remove

Safety Instructions

Laser safety

Before using this product, please read thoroughly and comply with the Safety Instructions. Failure to read and follow may void the warranty. This document must be kept in a safe place and if the laser device is passed on, this document must be passed on with it.

WARNING!
CLASS II LASER PRODUCT
COMPLIES WITH 21 CFR 1040.10 AND 1040.11
Max. Power Output: <1mW
Wavelength: 505-670nm

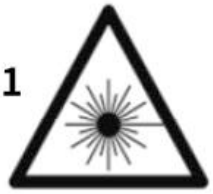

IEC/EN60825-1: 2014

LASER RADIATION:
DO NOT STARE INTO BEAM.
DO NOT DIRECT EYE EXPOSURE.
AVOID VIEW WITH OPTICAL INSTRUMENTS.

ATTENTION:

Read all instructions prior to operating this laser tool. Do not remove any labels from tool.

• Be careful not to expose your eyes to the emitting laser beam (Red light source), while the product is in operation. Exposure to a laser beam for an extended time may be hazardous to your eyes.

• Do not attempt to view the laser beam through optical tools such as telescopes as serious eye injury may result.

• Do not disassemble or modify the laser in any way. Modifying the tool may result in hazardous Laser Radiation Exposure.

• An exposure to the beam of a Class 2 laser is considered safe for a maximum of 2 seconds. Eyelid reflexes will normally provide adequate protection.

• Reflective, specular or shiny surfaces must be covered whilst laser devices are in operation.

• In public areas shield off the laser beam with barriers and partitions wherever possible and identify the laser area with warning signs.

• Do not operate the laser around children or allow children to operate the laser. Serious eye injury may result.

• The following label /print samples are placed on the product to inform of the laser class for your convenience and safety.

• It's prohibited to dispose used batteries together with household waste, please collect used batteries to designated waste station.

• This product must not be recycled with household waste. Dispose of the product appropriately in accordance with the national regulations in your country.

Battery safety

• When use alkaline batteries, please DO NOT charge the device with USB cord. DO NOT mix rechargeable batteries with alkaline batteries at the same time to avoid accidents. Any damage caused by improper use of charging alkaline battery is not covered by the warranty, Huepar will not be responsible for it.

• The device may heat up while charging, which is normal and will not affect the product performance and lifetime. Please unplug the charger and remove the batteries when not in use.

• Please charge it or replace battery if it can’ t be turned on or there is no power indication after starting up. When the device runs out of battery, the battery icon will be displayed and flashing.

• Please use the charging adapter with DC 5V and 1A to charge it, the charging port is the micro USB port. (It is recommended to use a phone charger).

• The battery icon will be displayed in a scrollable way during the charging process.
The battery icon will be displayed and flashing when the charging process is completed.

• When not in use for a long time, please fully charge the device and recharge it once every six months to avoid battery discharge damage.

Battery Installation

1. Press and slide the cover toward the rear of the body to open the battery compartment.

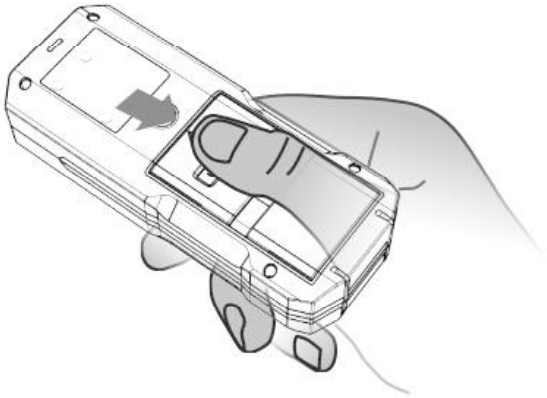

2. Insert 2*AA rechargeable NI-MH batteries, observing correct polarity.
After the battery is placed, press and slide the cover to the top to seal it.

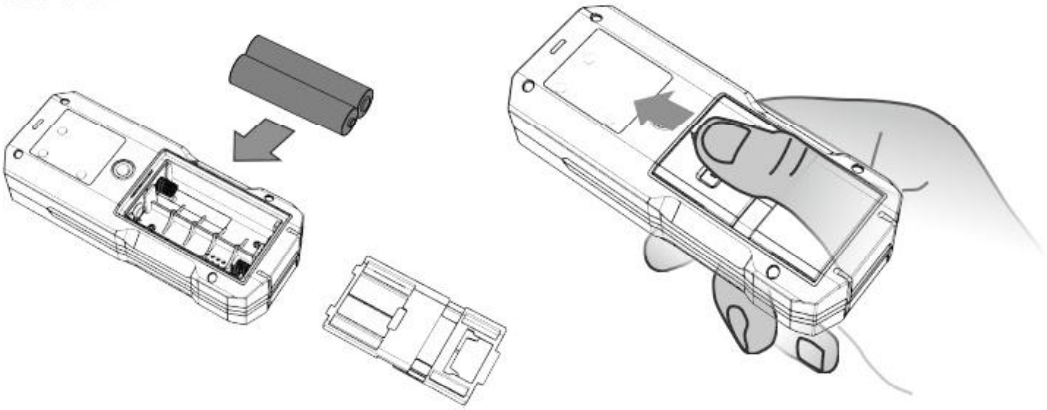

The product adopts rechargeable NI-MH batteries.

Please use provided USB cable while charging. Computer can be used to charge the device, but this takes more time.

Start the Instrument/Menu Setting

1. Turn ON

Short press the button to start the device and the laser stands by for measurement. The screen is shown in the figure A.
The laser can also be shut off without any operation within 30 seconds.

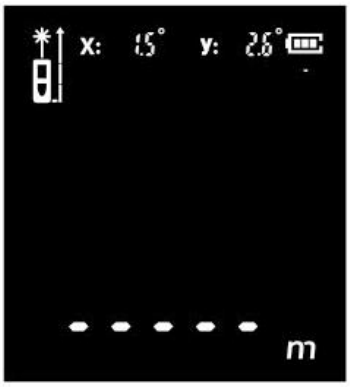

Figure A

2. Turn OFF

Long press OFF for ⩾3 seconds to turn off the device.
The device can also be shut off without any operation within 180 seconds.

3. Changing Reference Point

Long Press [i+] to change the reference point. There are three reference points, the end, the middle and the front. By default, the device reference point is the end.

4. Unit Setting

Long press button [U-] for ⩾2 seconds to enter the measurement unit adjustment state, which can reset the current measurement unit. The default unit is 0.000m. There are 5 units for selection(0.000m/0.000ft/0.000in/0 ⅝ / 0' 0" ⅝).

5. Sound ON/OFF

Long press [⠿] for ⩾3 seconds to turn ON/OFF the buzzer.

When 🔇× appears on the screen and hears "BEE", the buzzer is turned off; when 🔇× disappears and hears "BEE", the buzzer is turned on.

Measurement & Calculation

1. Angle Measurement

The X/Y angle information is displayed on the top of the screen, and the XY angle measurement range is -90.0° to 90.0°. Where the X direction is forward and backward, and the Y direction is left and right.

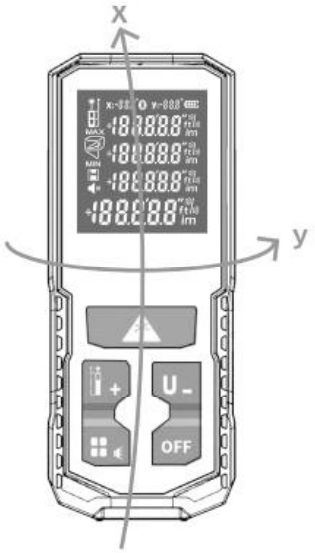

2. Single Distance Measurement:

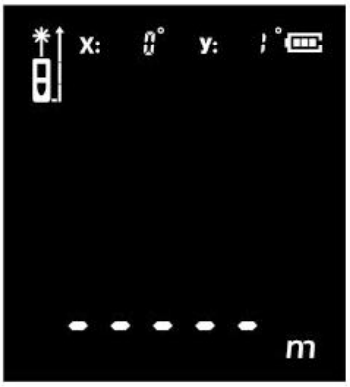

Press the button to enter measurement mode and turn on the laser beam. Press the button again for single measurement of length, then the measured results will be displayed in the summary line.

3. Continuous Measurement:

Long press button for ⩾3 seconds under single distance measuring mode and enter into continuous measuring mode. The maximum and minimum result display in the auxiliary display area, and the present result displays in summary line. Short press the button to stop the measurement and display data. Short press OFF to exit continuous measurement mode.

4. Area Measurement:

Press button to enter into Area Measurement, shows on the left of the screen. One of the side of rectangle blinks on the display, please follow the instructions below for area measuring:

Press once for Length

Press again for Width

The area is calculated and displayed in the summary line.

Press OFF to clear off the result and re-measure if necessary.

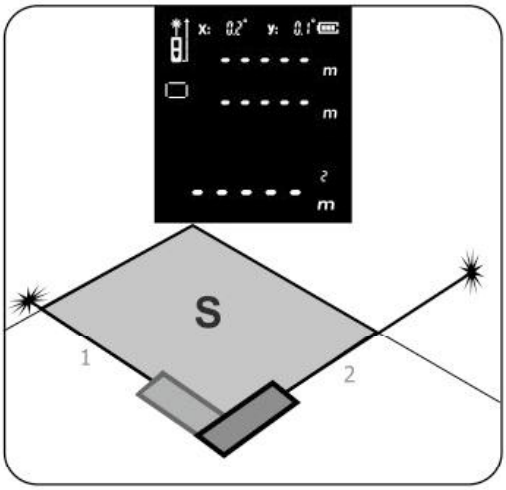

Press OFF until there is no data on the auxiliary display area.

Press OFF again to exit the current mode and return to the length measurement mode.

5. Volume Measurement

Press button twice to enter into Volume Measurement, shows on the left of the screen. One of the side of rectangle blinks on the display, please follow the instruction below for volume measuring:

Press once for Length

Press again for Width

Press thirdly for Height

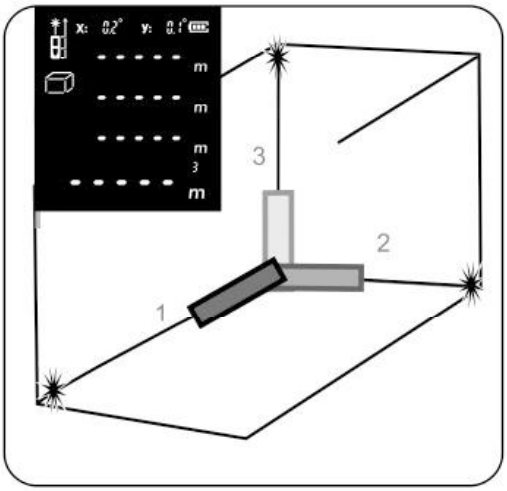

The volume is calculated and displayed in the summary line.

Press OFF to clear off the result and re-measure if necessary.

Press OFF until there is no data on the auxiliary display area. Press OFF again to exit the current mode and return to thelength measurement mode.

6. Indirect Distance Measurement / Pythagoras Measurement

• There are four modes for measuring the unilateral distance of a triangle by using the Pythagorean theorem. It is convenient for users to make indirect measurement in a specific complex environment.

• The indirect distance measurement is used to measure distances that cannot be measured directly because an obstacle would obstruct the laser beam or no target surface is available as a reflector. Correct results are achieved only when the right angles required for the respective measurement are exactly adhered to (Pythagorean Theorem).

• Pay attention that the reference plane of the measurement (e.g. the rear edge of the measuring tool) remains exactly at the same location for all individual measurements within a measuring sequence.

Note:

1. Indirect distance measurement is always less accurate than direct distance measurement. Depending on application, greater measuring errors are possible than with direct distance measurement. To improve the measuring accuracy, we recommend using a tripod.

2. In the Pythagoras Measurement, legs must be shorter than hypotenuse, or there will be "Err" shows on screen. In order to guarantee the accuracy, please make sure all measurements start from the same point.

6.1 Pythagoras (2-point)

Press button three times until Pythagoras (2-point) via shows on the left of the screen. One of the side of rectangle blinks on the display, please follow the instruction below for result measuring:

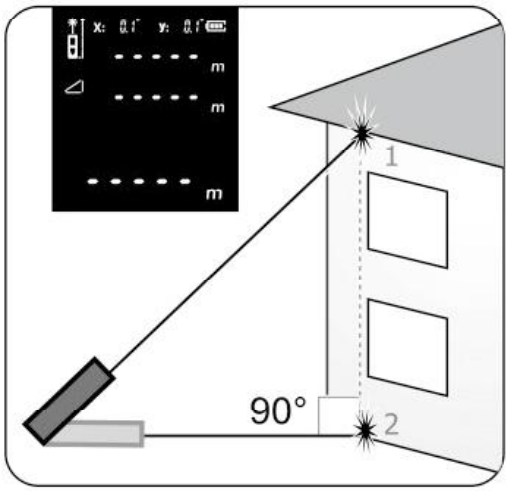

Press to get the distance of 1st line, change to the last direction of the object from the fixed measuring point.

Press again to get the distance of 2nd line.

The result is displayed in the summary line.

6.2 Indirect Length Measurement

Press button four times until indirect Length Measurement shows on the left of the screen and the X Angle is displayed in real time at the top of the screen.One of the side of rectangle blinks on the display, please follow the instruction below for result measuring:

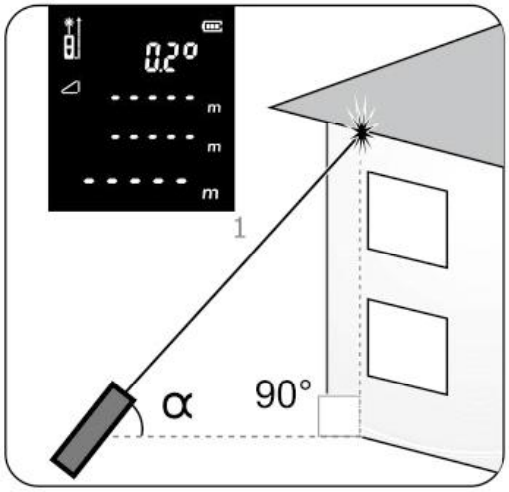

Press to get the X angle and the distance of hypotenuse, vertical and horizontal lines The result will be displayed in line accordingly.

6.3 Pythagoras ①

Press button five times until Pythagoras ① shows on the left of the screen. One of the side of rectangle blinks on the display, please follow the instruction below for result measuring:

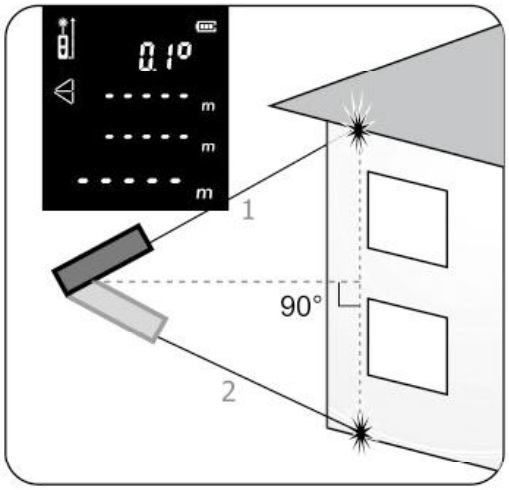

Press to get the distance of 1st line, change to the last direction of the object from the fixed measuring point

Press again to get the distance of last line

The result is displayed in the summary line.

6.4 Pythagoras ②

Press button six times until Pythagoras ② shows on the left of the screen.

Press to get the distance of 1st line, change to the last direction of the object from the fixed measuring point.

Press again to get the distance of last line.

The result is displayed in the summary line.

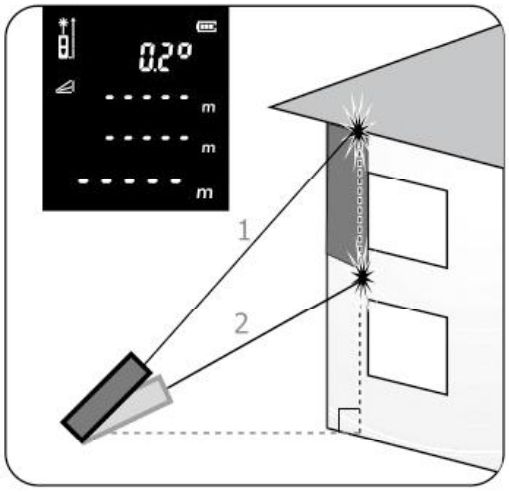

Addition / Subtraction

The device can be used for addition and subtraction.

Press [i+] [U-] to select the function once get the length measuring result.

Short press [i+]([U-]) , "+" ("-") shows on the screen and enter subtraction mode. The previous set of measurement and "+" ("-") will be displayed on the screen.

Displays 0.000 if there is no set of measurement.

Area and volume can also be added and subtracted.

Take the area as an example:

Area addition function:

Step 1: Measure the first area as shown in PIC1.

Step 2: Then press button [i+] , there will be a "+" in the left bottom of screen, measure the second area as shown in PIC2.

Step 3: At last, press button to get the summation result of these two areas datas which shows in PIC3.

PIC1

PIC2

PIC3

Record Function

Storage Function： the storage function will be on once the tool is turned on. Data of each measuring group will be automatically saved to the database, and the maximum is 30 groups.

The data groups will be sequenced from 1 to 30 until it reaches 30 groups.

When the database fully saves 30 groups of data and the 31st data group is obtained by measuring again, the 1st data group will be deleted automatically. Sequences of the remaining data groups will be moved 1 place ahead, and the 31st data group will be stored in the 30th place. Note that changing the battery will not cause the loss of data, and will save the data at the last shutdown.

Open the database: short press until the screen appears to open the database. The latest measuring data will be displayed by default.

Scroll up and down the database: short press to scroll up data; short press U- scroll down data.

Delete data: short press OFF to delete data. The last data group will be deleted.

Working Advice

General Information

The reception lens and the laser beam outlet on the left of the device must not be covered when taking a measurement.

The measuring tool must not be moved while taking a measurement (with exception of the continuous measurement function). Therefore, place the measuring tool, as far as this is possible, against or on a firm stop or supporting surface.

Influence Effects on the Measuring Range

The measuring range depends upon the light conditions and the reflection properties of the target surface. For improved visibility of the laser beam when working outdoors and when the sunlight is intense, shade off the target surface.

Influence Effects on the Measuring Result

Due to physical effects, faulty measurements cannot be excluded when measuring on different surfaces. Included here are:

– Transparent surfaces (e.g., glass, water),
– Reflecting surfaces (e.g., polished metal, glass),
– Porous surfaces (e.g. insulation materials),
– Structured surfaces (e.g., roughcast, natural stone).

Furthermore, faulty measurements are also possible when sighting inclined target surfaces.

Also, air layers with varying temperatures or indirectly received reflections can affect the measured value.

Accuracy Check of the Distance Measurement

The accuracy of the measuring tool can be checked as follows:

– Select a permanently unchangeable measuring section which is approx. 9.8 to 32 ft (3 to 10 m) long and which you know the exact length of (e.g. room width, door opening). The measurement should be performed under favorable conditions, i.e. the measuring section should be indoors with weak backlighting and the target area of the measurement should be smooth and reflect well (e.g. a white-painted wall).

– Measure the distance 10 times in succession.

The deviation of the individual measurements from the average value must not exceed ±0.12 in. (±2 mm) over the entire measuring section in favorable conditions. Record the measurements in order to be able to compare the accuracy at later date.

Working with the Tripod

The use of a tripod is particularly necessary for larger distances. Position the measuring tool with the 1/4" thread onto the tripod with 1/4" mounting screw. Tighten the measuring tool.

Set the corresponding reference level for measurement with a tripod by pushing button . (the reference level is the thread).

Error Code

All errors or failures will be shown as codes.

The following table explains the meaning of codes and solutions.

Code	Cause	Corrective Measure
Err10	Battery too low	Change batteries
Err15	Out of range	Measure target within the range
Err16	Received signal too weak and measuring time too long	Use high reflectivity reflector
Err18	Background brightness too high	Use low reflectivity reflector
Err26	Out of display	Measure target within the range

Specifications

Model	S60	S100	S120
Working Range	0.05~60m (0.16~196ft.)	0.05~100m (0.16~328 ft.)	0.05~120m (0.16~394 ft.)
Distance measurement precision	±(2.0mm+5x10^{-5} xD)* / ±(1/16inch+5x10^{-5} xD)*		
Measurement unit options	m/in/ft/' "		
Laser level	Class 2		
Laser type	Green Beams: 505-530nm,<1mW Red Beams: 630-670nm,<1mW		
Max storage	30 units		
Automatically cut off laser	30s		
Automatic shutdown	180s		
Measuring Reference	Top/Tripod/Rear		
Storage temperature	-10°C~+60°C(+14°F~+140°F)		
Working temperature	0°C~+40°C(+32°F~+104°F)		
Storage humidity	20%-80%RH		
Battery	2xAA NI-MH rechargeable batteries		
Charging parameters	5V-1A		
Angle range	X±90°/Y±90°		
Angular accuracy	±1° (≤30°) ±2° (≤60°) ±3° (≤85°)		
Tripod Mount Size	1/4"-20		
Dimension	121x48x26mm		
Weight with battery	138g		
Degree of protection	IP54 (dust and splash water protected)		

*Measuring Accuracy: ±(2.0mm+5x10^{-5}xD), D is the measured distance, for example, if the measured distance is 10m (10000mm), the measuring accuracy equals ±(2mm+5x10^{-5}x 10000mm)=± 2.5mm

1. Measuring Range

The Maximum range shall be different according to different models. The actual range refers to the package.

2. Measuring Accuracy

If measuring under favorable conditions, such as smooth surface, proper temperature and indoor lighting, the device is able to work within certain range as indicated.

If measuring under unfavorable conditions, such as strong light, uneven surface and improper temperature, the tolerance will be enlarged.

Tips: In case of poor sunlight and bad reflection of the object, please use the target plate or reflector.

Instrument Maintenance

• The device should not be stored in a high temperature and strong humidity environment for a long time; if it is not used very often, please take out the battery and place the device in the allocated potable bag and store in cool and dry place.

• Please keep the device surface cleaning. A wet soft cloth is applied to clean dust, but erosion liquid is never allowed to use for the device maintenance. Laser output window and its focus lens can be maintained according to maintenance procedures for the optical device.

Warranty

The laser tool passed a rigorous and comprehensive product inspection. We are confident in the quality of our products and provide excellent guarantee for professional users of the products.

We offer One Year Warranty from date of purchase including that:

• Proof of purchase is produced
• Service/repairs have not been attempted by unauthorized persons
• The product has not been misused

Defective products will be repaired or replaced, free of charge or at our discretion, if sent together with proof of purchase to our authorized distributor(s)

This Warranty does not cover:

• Faults caused by accidental damage
• The product has suffered unreasonable wear and tear.
• Failure to use according to manufacturers' instructions
• Defects caused by maintenance or renovation without our authorization
• Calibration and maintenance are not included in the warranty.

※ **Note:**

• We are not liable for any direct or indirect loss caused by the failure of this product beyond the scope stipulated by law.

• Repair or replacement under this Warranty does not affect the expiry date of the Warranty.

• This warranty is only applied to customers who have purchased this product, and is not permitted to transfer this warranty to any third parties.

• This Warranty shall not be altered without our authorization.

You can enjoy a 12 months limited warranty but it can be up to 24 months if you register as a member through the product registration. Please scan the QR code to activate your priority.

If you encounter any question or confusion about the product, please feel free to contact us:
support@huepar.com

FR

Vous êtes responsable de remettre tous les appareils électriques et éléctroniques usagés à des points de collecte correspondants.

Pour en savoir plus:
www.quefairedemesdechets.fr

FR

Les piles et batteries se recyclent

A DÉPOSER EN MAGASIN

OU

A DÉPOSER EN DÉCHÈTTERIE

Points de colllecte sur www.quefairedemesdechets.fr

FR

ETUI + TUBE

E-mail: support@huepar.com
Made in China

FCC Warning

This device complies with part 15 of the FCC Rules. Operation is subject to the following two conditions: (1) This device may not cause harmful interference, and (2) this device must accept any interference received, including interference that may cause undesired operation.

Any Changes or modifications not expressly approved by the party responsible for compliance could void the user's authority to operate the equipment.

Note: This equipment has been tested and found to comply with the limits for a Class B digital device, pursuant to part 15 of the FCC Rules. These limits are designed to provide reasonable protection against harmful interference in a residential installation. This equipment generates uses and can radiate radio frequency energy and, if not installed and used in accordance with the instructions, may cause harmful interference to radio communications. However, there is no guarantee that interference will not occur in a particular installation. If this equipment does cause harmful interference to radio or television reception, which can be determined by turning the equipment off and on, the user is encouraged to try to correct the interference by one or more of the following measures:

-Reorient or relocate the receiving antenna.

-Increase the separation between the equipment and receiver.

-Connect the equipment into an outlet on a circuit different from that to which the receiver is connected.

-Consult the dealer or an experienced radio/TV technician for help.

The device has been evaluated to meet general RF exposure requirement. The device can be used in portable exposure condition without restriction.