POWERFUN

PM5

POWER METER SPIDER

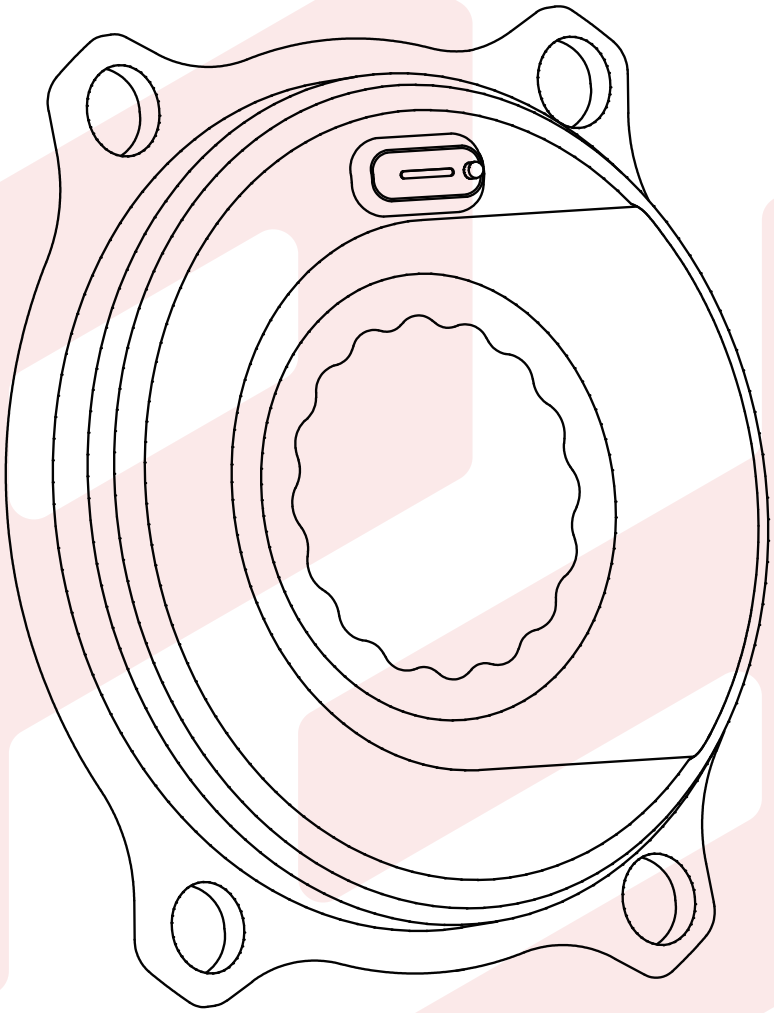

USER MANUAL

*Thank you for choosing this product. To ensure proper use, please carefully read this manual before use and keep it properly for future reference.

1.Product Introduction

This product is specifically designed for road cycling training. Equipped with a high-precision strain gauge and temperature compensation function, it provides stable and accurate real-time power data during daily rides, helping you monitor your riding status, facilitate scientific riding, and optimize training results.

The product supports dual protocol wireless transmission (ANT+ and Bluetooth) and is widely compatible with mainstream bike computers and training applications.

2.Package Contents

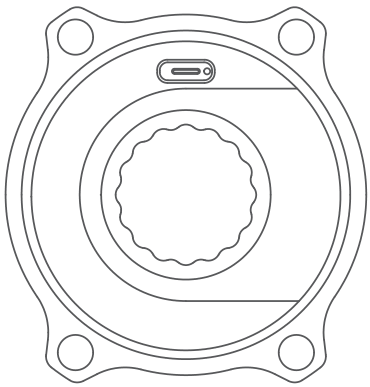

Spider power meter x 1

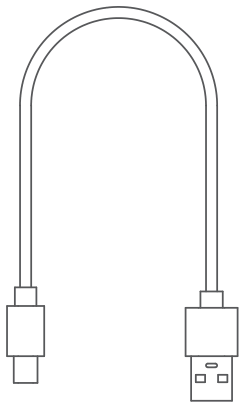

Type-C charging cable x 1

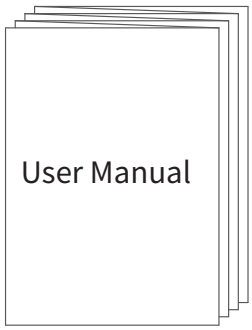

User Manual x 1

3.Installation Requirements

It is recommended that the installation be performed by personnel with experience in installing bicycle drive systems or installation by professional technicians. For the proper operation of the power meter and riding safety, please pay attention to the following matters during installation.

3.1 Refer to Crank Specifications

Before installation, please refer to the crankset's installation instructions to understand its installation method and specified locking torque, and strictly follow the specifications.

3.2 Check for Interference

During installation, please carefully check that the power meter does not rub or bump against the frame, crank, chain, freewheel, or other surrounding components, and that it operates smoothly.

3.3 Installation complete and testing.

After installation, it is recommended to perform a short test ride to check the power meter's operation. If any abnormal noises, readings, or data discrepancies are found, please stop immediately and re-check the installation .

4.Connection pairing

This product supports both ANT+ and Bluetooth dual-protocol wireless transmission.

4.1 Preparation before Pairing

(1) Wake up the device: Turn the crank to ensure the power meter has exited sleep mode; the indicator light will flash.
(2) Enable the wireless function of the receiving device: On your bike computer or mobile phone, enable ANT+ or Bluetooth search function.
(3) Maintain distance: Please perform pairing operations within 3 meters of the power meter.
(4) To avoid interference: If other power meters or sensors are already connected, it is recommended to disconnect them temporarily to avoid signal interference.

4.2 Bike Computer Pairing

(1) Open the bike computer and enter the system menu.
(2) Click "Sensors" and select "Add Sensor".
(3) Turn the crank to activate the power meter.
(4) Find the power meter ID for pairing.
(5) After successful connection, rotate the crank a few times, and the cadence data will appear on the speedometer.

4.3 Connecting applications

(1) Turn on your phone's Bluetooth and open the cycling or training app you are using.
(2) Access the "Device Management," "Add Sensor," or similar function interface within the application.
(3) Turn the crank to activate the power meter.
(4) In the list of available devices, select the power meter ID to connect.
(5) After a successful connection, the indicator light on the power meter will flash blue once.

5.Sleep and Wake-up Mechanism

This power meter features intelligent power management and can automatically enter a low-power state when not in use. It monitors power consumption and quickly resumes operation when you start riding to optimize battery life.

5.1 Wake

When the crank starts to turn (usually after 1 to 2 revolutions), the power meter will immediately wake up and establish a connection. During the wake-up process, the indicator light will flash briefly, and its color represents the current battery level (see section "8. Indicator Light Description" for details) .

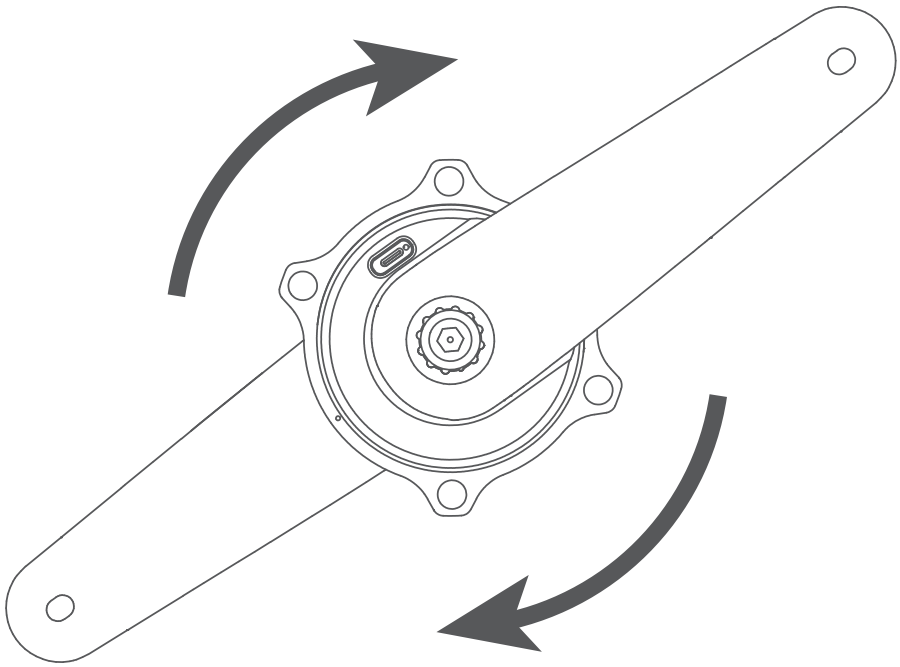

5.2 Hibernation

If the power meter does not detect any movement for 5 consecutive minutes, it will automatically enter sleep mode. During sleep mode, the pairing information between the device and the bike computer or app will be retained and will not be lost.

*Usage Tips: No manual operation of the switch is required during daily riding; the device will automatically manage the power based on your riding status

6.Charge

Remove the waterproof silicone cover and charge using a Type-C charging cable. After charging is complete, be sure to replace the cover and check that it is tightly closed to avoid affecting the waterproof performance of the power meter.

During charging, the indicator light will be solid red; once fully charged, the indicator light will be solid green.

*Usage Tips: The Type-C interface can be used with a standard 5V slow charger or various fast chargers, but it will automatically use the slow charger protocol. If using a power bank or a high-power fast charger, the charging may be automatically disconnected when the battery is almost fully charged and enters trickle charging mode due to low current. In this case, the red light will turn off and the green light will not illuminate.

To read the current power meter charge, you can connect the device to the "POWERFUN Settings" app and read the charge level. However, there may be a delay in reading the charge level while charging.

【Safety Warning】

・Charging Safety

It is recommended to charge the device within an ambient temperature range of -10°C to +45°C. Do not charge the device near open flames, high-temperature heat sources, or in extremely cold or hot environments.

・Strictly Prohibited Modifications

Any form of disassembly, modification, or crushing of this product is strictly prohibited to avoid damaging the battery and circuitry, which could lead to safety hazards. If the battery accidentally comes into contact with water or is submerged, immediately stop using it and dispose of it properly.

・User Safety

Keep this product out of reach of children to prevent accidental damage to the device or personal injury.

7.Equipment Calibration

To maintain the accuracy of power measurement data, manual zero-point calibration is recommended under certain circumstances.

7.1 Recommended Calibration Conditions

(1) After installation: After the first installation or after disassembling and reinstalling the power meter (in this case, you need to step on it several times to release the assembly stress before performing the calibration operation).
(2) When there is a significant temperature change: when the usage environment changes significantly, such as when moving from indoors to outdoors .
(3) Important pre-ride: Before formal training or the start of a race.

7.2 Manual Calibration Steps

Please follow these steps in sequence using the connected "POWERFUN Settings" app or cycling computer:

(1) Enter device connection status and locate the "Sensor Settings", "Power Meter Settings" or similar function interface.
(2) Make sure the bicycle is stationary and that no external force is applied to the pedals or cranks .
(3) Click the "Start Calibration" button.
(4) Wait for the "Calibration successful" message to appear, indicating that the calibration is complete.

*Usage Tips: Please keep the device stable during calibration. If calibration fails, please check for connection interruptions and ensure the bicycle is stationary before trying again.

8.Indicator Light Description

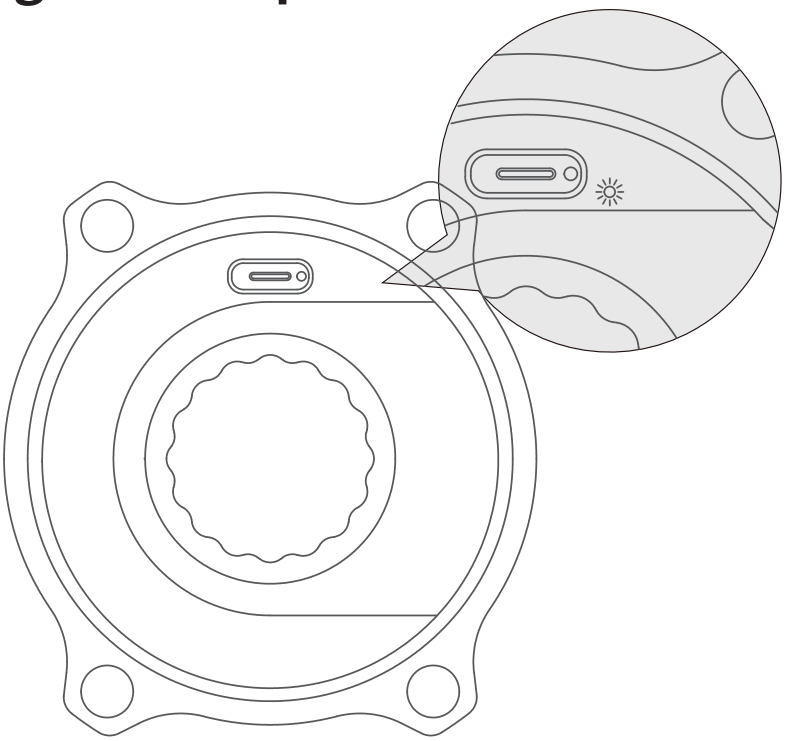

Operate	Indicator light status
Bluetooth Pairing	When Bluetooth is successfully connected, the blue light flashes once; when Bluetooth is disconnected, the red light flashes once.
Wake-up	After waking up the power meter, if the battery level is above 20%,The green light flashes three times; if the battery level is below 20%, the red light flashes five times.
Charging	The red light stays on while charging; the green light stays on when the battery is fully charged. (Charging in progress, other status lights are not working)
Firmware Upgrade	During the upgrade process, the blue light will remain on. It will automatically turn off and restart after the upgrade is complete.

9.Specifications

Power Accuracy	±1%
Weight	108g
Battery Life	300h
Battery	Rechargeable lithium battery
Radio Protocol	ANT+, Bluetooth
Waterproof	IPX7
Operating Temperature	-20°C-60°C
Storage Temperature	-30°C-60°C
Power Range	0-2800W
Cadence Range	20-240RPM
Measurement Data	Power, cadence, left-right balance, pedaling smoothness

10.Cleaning and Maintenance

10.1 Daily Cleaning

- Wipe the surface of the device with a soft, microfiber cloth to remove dust, dirt, or sweat.
- The equipment is designed to withstand everyday rain, but do not immerse it in water during cleaning, and avoid using a high-pressure water gun to rinse it directly.

10.2 Protective Inspection

- Avoid subjecting the power meter and crank assembly to strong impacts or vibrations to prevent damage to internal sensing elements.
- Regularly check whether the screws securing the power meter to the crank and chainring are loose. It is recommended to check once a month or after every 500 kilometers of riding.

10.3 Performance Maintenance

- To maintain data accuracy, it is recommended to perform a zero-point calibration once a week or before each long-distance ride (see “7. Equipment Calibration” section for details).
- Regularly check for firmware updates via the "POWERFUN Settings" app and upgrade promptly to achieve feature optimizations and performance improvements.

10.4 Long-term Storage

- Store in a dry, cool environment.
- Charge the battery every 6 months to maintain battery health.

10.5 Prohibited Items

- It is strictly forbidden to disassemble, modify or attempt to repair this product yourself.
- Avoid contact with corrosive chemical solvents.

The official POWERFUN app "POWERFUN Settings":

1.Download from the official website:

https://www.powerfun.com/DownloadView1

2.Scan the QR code to download:

Nantong POWERFUN Technology Co., Ltd.

Building 13, Sino-Singapore Intelligent Manufacturing Industrial Park, No. 6 Haibao Road,
Suxitong Science and Technology Industrial Park, Nantong City, Jiangsu Province

www.powerfun.com

FCC Statement

This device complies with part 15 of the FCC Rules. Operation is subject to the following two conditions: (1) This device may not cause harmful interference, and (2) this device must accept any interference received, including interference that may cause undesired operation. This equipment has been tested and found to comply with the limits for a Class B digital device, pursuant to part 15 of the FCC Rules. These limits are designed to provide reasonable protection against harmful interference in a residential installation. This equipment generates, uses and can radiate radio frequency energy and, if not installed and used in accordance with the instructions, may cause harmful interference to radio communications. However, there is no guarantee that interference will not occur in a particular installation. If this equipment does cause harmful interference to radio or television reception, which can be determined by turning the equipment off and on, the user is encouraged to try to correct the interference by one or more of the following measures:

•Reorient or relocate the receiving antenna.
•Increase the separation between the equipment and receiver.
•Connect the equipment into an outlet on a circuit different from that to which the receiver is connected.
•Consult the dealer or an experienced radio/TV technician for help.

Caution: Any changes or modifications to this device not explicitly approved by manufacturer could void your authority to operate this equipment.

RF Exposure Information

The device has been evaluated to meet general RF exposure requirement. The device can be used in portable exposure condition without restriction.