Sveaverken

F200 Max Auto Steer System

Hardware Installation Manual

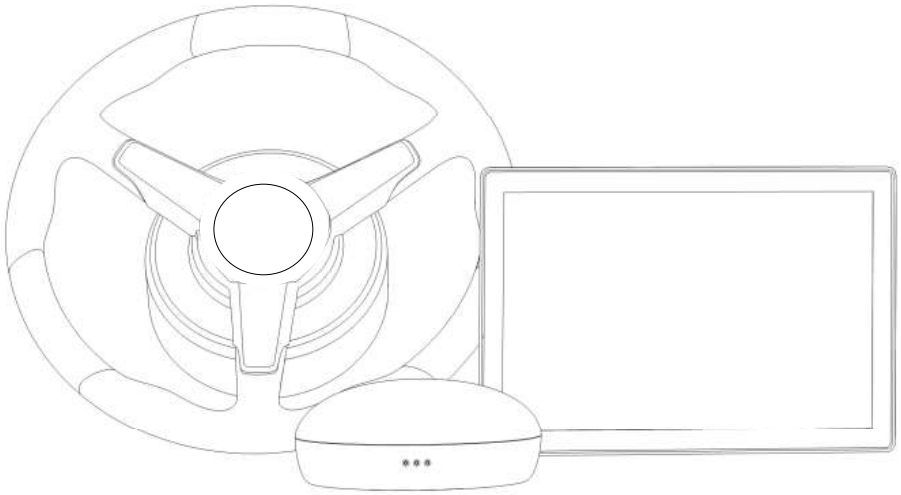

© Sveaverken All rights reserved.

Copyright Notice:

Sveaverken reserves the copyright for this manual and all contents herein. No part of this manual may be reproduced, extracted, reused, and/or reprinted in any form or by any means without the prior written permission of Sveaverken.

This manual is subject to change without notice.

Read Before Installation:

	Follow this manual for installation. Improper installation may cause machine damage and poor performance. If you have any questions during installation, contact our customer service.

© Sveaverken All rights reserved.

Disclaimer

- The purchased products, services, and features are stipulated by the contract. All or part of the products, services, and features described in this manual may not be within the scope of your purchase or usage. Unless otherwise specified in the contract, all the content in this manual is provided "AS IS" without warranties of any kind, express or implied.
- The content of this manual is subject to change due to product upgrades and other reasons. Sveaverken Software Development (Shanghai) Co., Ltd (Sveaverken) reserves the right to modify the content of this manual without notice.
- This manual only provides guidance for use of this product. Every effort has been made in the preparation of this manual to ensure accuracy of the content, but no information in this manual constitutes a warranty of any kind, express or implied.

© Sveaverken All rights reserved.

Preface

Thank you for purchasing Sveaverken product. This manual provides detailed hardware installation guide. If you have any questions, contact the local dealer.

Purpose and Intended Users

This manual introduces the physical characteristics, installation procedures, and technical specifications of the product as well as the specifications and use of the wiring harnesses and connectors.

Based on the assumption that the users are familiar with the terms and concepts related to this product, this manual is intended for users who have read the preceding content and have experience in hardware installation and maintenance.

Technical Support

Sveaverken official website: www.sveaverken.com

© Sveaverken All rights reserved.

Contents

1 Product Introduction 1
2 Preparation Before Installation 2
2.1 Safety Instructions 2
2.1.1 Installation 2
2.1.2 Disassembly 2
2.1.3 Electrical Operations 2
2.2 Installation Requirements 2
2.2.1 Installation Position 3
2.2.2 Temperature and Humidity 3
2.2.3 Air 3
2.2.4 Power Supply 3
2.3 Installation Tools 3
2.4 Unpacking and Inspection 4
3 Inspection 7
3.1 Inspection Before Installation 7
3.2 Precautions 7
4 Installation 8
4.1 Installing the Electric Steering Wheel 8
4.1.1 Components 8
4.1.2 Installation Steps 8
4.2 Installing the GNSS Receiver 8
4.2.1 Components 8
4.2.2 Installation Steps 8
4.3 Installing the Angle Sensor 10
4.3.1 Components 14
4.3.2 Installation Steps 15
4.4 Installing the Radio Antenna 16
4.4.1 Components 16
4.4.2 Installation Steps 17

© Sveaverken All rights reserved.

4.5 Installing the Control Terminal 17
4.5.1 Components 17
4.5.2 Installation Steps 18
4.6 Installing the SIM Card 14
4.6.1 Components 14
4.6.2 Installation Steps 14
4.7 Installing Wiring Harness 15
4.7.1 Components 15
4.7.2 Installation Steps 16
5 System Commissioning 18
5.1 Site Requirements 18
5.2 Power-on 18
5.2.1 Inspection Before Power-on 18
5.2.2 Inspection After Power-on 18
5.3 Parameter Calibration 18
6 Appendix 19
6.1 Specifications 19

© Sveaverken All rights reserved.

1 Product Introduction

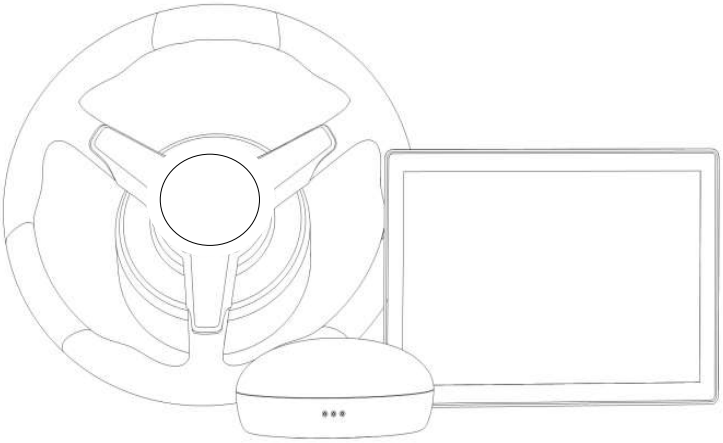

2

Sveaverken F200 Max Auto Steer System is an autosteering system that is launched by Sveaverken for agricultural machinery and supports assisted straight line driving. The system consists of the control terminal, GNSS receiver, electric steering wheel,and wiring harnesses. The control terminal runs the software developed by Sveaverken.

© Sveaverken All rights reserved.

3 Preparation Before Installation

3.1 Safety Instructions

Before installation, read the safety advice in this manual carefully to avoid doing harm to people and equipment.

Note that the following safety advice cannot cover all possible dangerous situations.

3.1.1 Installation

- Do not install and commission the equipment in environments with high temperature, heavy dust, harmful gases, flammables, explosives, electromagnetic interference (for example, around large radar stations, transmitting stations, and substations), unstable voltages, great vibration, and strong noise.
- Do not install the equipment in places where water is likely to accumulate, seep, drip, and condense; otherwise, the equipment ports could be damaged.

3.1.2 Disassembly

- To avoid accidental damage, do not frequently disassemble the equipment after installation.
- Before disassembly, turn off all power supplies and disconnect the cable from the battery to prevent equipment damage.

3.1.3 Electrical Operations

- Electrical operations must be performed by qualified personnel in accordance with local laws and regulations.
- Carefully check the working area for potential hazards, such as wet ground.
- Before installation, learn about the position of the emergency stop button. Use this button to cut off the power supply in case of accidents.
- Do not put the equipment in a humid place. Prevent the liquids from entering the equipment.
- Stay away from radio transmitting stations, radar stations, high-frequency and large-current equipment, and other high-power radio equipment.
- Direct or indirect contact with high voltage or utility power may cause death.

3.2 Installation Requirements

To ensure the normal operation of the equipment, the installation site must meet the following requirements.

© Sveaverken All rights reserved.

2.2.1 Installation Position

- Ensure that the installation position is firm enough to support the equipment and its accessories.
- Ensure that there is enough space to install the equipment at the installation position, without any obstruction or obstacle.

2.2.2 Temperature and Humidity

- The temperature and humidity of the working environment should be kept within a reasonable range to ensure the normal operation and service life of the equipment. Avoid high temperature and humidity. In summer, protect the control terminal from direct sunlight, and note that appropriate space must be maintained between the shelter and the control terminal.
- The equipment will be damaged if it works under improper environmental temperature and humidity.
- When the relative humidity is too high, insulating materials may not perform well, causing leakage currents. Mechanical property changes, rusting, and corrosion may also occur.
- When the relative humidity is too low, insulating materials will dry and contract, and static electricity may occur and damage the electric circuits of the equipment.

2.2.3 Air

- Ensure that the contents of salt, acid, and sulfide in the air are within a reasonable range. Some hazardous substances will accelerate the rusting and corrosion of metals and the aging of parts. Keep the working environment free of harmful gases (for example, sulfur dioxide, hydrogen sulfide, nitrogen dioxide, and chlorine).

2.2.4 Power Supply

- Input voltage: The system supports the input voltage of 9-36 V.
- Ensure that the power line is connected properly to the positive and negative terminals of the battery. Keep wiring harnesses away from hot objects.

3.3 Installation Tools

Prepare the following tools before installation.

Installation Tools for Sveaverken F200 Max Auto Steer System				
No.	Tool	Specifications	Qty.	Function
1	Open-end wrench	8	1	Install the antenna bracket

© Sveaverken All rights reserved.

				assemblies on top of the machine.
2		11	1	Fix the U-bolts of the control terminal.
3		13	2	Install antenna bracket assemblies.
4		12/14	2	Install the battery cables (bolt size depends on the machine model) and motor bracket.
5		18/21	1	Disassemble and install the front axle shaft cover bolts (bolt size depends on the machine model).
6	Sleeve	8	1	Install the antenna bracket assemblies on top of the machine.
7		24/27	1	Install the GNSS receiver and antenna bracket assembly. Disassemble and install the lock nut of the original steering wheel.
8	Electric drill	/	1	Work with sleeves.
9	Tweezers	/	1	Install the SIM card.
10	Ejector pin	/	1	Install the SIM card.
11	Box cutter	/	1	Unpack.
12	Scissors	/	1	Cut cable ties.
13	Tape measure	5 m	1	Measure vehicle parameters.
14	Open-end wrench	9/10	1	Spare part.
15	Extra-long box-end wrench	11/13/14	1	Spare part.

3.4 Unpacking and Inspection

Unpack and check the items according to the following list.

1	Electric steering wheel	Steering wheel		1	
2		Steering motor		1	12 V/24 V
3		Small self-	Hexagon socket	6	Install splined

© Sveaverken All rights reserved.

		sealing bag	head cap screw M4×14		sleeves.
4			Spring washer M4	6	
5			Plain washer M4	6	
6	Control terminal	Control terminal		1	
7		Control terminal bracket		1	Fix the control terminal.
8		Control terminal mounting base		1	
9		Nut		4	
10		U-bolt		2	
11	GNSS receiver	GNSS receiver		1	
12		Antenna bracket assembly		1	
13		Antenna bracket assembly II		2	
14		3M sticker		2	
15		Small self-sealing bag 2	Self drilling screw	4	
16	Nameplate bracket	Nameplate bracket		1	With the nameplate mounted.
17		Small self-sealing bag	Hexagon socket head cap screw M6×16	2	Fix the nameplate bracket.
18			Spring washer M6	2	
19			Plain washer M6	2	
20	Wiring harnesses	Main power cable		1	
21		GNSS receiver wiring harness		1	
22		Main wiring harness		1	
23		Spare main wiring harness		1	
24		Angle sensor assembly		1	
25		Radio antenna	Sucker base	1	
26			Radio antenna	1	
27			3M sticker	1	Fix the radio antenna.

© Sveaverken All rights reserved.

28	Others	Large self-sealing bag	Packing list	1	
29			Software user manual	1	
30			Certification	1	
31			Nylon cable tie	20	

!	**Note:** The splined sleeves, motor bracket, and angle sensor bracket are not included in the list and will be provided by the dealer separately. The dealer will be responsible for the installation of such parts based on your machine model.

Above is the general shipping configuration. The actual shipment is subject to the contract and may differ slightly. Check the items in the package according to the packing list or the contract. If there is any doubt or discrepancy, contact your dealer.

© Sveaverken All rights reserved.

4 Inspection

Read Chapter 2 carefully, and ensure all requirements specified in this chapter are met before installation.

4.1 Inspection Before Installation

Before installation, make a detailed plan and arrangement regarding the installation position, power supply, and wiring of the equipment, and ensure that:

- There is sufficient space to facilitate equipment installation and heat dissipation.
- The environmental temperature and humidity meet the requirements.
- The power supply and wiring meet the requirements.
- The selected power supply matches the system power.
- For a user-specific equipment, ensure that the specific requirements are met.

4.2 Precautions

- Cut off the power supply when installing the equipment.
- Place the equipment in a dry environment.
- Do not place the equipment in a high-temperature environment.
- Keep the equipment away from high-voltage cables.
- Keep the equipment away from strong thunderstorms and electric fields.
- Unplug the power supply before cleaning.
- Do not clean the equipment with liquids.
- Do not open the equipment enclosure.
- Fix the equipment firmly.

© Sveaverken All rights reserved.

5 Installation

5.1 Installing the Electric Steering Wheel

5.1.1 Components

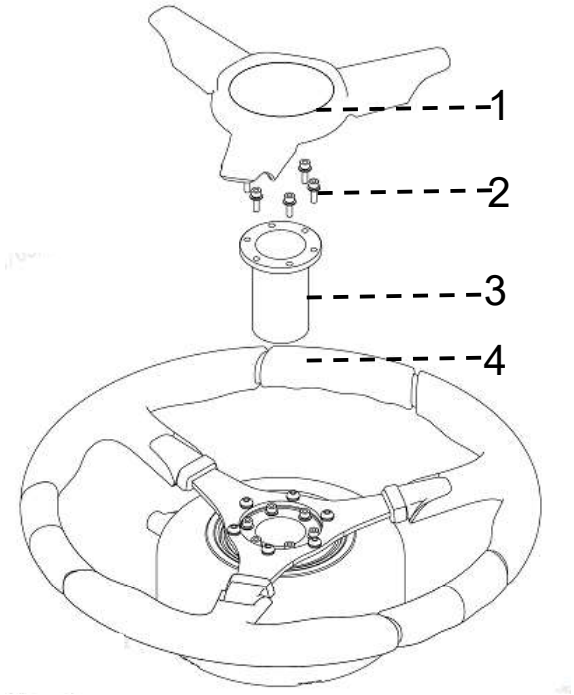

Electric Steering Wheel Assembly			
No.	Name	Qty.	Remarks
1	Dust cap	1	
2	Hexagon socket head cap screw M4×14	6	
3	Splined sleeve	1	Packed in the accessory box and selected according to the machine model.
4	Electric steering wheel	1	

© Sveaverken All rights reserved.

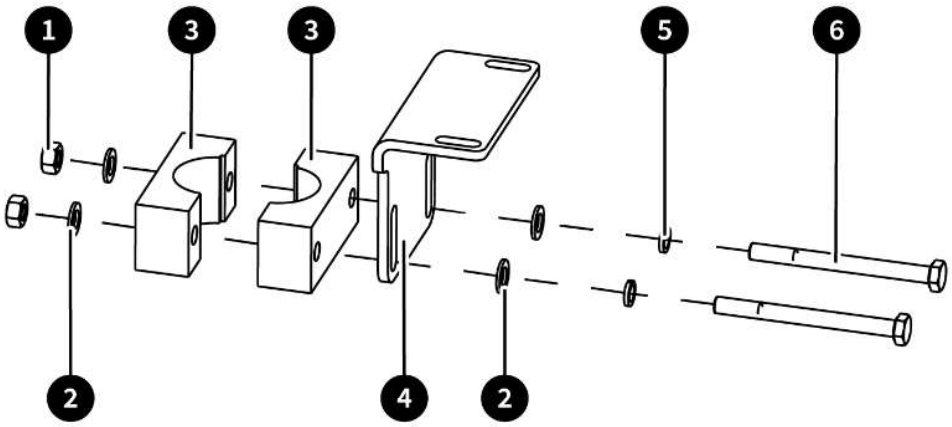

2# Motor Bracket (Component 7 of the Electric Steering Wheel Assembly)			
No.	Name	Qty.	Remarks
1	Hexagon nut M8	2	
2	Plain washer M8	4	
3	Steering column hoop	2	
4	Steering motor mounting bracket	1	
5	Spring washer M8	2	
6	Hexagon bolt M8×80	2	

5.1.2 Installation Steps

1. Remove the dusk cap ❶ of the original steering wheel on the machine, unscrew the lock nut ❷ (keep the nut for later use), and pull out the original steering wheel ❸.

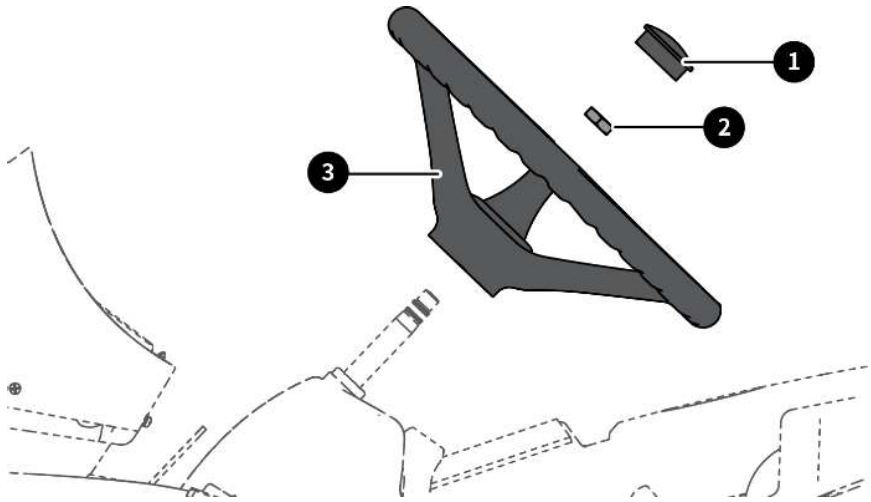

2. Install the splined sleeve ❶ on the steering column ❷, and check whether the splined sleeve is appropriate by rotating it to see whether there are any sways or gaps. As the steering column on the machine varies, you may try several splined sleeves to select the one that fits.

© Sveaverken All rights reserved.

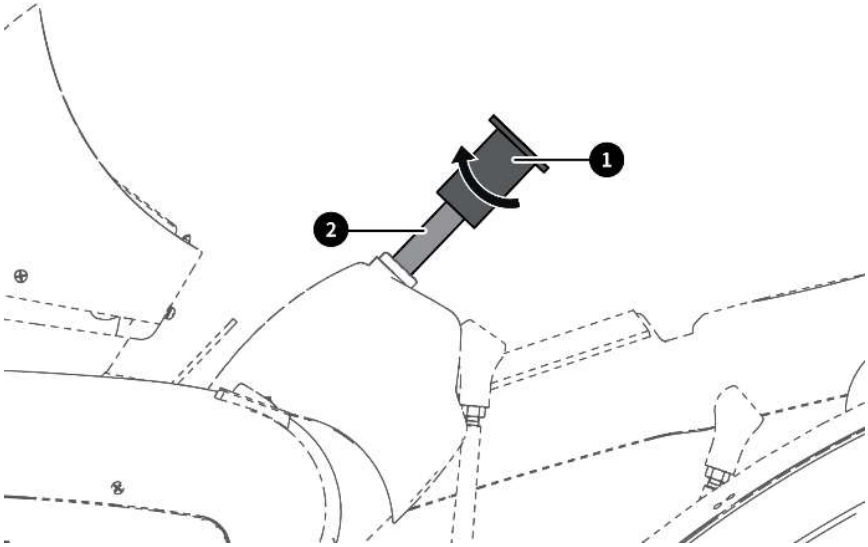

3. Use bolts (M4x14) to mount the splined sleeve on the motor.

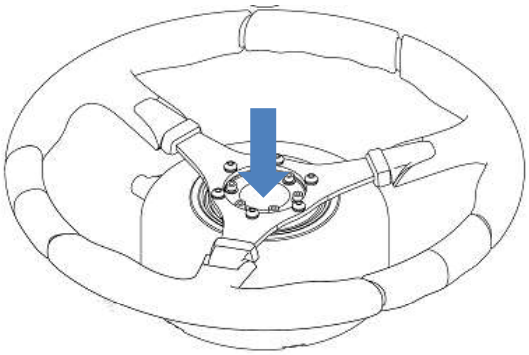

4. Fix the steering motor ❺ and motor bracket ❹ with two M6×16 hexagon socket head cap screws ❶, two M6 spring washers ❷, and two M6 plain washers ❸. Do not fully torque the screws at this time.

!	**Note:** As the dashboard under the steering wheel varies, select an appropriate motor bracket according to the specific machine used. The 2# motor bracket is only shown and illustrated as an example.

© Sveaverken All rights reserved.

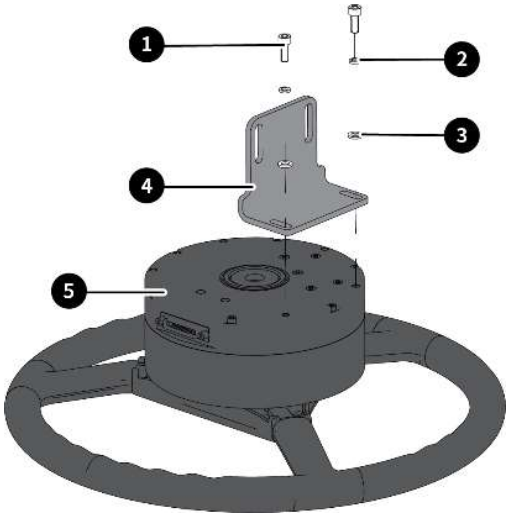

5. Install the electric steering wheel ❶ on the machine, and adjust the position of the motor port ❷ to facilitate the wiring harness connection (it is recommended to adjust it to the position convenient for connection with the control terminal). Install the steering column hoop ❸, adjust the position of the motor bracket ❹, and tighten it with two M8×80 hexagon bolts ❺, two M8 spring washers ❻, two M8 plain washers ❼, and two M8 hexagon nuts ❽ to ensure that the motor bracket is firmly installed and the outer ring does not rotate with the bracket.

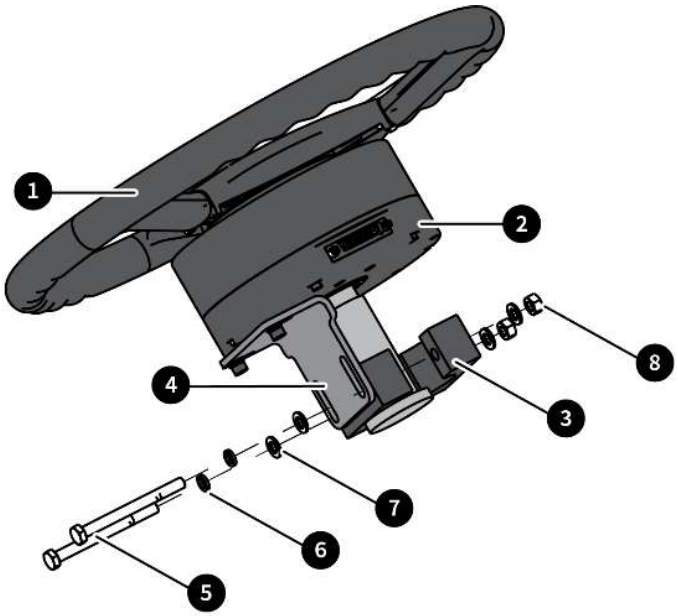

6. Install the lock nut on the splined sleeve and install the dust cap

© Sveaverken All rights reserved.

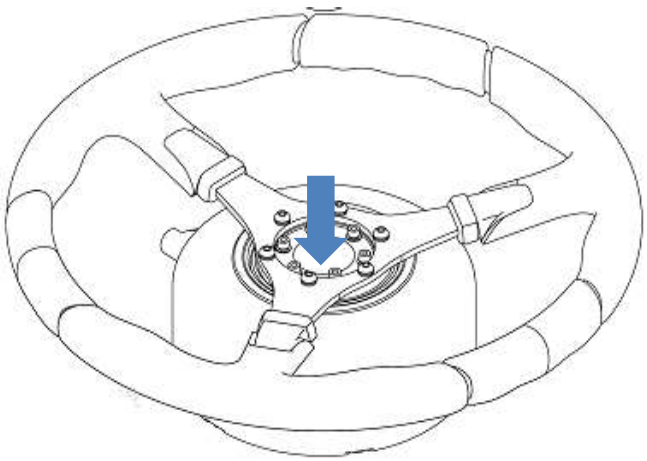

5.2 Installing the GNSS Receiver

5.2.1 Components

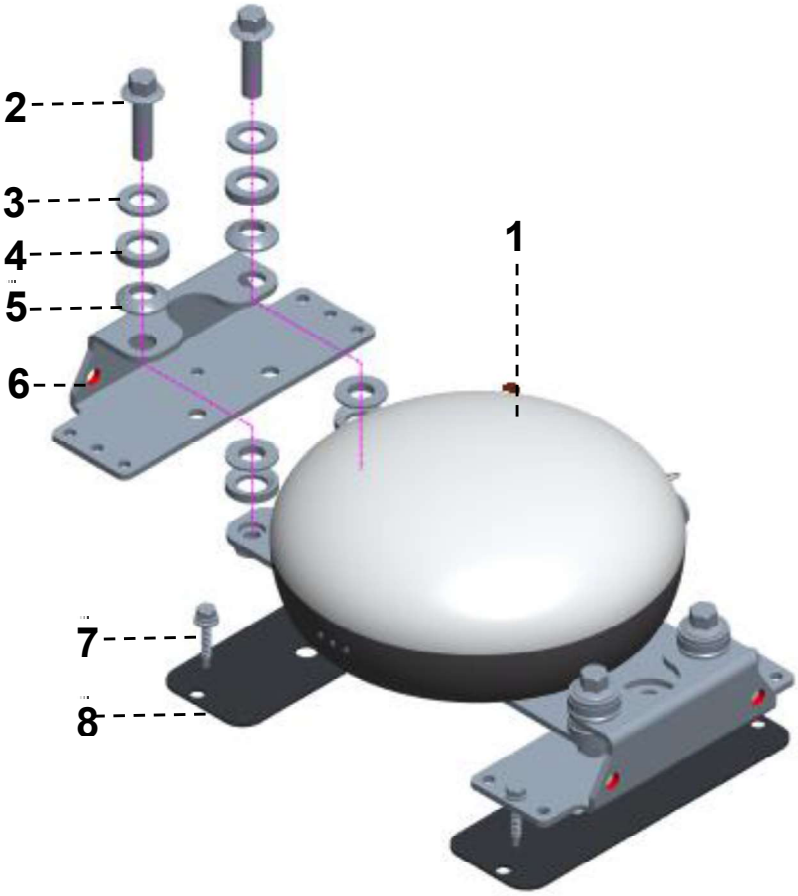

No.	Name	Qty.	Remarks
1	GNSS receiver	1	
2	Hexagon flange bolt M8×30	4	
3	Flat washer class A M8	4	

© Sveaverken All rights reserved.

4	Spherical washer	8	
5	Taper washer	8	
6	GNSS receiver bracket	2	
7	Tapping screw	4	
8	3M sticker	4	

5.2.2 Installation Steps

Install the GNSS receiver bracket on the top of the agricultural machinery with the flat washers, spherical washers, taper washers, and tapping screws or 3M stickers. The installation method is as follows:

Step 1: The GNSS receiver is pre-installed on the bracket. Tighten the hexagon flange bolts . Use an appropriate number of washers on both sides to ensure that the GNSS receiver is level.

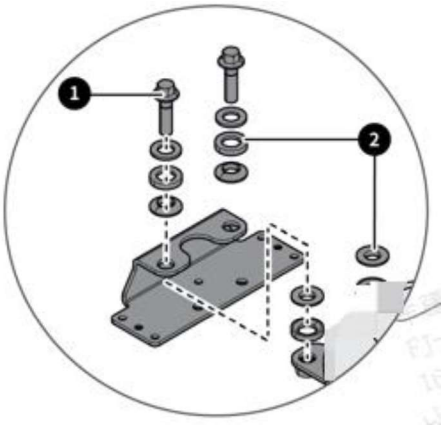

Step 2: Use the tapping screws or 3M stickers, whichever suitable, to fix the GNSS receiver on the top.

Method 1: Use tapping screws ❶ to fix the GNSS receiver bracket ❷ on the top of the agricultural machinery.

© Sveaverken All rights reserved.

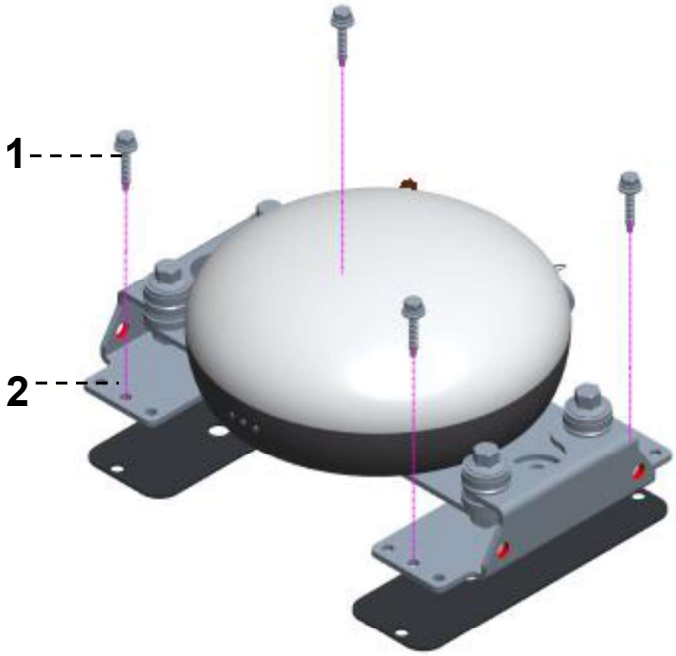

Method 2: Use the 3M stickers ❷ to fix the GNSS receiver bracket ❶.

5.3 Installing the Angle Sensor

5.3.1 Components

© Sveaverken All rights reserved.

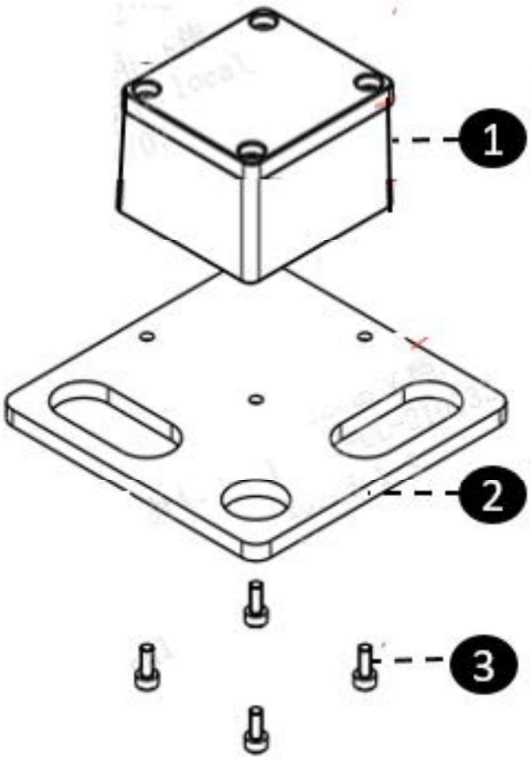

No.	Name	Qty.	Remarks
1	Angle sensor	1	
2	Angle sensor bracket	1	
3	Assembly bolt M3×8	4	

5.3.2 Installation Steps

1. Remove the front axle shaft cover bolts ❶.

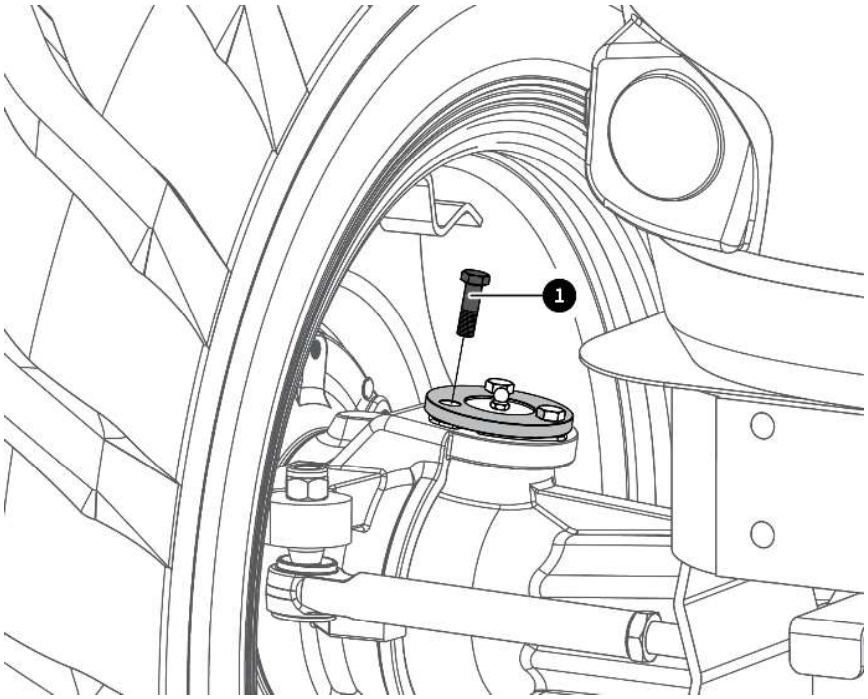

© Sveaverken All rights reserved.

2. Install the angle sensor ❶ on the front axle, adjust the wiring harness, and install and tighten the bolt removed in step 1.

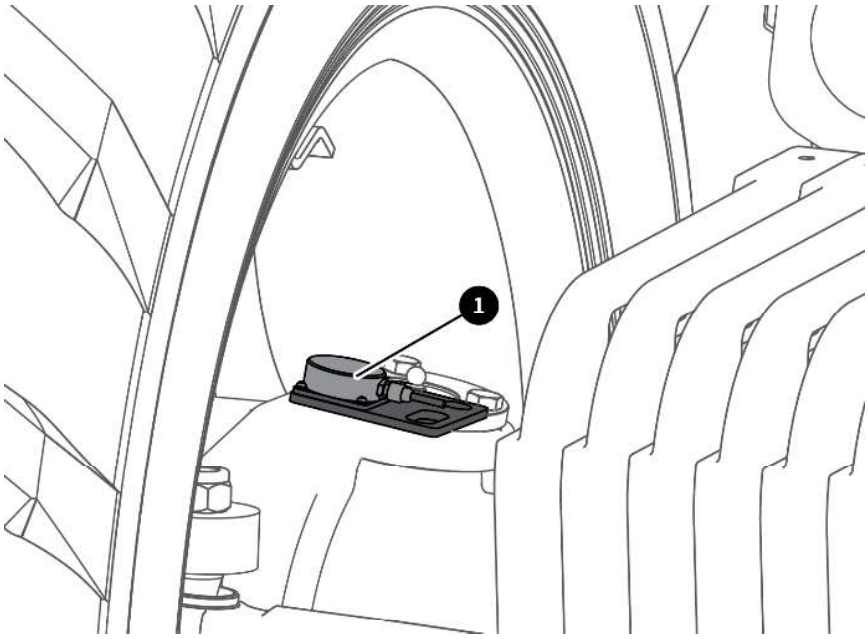

5.4 Installing the Radio Antenna

5.4.1 Components

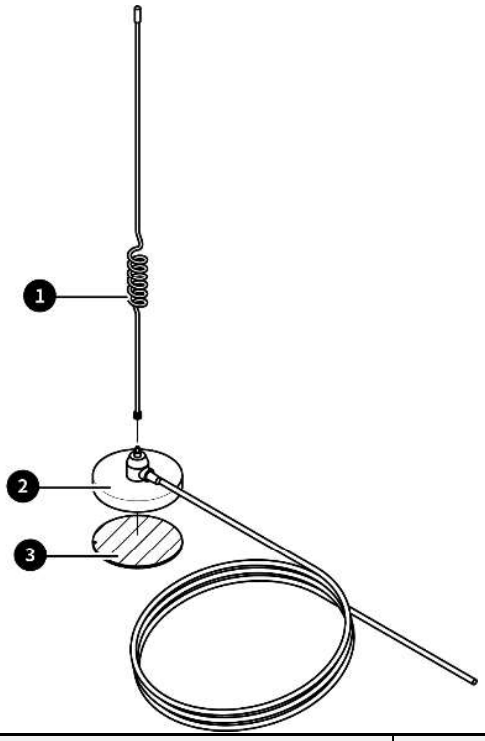

No.	Name	Qty.	Remarks
1	Radio antenna	1	
2	Sucker base	1	
3	3M sticker	1	

© Sveaverken All rights reserved.

5.4.2 Installation Steps

- If there is no suitable metal plane on top of the machine, select and clean a suitable plane to install the antenna. Attach the 3M sticker on the sucker base of the radio antenna, and attach the antenna to the selected position.

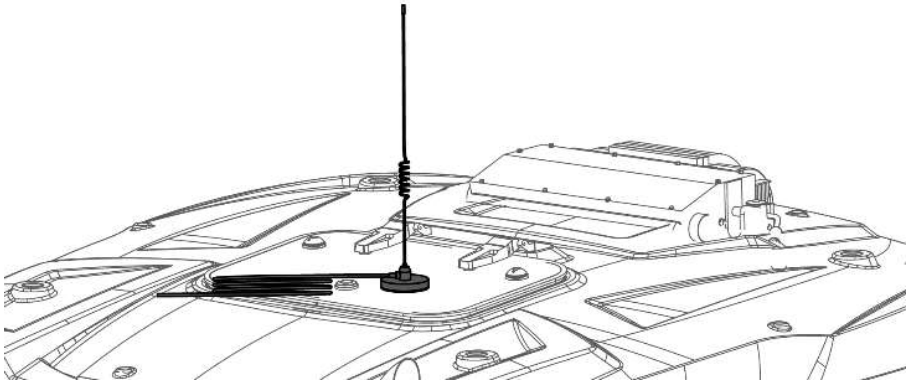

- If there is a suitable metal plane on top of the machine, wipe the plane clean, and then directly suck the radio antenna to the plane.

5.5 Installing the Control Terminal

5.5.1 Components

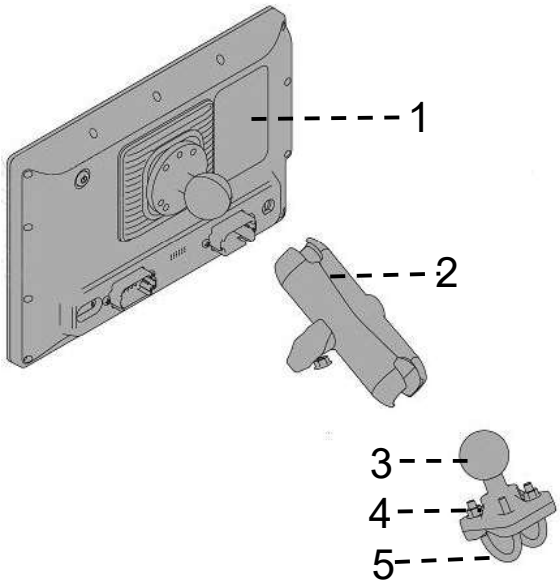

No.	Name	Qty.	Remarks
1	Control terminal	1	
2	Control terminal bracket	1	
3	Control terminal mounting base	1	Provided together with the

© Sveaverken All rights reserved.

No.	Name	Qty.	Remarks
4	Nut	4	control terminal bracket.
5	U-bolt	2	

5.5.2 Installation Steps

1. Fix the control terminal mounting base ❸ with two U-bolts ❶ and four nuts ❷ at an appropriate position of the door armrest on the lap bar side of the cab.

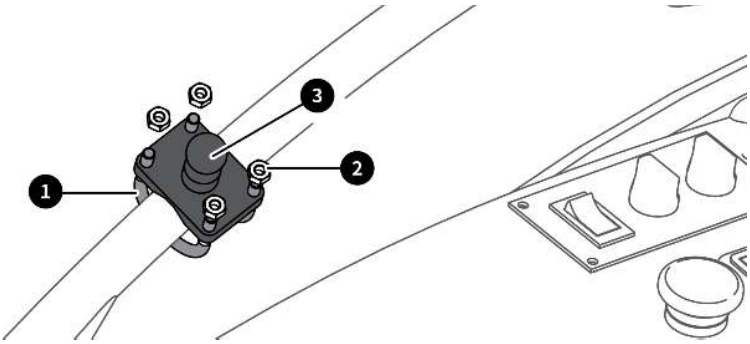

2. Turn anticlockwise the hand screw ❶ to loosen it, and place the ball joint ❷ of the control terminal into the socket ❸ of the control terminal bracket.

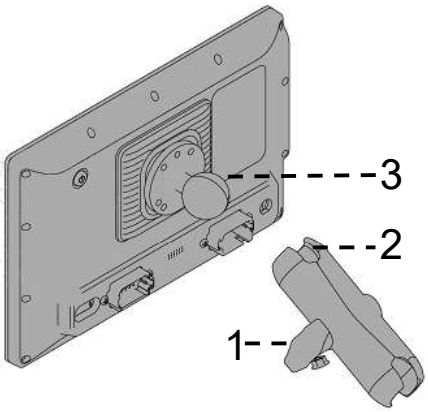

3. Place the socket of the control terminal bracket ❶ on the ball joint ❷ of the control terminal mounting base in the same way as in step 2, and turn the hand screw ❸ clockwise to fix the control terminal.

© Sveaverken All rights reserved.

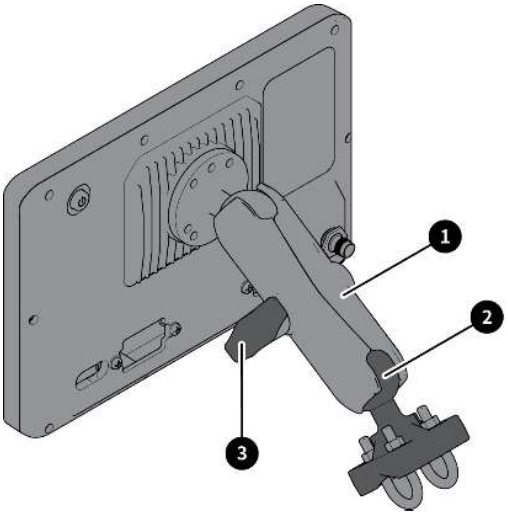

5.6 Installing the SIM Card

5.6.1 Components

No.	Name	Qty.	Remarks
1	SIM card	1	Micro-SIM

Notes:

1. Purchase a SIM card that supports the frequency bands of the 4G communication module of the control terminal.
2. Ensure that the SIM card supports the following 4G frequency bands:

LTE B2/4/5/7/12/13/25/26/38/41

WCDMA B2/4/5

GSM850/GSM1900

3. Ensure that you have data service with your SIM card.
4. After installing the SIM card, turn on the control terminal and set the APN and network type in the Android system settings if it is required according to the SIM card manual.

5.6.2 Installation Steps

1. SIM card cover on the left of the control terminal and remove the SIM card cover .

© Sveaverken All rights reserved.

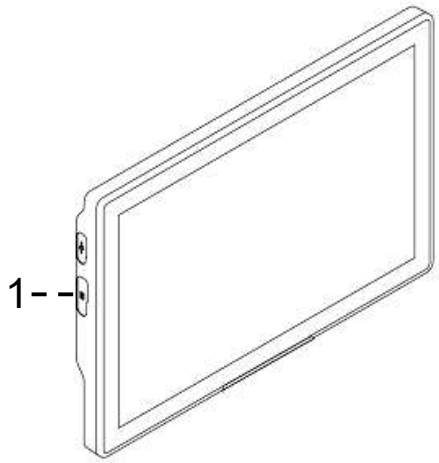

2. Slowly insert the SIM card into the slot with the chip facing the screen side, and use an ejector pin and tweezers when necessary.
3. Install the SIM card cover with a cross screwdriver.

5.7 Installing Wirinnes

5.7.1 Components

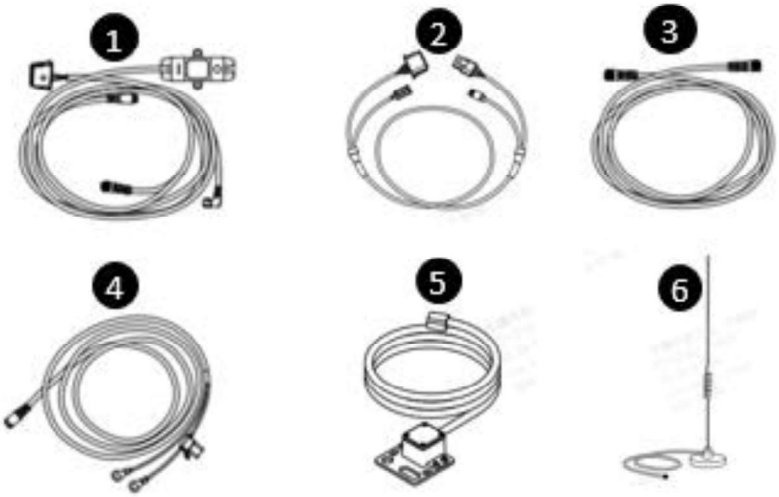

No.	Name	Qty.	Remarks
1	Main wiring harness	1	
2	Spare main wiring harness	1	
3	GNSS receiver wiring harness	1	
4	Main power cable	1	

© Sveaverken All rights reserved.

5	Angle sensor assembly	1	
6	Radio antenna	1	

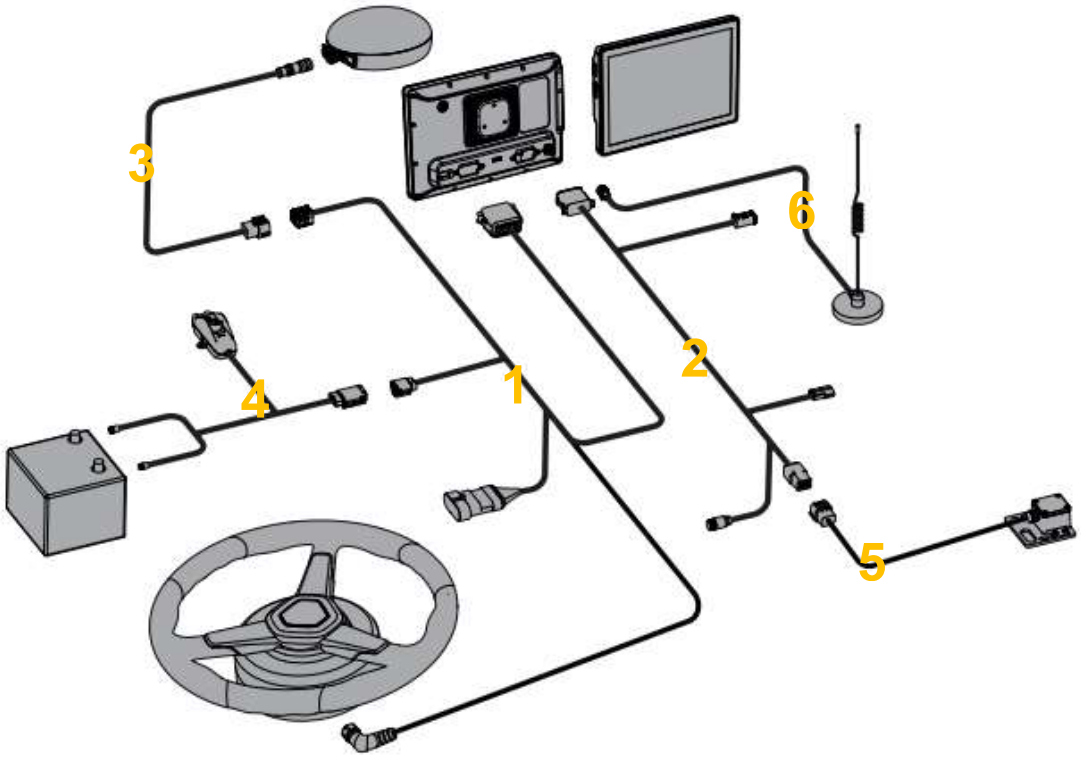

5.7.2 Installation Steps

Install the wiring harnesses according to the figure below.

Notes:

1. Do not plug or unplug the harness connectors or connect equipment when the power is on. Ensure that the machine and the battery are turned off.
2. Avoid high temperature and rugged places when wiring.
3. Connect the power wiring harness to the negative terminal first, and then connect it to the positive terminal and other wiring harnesses.
4. Keep the radio antenna away from the GNSS receiver, and ensure that it is firmly sucked and unobstructed.

© Sveaverken All rights reserved.

Installation Tips:

1. Main/Spare wiring harness: Lock the door on the right side of the cab, and then sort out the wiring harness and fix it on the right door handle or the A-pillar at the right front of the cab with nylon cable ties.
2. GNSS receiver wiring harness: Extend the wiring harness from the roof (such as the sunroof) along the cab to the right front of the seat.
3. Main power cable: Connect the negative connector of the wiring harness to the negative terminal of the battery, and do not connect the positive connector of the wiring harness at this time. Fix the wiring harness along the right side of the machine with nylon cable ties, and connect it into the cab from the right front of the cab.
4. Angle sensor assembly: Leave 10 cm of the wiring harness at the sensor side, fix the wiring harness along one side of the machine with nylon cable ties, and connect it into the cab from the front of the cab.
5. Radio antenna: Route the wiring harness in the same direction as that of the GNSS receiver, and keep the antenna away from the receiver.

© Sveaverken All rights reserved.

6 System Commissioning

6.1 Site Requirements

1. Ensure that the vehicle is in good condition and all parts work properly.
2. Ensure that there are no tall trees, buildings, or other obstacles around the site to protect the operation from signal interference.
3. Ensure that there are no high-voltage power lines within 150 m around the site.
4. The site ground should be level and no smaller than 50 m×10 m.
5. The site should have flat concrete pavement or asphalt pavement.
6. Commissioning should be carried out on non-public roads. Ensure that no irrelevant personnel stay around the vehicle during commissioning to prevent accidents.

6.2 Power-on

6.2.1 Inspection Before Power-on

1. Check whether the power supply is connected correctly.
2. Check whether the supply voltage is satisfactory.

6.2.2 Inspection After Power-on

1. Check whether the power indicator of the control terminal is lit.
2. Turn on the control terminal, and check whether the system program starts normally.

6.3 Parameter Calibration

For details, refer to the *Sveaverken Auto Steer System Software User Manual*.

© Sveaverken All rights reserved.

7 Appendix

7.1 Specifications

No.	Component	Specifications
1	Control terminal	External interface: SIM card slot×1, Type-C port×2 Power supply: 9 V – 36 V Signals received: radio, satellite, and 4G Relative humidity: 0% – 95%, 40°C (non-condensing) Operating temperature: -20°C to 70°C Storage temperature: -40°C to 85°C
2	GNSS receiver	Size: 162 mm×67 mm External interface: TNC dual antenna extension ×1, Type-C debug port ×1 Frequency band: GPS L1 C/A, BDS B1I, Galileo E1, GLONASS G1: 1559-1610MHz GPS L2C, GLONASS G2:1215-1300 MHz GPS L5, Galileo E5a, Galileo E5b: 1164-1215MHz Operating voltage: 9 V – 36 V Operating current: < 300 mA IMU accelerometer accuracy: 0.5 mg IMU gyroscope accuracy: 0.1°/s Roll/pitch: 0.2° Operating temperature: -20°C to 70°C Storage temperature: -40°C to 85°C
3	Radio antenna	IP rating: IP66 Frequency range: 902MHz -928 MHz(only RX) Voltage standing wave ratio: ≤2.0 Gain: 1±0.5 dBi Impedance: 50 Ω Polarization: vertical Size: ø82 mm×490 mm Operating temperature: -20°C to 60°C

© Sveaverken All rights reserved.

No.	Component	Specifications
4	Angle sensor	Supply voltage: 5 V Output frequency: max. 200 Hz Resolution: <0.1° Operating temperature: -20°C to 85°C IP rating: IP67
5	Electric steering wheel	Diameter: 380 mm Supply voltage: 12 V or 24 V IP rating: IP65

© Sveaverken All rights reserved.

FCC Warning

NOTE:This equipment has been tested and found to comply with the limits for a Class B digital device, pursuant to part 15 of the FCC Rules. These limits are designed to provide reasonable protection against harmful interference in a residential installation. This equipment generates, uses and can radiate radio frequency energy and, if not installed and used in accordance with the instructions, may cause harmful interference to radio communications. However, there is no guarantee that interference will not occur in a particular installation. If this equipment does cause harmful interference to radio or television reception, which can be determined by turning the equipment off and on, the user is encouraged to try to correct the interference by one or more of the following measures:

—Reorient or relocate the receiving antenna.

—Increase the separation between the equipment and receiver.

—Connect the equipment into an outlet on a circuit different from that to which the receiver is connected. —Consult the dealer or an experienced radio/TV technician for help.

Any changes or modifications not expressly approved by the party responsible for compliance could void the user's authority to operate the equipment.

This device complies with part 15 of the FCC Rules. Operation is subject to the following two conditions:

(1) This device may not cause harmful interference, and

(2) this device must accept any interference received, including interference that may cause undesired operation.

This equipment complies with FCC radiation exposure limits set forth for an uncontrolled environment. This equipment shall be installed and operated with minimum distance 20cm between the radiator&body.

© Sveaverken All rights reserved.