# SMD CERAMIC ANTENNA
# Data Sheet

# CS-2450-21-B

For 2400-2483MHz

2.0x1.2mm [EIA2012]

Manufacturer: Shenzhen Kewei Antenna Design Co., Ltd.
Address: Room 305, Building C, City Mountain Sea Center, No. 11, Zhongxing Road, Maantang Community, Bantian Subdistrict, Longgang District, Shenzhen City

## 特征 Feature

- 重量轻，结构紧凑 Light weight, compact
- 宽带大，低成本 Wide bandwidth, low cost
- 高增益内置天线 Built-in antenna with high gain
- 工作温度 Operating Temp. : -40℃~+85℃

## 应用 Application

- 蓝牙,无线局域网,移动电视 Bluetooth, Wireless LAN, Mobile TV
- 家用射频系统Home RF system, etc

**CS-2450-21-B**

## 电气特性 Electrical Characteristics per line(TA=25℃)

| 参数Parameter | 规格Specification | 单位Units |
|---|---|---|
| 频带 Frequency Band | 2400~2483 | MHz |
| 极化 Polarization | Linear | |
| *峰值增益 Peak Gain | 2.18 | dBi |
| *峰值效率 Peak Efficiency | 68.8% | % |
| 阻抗 Impendance | 50 | Ω |

*测试条件：测试板尺寸98×65mm；匹配电路：π型匹配电路。Test condition: Test board size 98*65 mm; Matching circuit: Pi matching circuit will be required

## 典型特征 Typical Characteristics

Fig.1 驻波比 VSWR

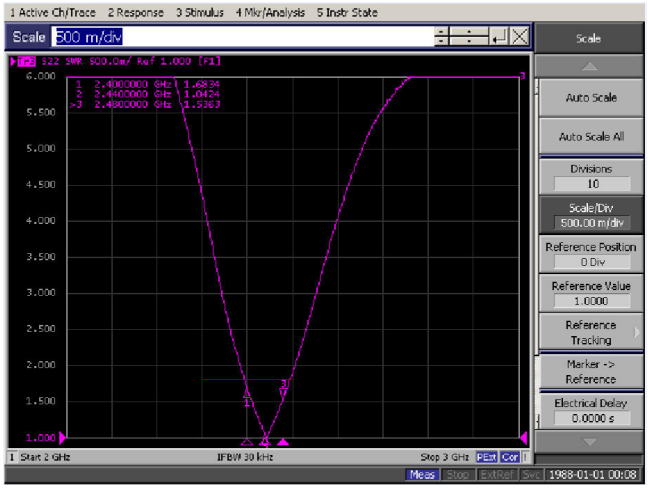

## 辐射模式 Radiation Pattern

增益模式是在暗室进行测试的，被测件放在桌肩位置，用标准的喇叭天线和矢量网络分析仪来收集数据。The Gain pattern is measured in FAR-field chamber. DUT is placed on the table of rotator，a standard horn antenna and Vector Network Analyzer is used to collect data.

Fig.2 暗室示意图

FAR-field Chamber

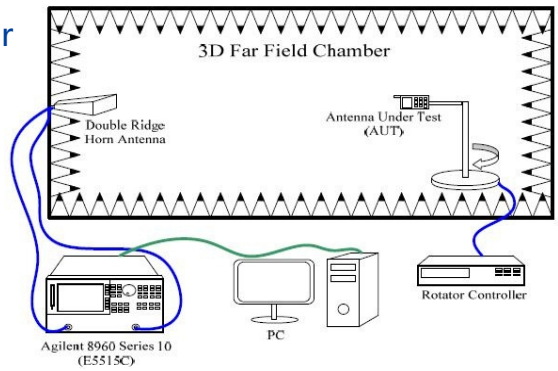


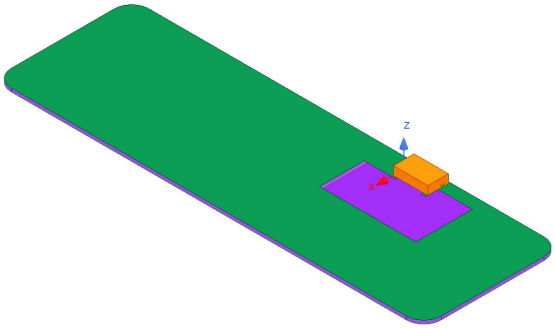

3D 增益模式

3D Gain Pattern (2400 MHz)

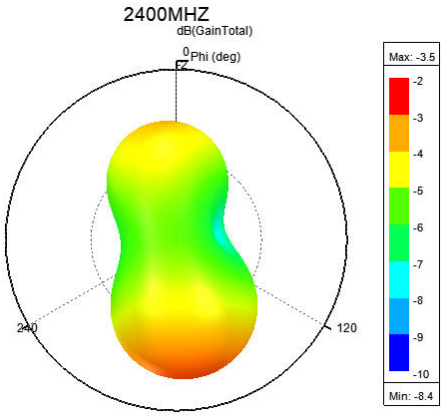


2D 增益模式 2D Gain Pattern (2400 MHz)

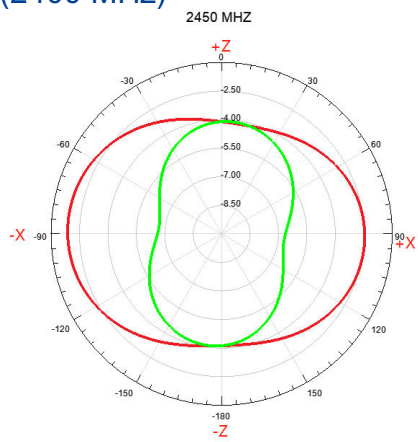

## 3D 增益模式
## 3D Gain Pattern (2450 MHz)

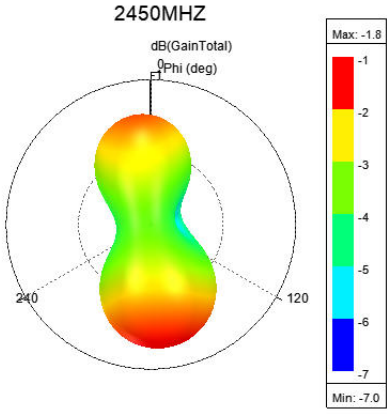


## 2D 增益模式 2D Gain Pattern (2450 MHz)

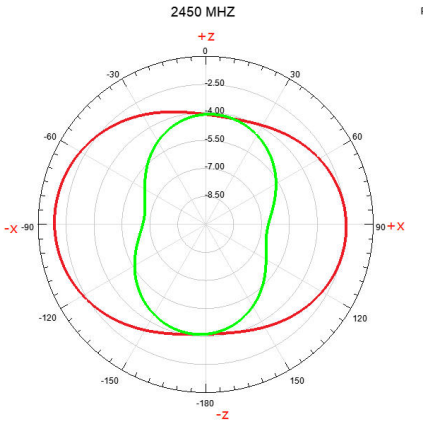


## 3D 增益模式
## 3D Gain Pattern (2500 MHz)

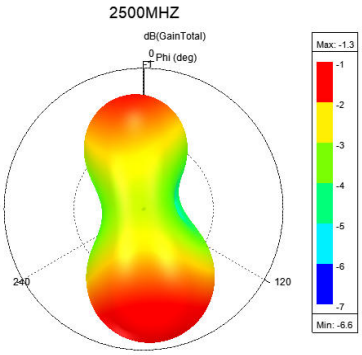


## 2D 增益模式 2D Gain Pattern (2500 MHz)

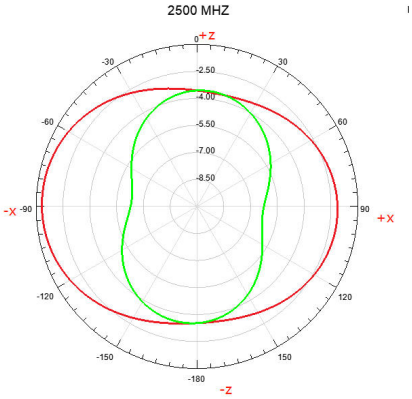

| 项目Item | 环境Condition | 规格Specification |
|---|---|---|
| 热冲击<br>Thermal shock | 1. 30±3 minutes at -40°C±5°C,<br>2. Convert to +105°C (5 minutes)<br>3. 30±3 minutes at +105°C±5°C,<br>4. Convert to -40°C (5 minutes)<br>5. Total 100 continuous cycles | No apparent damage<br>Fulfill the electrical spec. after test. |
| 抗湿性<br>Humidity resistance | 1. Humidity: 85% R.H.<br>2. Temperature: 85±5°C<br>3. Time: 1000 hours. | No apparent damage<br>Fulfill the electrical spec. after test. |
| 耐高温性<br>High temperature resistance | No apparent damage<br>Fulfill the electrical spec. after test. | 1. Temperature: 150°C±5°C<br>2. Time: 1000 hours. |
| 低温电阻<br>Low temperature resistance | 1. Temperature: -40°C±5°C<br>2. Time: 1000 hours. | No apparent damage<br>Fulfill the electrical spec. after test. |
| 耐焊接热性<br>Soldering heat resistance | 1. Solder bath temperature : 260±5℃<br>2. Bathing time: 10±1 seconds | No apparent damage |
| 焊锡性<br>Solderability | The dipped surface of the terminal shall be at least 95% covered with solder after dipped in solder bath of 245±5℃ for 3±1 seconds. | No apparent damage |

## (2) 储存环境 Storage Condition

(a)仓库：温度应在0～30℃之间，湿度应小于60%湿度，产品应在交货之日起1年内使用。At warehouse: The temperature should be within 0 ~ 30℃ and humidity should be less than 60% RH.The product should be used within 1 year from the time of elivery.

(b)在板：温度应在40～85℃之间，湿度应小于85%湿度。On board: The temperature should be within -40~85℃ and humidity should be less than 85% RH.

## (3) 工作环境温度 Operating Temperature Range

工作温度范围：-40℃ to +85℃。 Operating temperature range : -40℃ to +85℃.

## 推荐回流焊接曲线 Recommended Reflow Solder curve

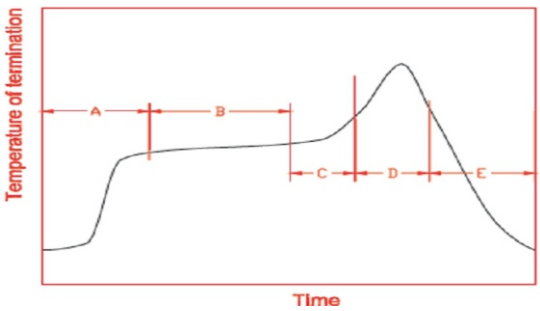


| | | | |
|---|---|---|---|
| A | 1st rising temperature | The normal to Preheating temperature | 30s to 60s |
| B | Preheating | 140℃ to 160℃ | 60s to 120s |
| C | 2nd rising temperature | Preheating to 200℃ | 20s to 40s |
| D | Main heating | if 220℃ | 50s～60s |
| | | if 230℃ | 40s～50s |
| | | if 240℃ | 30s～40s |
| | | if 250℃ | 20s～40s |
| | | if 260℃ | 20s～40s |
| E | Regular cooling | 200℃ to 100℃ | 1℃/s ～ 4℃/s |

*reference: J-STD-020C

### (1) 电烙铁的使用 Soldering Gun Procedure

以下注意事项仅针对使用电烙铁进行个别器件更换。

Note the follows, in case of using solder gun for replacement.

(a) 使用小于30W的电烙铁，温度不高于350°C，焊接时间小于3秒。

The tip temperature must be less than 350°C for the period within 3 seconds by using soldering gun under 30 W.

(b) 烙铁不可直接接触器件本体。

The soldering gun tip shall not touch this product directly.

### (2) 焊锡量 Soldering Volume

注意焊接过程中过多的焊锡量会损害器件本体。

Note that excess of soldering volume will easily get crack the body of this product.

## 产品尺寸 Product Dimension

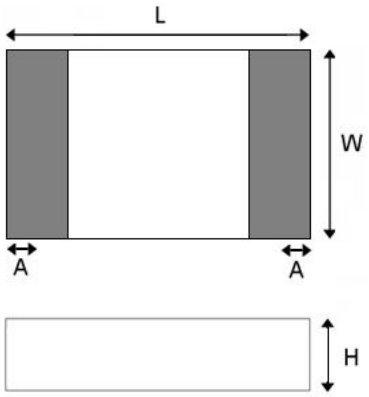


| L | W | H | A |
|---|---|---|---|
| 2.0±0.3 | 1.2±0.3 | 0.55±0.1 | 0.3 ±0.1 |

## 推荐焊盘&Evaluation Board

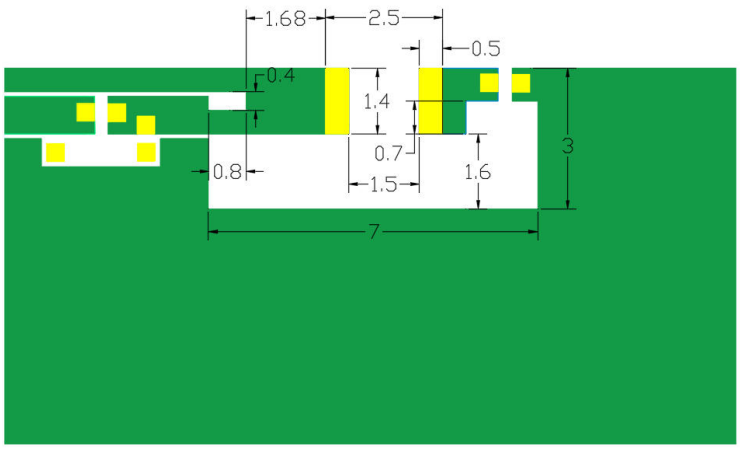


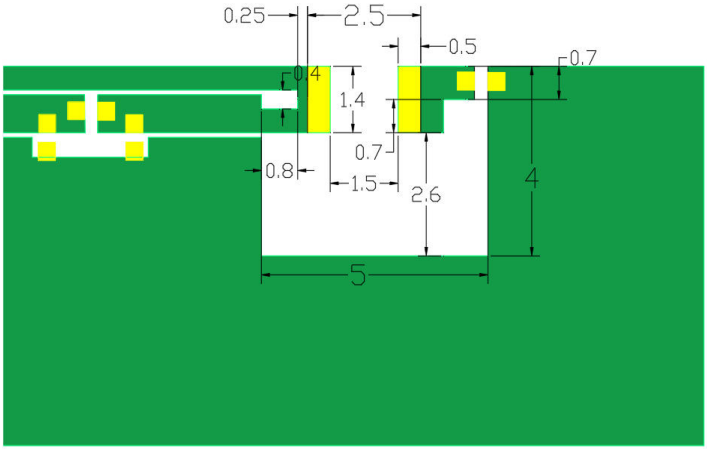

## 应用环境 Application Guide

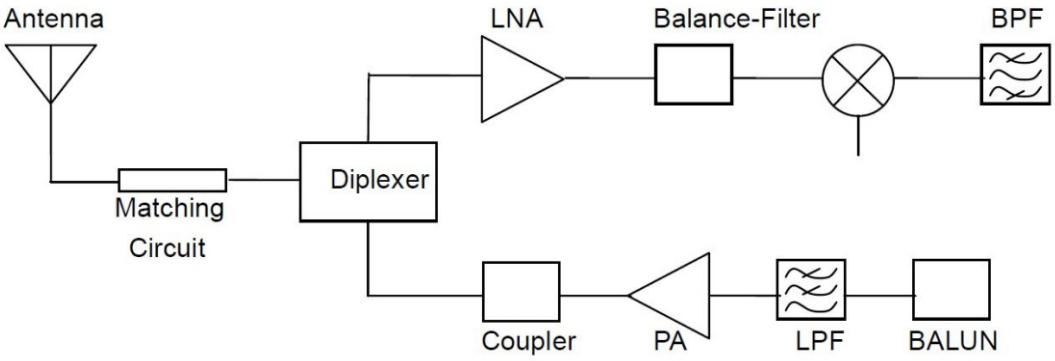


## 包装信息Package Information

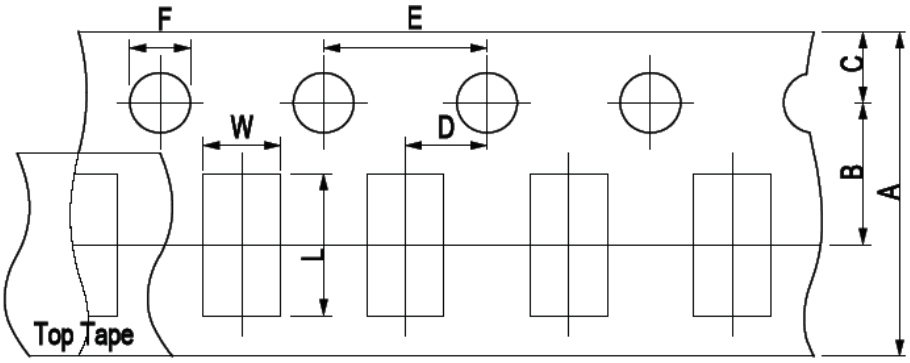


| A | B | C | D | E | F | L | W |
|---|---|---|---|---|---|---|---|
| 8.00±0.3 | 3.50± 0.05 | 1.75±0.1 | 2.00±0.05 | 4.00±0.1 | 1.50±0.1 | 2.30± 0.1 | 1.55± 0.1 |

## 编码规则 Part Number System

CS - 2450 - 21-B

- 21-B: External Dimensions L*W (mm) 2.0*1.2
- 2450: Central Frequency 2450MHz
- CS: Product Series: Chip Antenna

## 丝印 Marking

## 订货信息Order Information

| 设备<br>Device | 包装<br>Package | 净重<br>Net Weight | 运送方式<br>Carrier | 数量<br>Quantity | 认证<br>HSF Status |
|---|---|---|---|---|---|
| CS-2450-21-B | 2012 | 0.0014g | Tape&Reel | 5000pcs | RoHS compliant |

## 版本信息 Revision history

| 日期/Date | 版本号/Revision | 版本描述/Description of changes |
|---|---|---|
| 2021-4-2 | 1.0 | First Version |
| 2022-1-2 | 1.1 | Second Version |
| | | |

The contents of this data sheet are subject to change without notice.
Please confirm the specifications and delivery conditions when placing your order.

© Copyright 2015, Keweixin Electronics
All rights reserved