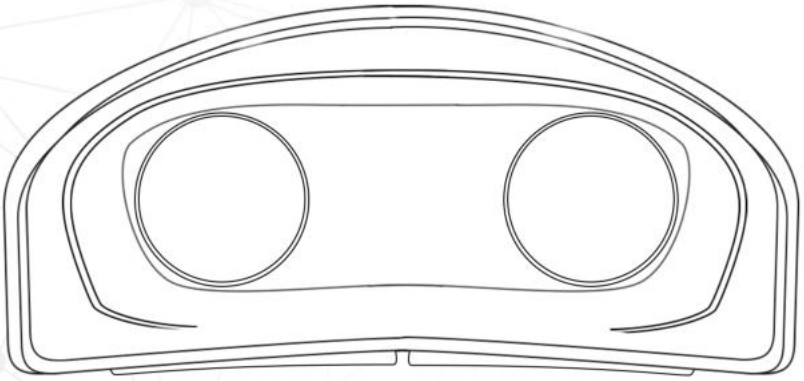

VW Digital Cluster
User manual

Model:CLHPC10038VW-T6T5.1

Function Video Introduction

Installation Way for the VW car :

* Digital dashboarc cluster for 2017 years passat modify installation：
https://youtu.be/D8tlx6h0Svw

SCAN ME

* Digital dashboard cluster for Golf 6 Mechanical Instruments modify installation way：https://youtu.be/K9JSKCPHikc

SCAN ME

* Digital dashboard cluster for volkswagen Golf 7 mechanical instrument modify installation：https://youtu.be/WLpN78sgNgY

SCAN ME

* Digital dashboard cluster for Volkswagen Tiguan/Scirocco mechanical instrument modify installation：https://youtu.be/ySrg55XC30E

SCAN ME

* Digital dashboard cluster for VW Passat B8 jetta mechanical instrument modify installation：https://youtu.be/byIYaPyUa24

SCAN ME

* Digital dashboard cluster for Audi TT mechanical instrument modify installation：https://youtu.be/DDE39FJGePY

SCAN ME

Function Video Introduction

If don`t have the steering wheel button .

* how to use the wiper buttons to control the vw golf 6 /passat b6 digital cluster ： https://youtube.com/shorts/2zBW2YMkDOw

SCAN ME

* VW device turkey language update way in the digital cluster : https://youtu.be/QmufLxmte3I

SCAN ME

* How to wireless/wire connect the iPhone or android phone for VW digital cluster： https://youtu.be/n73xdKejsDQ

SCAN ME

* How to connect the HDMI cable for the Volkswagen digital cluster with the radio android player : https://youtu.be/yb73_PnrOms

SCAN ME

* iPhone apple or huawei android phone connect the HDMI cable CarPlay/android auto synchronize to the digital cluster : https://youtube.com/shorts/4mmm1TM8gMA

SCAN ME

Digital Function setting way

Dashboard relate question

1. **Kilometer setting:** Click on the main interface settings -Advanced settings- Enter password "123456"and click "OK" to confirm. In the total mileage column, enter the mileage value displayed on the original instrument panel, and then press the confirm button.

2. **Model settings:** Click on the main interface settings - Advanced settings - Enter password "123456", click "OK" to confirm, and select the corresponding model in the model selection bar.

3. **VW Fuel tank capacity setting:** Click on the main interface settings -Advanced settings-Enter password "123456", click "OK" to confirm, enter 93L in the main fuel tank capacity column, click the confirm button, enter 45L in the secondary fuel tank capacity column, and then click the confirm button.

Digital Cluster normal question & answer

Mirror screen relate question

1. Q: Mobile phone screen casting sometimes does not cast the screen, see the RK but can not connect, or can not find the RK.

   R: The previous connection is not completely disconnected, turn off the engine and lock the car completely disconnected and wait 5 minutes, restart the phone a bit.

2. Q: Phone casting about audio why is it inside the dash and no sound from the car navigation.

   R: This is determined by the mobile phone. Mobile phones such as Samsung and Huawei phones are able to wirelessly cast the video screen to the instrument viaWIFI, and the sound is sent to the centre navigation's speaker inside via Bluetooth.But Apple's IOS system is too closed. Doesn't support audio and video to go separately. Operation: cast the screen to the instrument, the Bluetooth of the mobile phone connects to the Bluetooth of the centre control navigation.

3. Q: The phone cast and navigation interface can't be found.

   R: You can see the navigation interface showing the compass press the multifunction steering wheel down button to bring it up.

4. Q: Why is the mobile phone screen casting only a small piece in the middle and the display interface is very small?

   R: Pull down the mobile phone from the top, like turning on theWIFI, close the function of vertical screen lock, enter the navigation map or video software, shake the mobile phone, horizontal screen display, you can, in the digital UI mode, you can display the full screen navigation or video. Setting method: Press the left button on the right side of the square control to find the interface menu, press the down button to choose "digital" mode, press OK button.

5. Q: When the phone is resting on the screen, the dash casting interface the mobile phone into also follows the black screen.

   R: This is a mobile phone decision, some mobile phones can be screen casting. For example, Samsung,Huawei, Vivo,etc. the mobile phone into the screen casting settings - open the screen casting. If you do not have this feature of the phone can be set to the phone off screen time permanently or a little longer.

Dashboard relate question

1. Q : Bluetooth and WiFi.

   R : The Bluetooth and WiFi functions of the meter are for remote upgrade of the catchprotocol use. Do not make settings.

2. Q : Vehicle Selection.

   R : Setting method: Press the left button on the right side of the multifunctional reassurance disc to find the "Settings" menu, press the down button to find the"Model Selection", press the OK button to enter, press the down button to find the model of your own vehicle, press the OK button to confirm, turn off the engine and lock the car for two minutes after the power on to modify the success of the car.

3. Q : time setting.

   R : PQ doesn't have the year, month and day,MQB does relate Inside the settings –time settings-.

4. Q : Maintenance Information Clear.

   R : In Subtotal Mileage-Clear.

5. Q : PQ turn signals not showing.

   R : In settings-physical lights-off-lock the car with the engine off for a few minutes.

6. Q : PQ tanks are not allowed.

   R : In Settings-Configuration Calibration-Manual-adjust downward with the actual tank a little bit until the tank is full.

7. Q : No speed allowed.

   R : In Settings-Configuration Calibration-Faster car speed is adjusted to -3, slower to +3.

8. Q : The car dings at some fixed speed above 30.

   R : Set the speed limit alarm in the original mechanical instrumentation to 250 before switching it off.

After-sales Contact

Please download the skype ID from the phone, add our engineer skype ID if you have any tech problem . please don`t give any bad feedback before contacting . if you are sastifed with it , still hope that you can give us good feedback . which can let us do better service for more customer in future . thanks for you support and buying . let us do good service for you !

Sale Contact way : +86 13360093498

Email address : candicesong1985@163.com

(aliexpress /alibaba chatting contact)

Please add our engineer

Skype ID : live:.cid.fd83a6a056155b8f

the W-H-A-T-S-A-P-P Number : +905010825798

we offer professional engineer help for the installation. if you try but have question, please warmly welcome to contact wit our seller or our engineer.

Please download the skype ID from the phone, add our engineer skype ID if you have any tech problem . please don`t give any bad feedback before contacting . if you are sastifed with it , still hope that you can give us good feedback . which can let us do better service for more customer in future . thanks for you support and buying . let us do good service for you !

This device complies with part 15 of the FCC Rules. Operation is subject to the following two conditions: (1) This device may not cause harmful interference, and (2) this device must accept any interference received, including interference that may cause undesired operation.

Any Changes or modifications not expressly approved by the party responsible for compliance could void the user's authority to operate the equipment.

Note: This equipment has been tested and found to comply with the limits for a Class B digital device, pursuant to part 15 of the FCC Rules. These limits are designed to provide reasonable protection against harmful interference in a residential installation. This equipment generates uses and can radiate radio frequency energy and, if not installed and used in accordance with the instructions, may cause harmful interference to radio communications. However, there is no guarantee that interference will not occur in a particular installation. If this equipment does cause harmful interference to radio or television reception, which can be determined by turning the equipment off and on, the user is encouraged to try to correct the interference by one or more of the following measures:

-Reorient or relocate the receiving antenna.

-Increase the separation between the equipment and receiver.

-Connect the equipment into an outlet on a circuit different from that to which the receiver is connected.

-Consult the dealer or an experienced radio/TV technician for help.

-This equipment complies with FCC radiation exposure limits set forth for an uncontrolled environment. This equipment should be installed and operated with minimum distance 20cm between the radiator & your body.

Third floor, No.56 of Anxing Road,Dakang comunity,
Henggang town,Longgang district,shenzhen city ,Guangdong province.China
seller candice phone No : +86 13360093498
Email address : candicesong1985@163.com

TikTok Dingding Engineer Wechat Engineer Whatsapp Sale Wechat