EMC TEST REPORT

Product Name:	Alarm Clock Radio
FCC ID:	2BOV9-H249US
Trade mark:	N/A
Model No.:	H249US, H249
S/N:	/
Report No.:	CTB25052609102E01
Applicant:	Shenzhen Huixing Electronics Co., Ltd
Address:	Room701, Second Unit, Building 1, Fuqian Road, Fumin Community, Fucheng Street, Longhua District, Shenzhen, 518000 China
Manufacturer:	Shenzhen Huixing Electronics Co., Ltd
Address:	Room701, Second Unit, Building 1, Fuqian Road, Fumin Community, Fucheng Street, Longhua District, Shenzhen, 518000 China
Prepared by:	Shenzhen CTB Testing Technology Co., Ltd.
Address:	1&2/F., Building A, No.26, Xinhe Road, Xinqiao, Xinqiao Street, Bao'an District, Shenzhen, Guangdong, China
Date of Receipt:	May. 26, 2025
Date of Test(s):	May. 26, 2025 ~ Jun. 12, 2025
Date of Issue:	Jun. 12, 2025
Test Standard(s):	CFR47, FCC Part 15 Subpart B, ANSI C63.4: 2014
Test Result:	Pass

In the configuration tested, the EUT complied with the standards specified above.

Compiled by:	Reviewed by:	Approved by:
Michael Niu	Bin Mei	Rita Xiao

Note: If there is any objection to the inspection results in this report, please submit a written report to the company within 15 days from the date of receiving the report. The test report is effective only with both signature and specialized stamp. This result(s) shown in this report refer only to the sample(s) tested. Without written approval of Shenzhen CTB Testing Technology Co., Ltd. this report can't be reproduced except in full. The tested sample(s) and the sample information are provided by the client. "★" indicates the testing items were fulfilled by subcontracted lab. "※" indicates the items are not in CNAS accreditation scope.

Table of Contents

1. Description of version 3
2. Test summary 4
3. Measurement uncertainty 5
4. General information 6
   4.1. Description of EUT 6
   4.2. Description of accessory device 6
   4.3. Test conditions 6
   4.4. Block diagram of EUT configuration 6
   4.5. Operating condition of EUT 6
5. List of Test and Measurement Instruments 7
6. Conducted Emission 9
   6.1. Limit 9
   6.2. Test setup 9
   6.3. EMI test receiver setup 9
   6.4. Test procedure 9
   6.5. Test results 10
7. Radiated emissions 12
   7.1. Limit 12
   7.2. Test setup 12
   7.3. EMI test receiver setup and spectrum analyzer setup 13
   7.4. Test procedure 13
   7.5. Corrected Amplitude & Margin Calculation 13
   7.6. Test results 14
8. Photographs of test setup 17

1. Description of version

Report No.	Issue Date	Description	Approved
CTB25052609102E01	Jun. 12, 2025	Original	Valid

2. Test summary

Test procedures according to the technical standards:

Standard	Test Item	Test Result
§15.107	Conducted Emission	PASS
§15.109	Radiated Emission	PASS

3. Measurement uncertainty

The reported uncertainty of measurement y ± U, where expended uncertainty U is based on a standard uncertainty multiplied by a coverage factor of k=2, providing a level of confidence of approximately 95 %

Test Item	Frequency	Expanded Uncertainty (U_{Lab})
Conducted Emission	150 kHz to 30 MHz	±3.1 dB
Radiated Emission	30 MHz to 1000 MHz	±4.1 dB
Radiated Emission	1000 MHz to 6000 MHz	±4.8 dB

4. General information

4.1. Description of EUT

Product name	Alarm Clock Radio
Trade mark	N/A
Model No.	H249US
Serial Model No.	H249
Model Difference	All the model are the same circuit and RF module, only the model names are different. Test sample model: H249US
Configuration	☒ Table-top ☐ Floor-standing
The highest frequency of the internal sources of the EUT	☐ below 1.705 MHz, the measurement shall only be made up to 30 MHz. ☒ between 1.705 MHz and 108 MHz, the measurement shall only be made up to 1 GHz. ☐ between 108 MHz and 500 MHz, the measurement shall only be made up to 2 GHz. ☐ between 500 MHz and 1 GHz, the measurement shall only be made up to 5 GHz. ☐ above 1 GHz, the measurement shall be made up to 5th harmonic of the highest frequency or 40 GHz, whichever is lower.
Ratings	AC 120V/60Hz DC 3V by battery

Note: The above EUT information is declared by manufacturer and for more detailed features description, please refer to the manufacturer's specifications or the User's Manual.

4.2. Description of accessory device

No.	Device Type	Brand	Model	Specification	Note
/	/	/	/	/	/

4.3. Test conditions

Temperature: 15-25℃
Relative Humidity: 30-60 %
Atmospheric pressure: 800hPa-1060hPa

4.4. Block diagram of EUT configuration

AC Mains — Adapter — EUT — Resistor

4.5. Operating condition of EUT

Operating condition	Mode 1	FM RX	Test Voltage	AC 120V/60Hz
	Mode 2	FM RX	Test Voltage	DC 3V
Note:This test covers all possible operating modes of the device, only the worst data are list in report. The worst data are shows (*)is the nearest standard limit which were recorded in this report.				

5. List of Test and Measurement Instruments

Continuous disturbance						
No.	Equipment	Manufacturer	Model No.	Serial No.	Firmware version	Calibrated until
1	843 Shield Room	C/ R/ T	843	/	/	2027/6/21
2	AMN	ROHDE&SCHWARZ	ESH3-Z5	831551852	/	2025/6/30
3	Pulse limiter	ROHDE&SCHWARZ	ESH3Z2	357881052	/	2025/6/28
4	EMI TEST RECEIVER	ROHDE&SCHWARZ	ESCI	100428	V4.42.SP3	2025/6/30
5	Coaxial cable	ZDECL	Z302S	18091904	/	2025/6/30
6	ISN	Schwarzbeck	NTFM8158	183	/	2025/6/30
7	Voltage sensor	Schwarzbeck	TK 9420	01189	/	2025/10/25
8	EZ-EMC	Frad	EMC-con3A1.1	/	/	/
9	Current Probe	FCC	F-52B	199453	/	2025/5/27
10	Communication test set	R&S	CMW500	108058	B.19.07 (E1962B)	2025/6/28
11	Communication test set	Agilent	E5515C	MY50102567	V3.5.80	2025/6/28

Radiated emission(No.1 Chamber)						
No.	Equipment	Manufacturer	Model No.	Serial No.	Firmware version	Calibrated until
1	966 Chamber	C/ R/ T	966	/	/	2027/6/21
2	Double Ridged Broadband Horn Antenna	Schwarzbeck	BBHA 9120 D	01911	/	2025/7/06
3	TRILOG Broadband Antenna	Schwarzbeck	VULB 9168	00869	/	2025/6/29
4	Amplifier	Agilent	8449B	3008A01838	/	2025/6/30
5	Amplifier	HP	8447E	2945A02747	/	2025/6/28
6	loop antenna	Schwarzbeck	FMZB 1519B	1519B-224	/	2025/6/29
7	EMI TEST RECEIVER	ROHDE&SCHWARZ	ESPI	100362	RF_ATTEN_7 (104489/003)	2025/6/28
8	Spectrum Analyzer	KEYSIGHT	N9020A	MY51289897	A.14.16	2025/6/28
9	Coaxial cable	ETS	RFC-SNS-100-NMS-80	/	/	2025/6/28
10	Coaxial cable	ETS	RFC-SN-100-NMS-20	/	/	2025/6/28
11	Coaxial cable	ETS	RFC-SNS-100-SMS-20	/	/	2025/6/28

12	Coaxial cable	ETS	RFC-NNS-100-NMS-300	/	/	2025/6/28
13	EMI test software	Frad	EZ-EMC	Ver/ FA-03A2 RE	/	/
14	Communication test set	R&S	CMW500	108058	B.19.07 (E1962B)	2025/6/28
15	Communication test set	Agilent	E5515C	MY50102567	V3.5.80	2025/6/28

6. Conducted Emission

6.1. Limit

Except for Class A devices:

Frequency of emission (MHz)	Conducted limit (dBμV)	
	Quasi-peak	Average
0.15-0.5	66 to 56*	56 to 46*
0.5-5	56	46
5-30	60	50

Note: Decreases with the logarithm of the frequency.

For Class A devices:

Frequency of emission (MHz)	Conducted limit (dBμV)	
	Quasi-peak	Average
0.15-0.5	79	66
0.5-30	73	60

6.2. Test setup

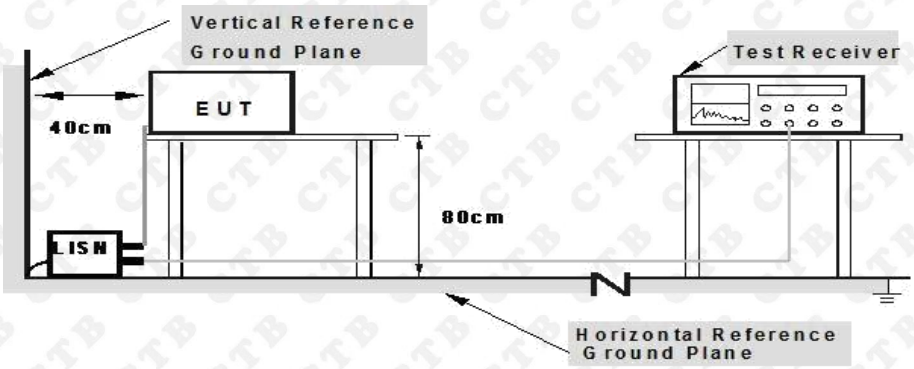

Note: 1.Support units were connected to second LISN.
2.Both of LISNs (AMN) are 80 cm from EUT and at least 80 from other units and other metal planes

The setup of EUT is according with ANSI C63.4 measurement procedure. Specification used with FCC Part 15 limits.

6.3. EMI test receiver setup

Frequency Range	9kHz-30MHz
Resolution Bandwidth	200Hz (9kHz-150kHz) 9kHz (150kHz-30MHz)

6.4. Test procedure

1. Measurement was performed in shielded room, and instruments used were followed clause 4 of ANSI C63.4.
2. Detailed test procedure was following clause 7 of ANSI C63.4.
3. Frequency range 150kHz – 30MHz was checked and EMI receiver measurement bandwidth was set to 9 kHz.

6.5. Test results

Temperature:	23℃	Relative Humidity:	54 %
Pressure:	101kPa	Phase :	Line
Test Voltage :	AC 120V/60Hz	Test Mode:	Mode 1

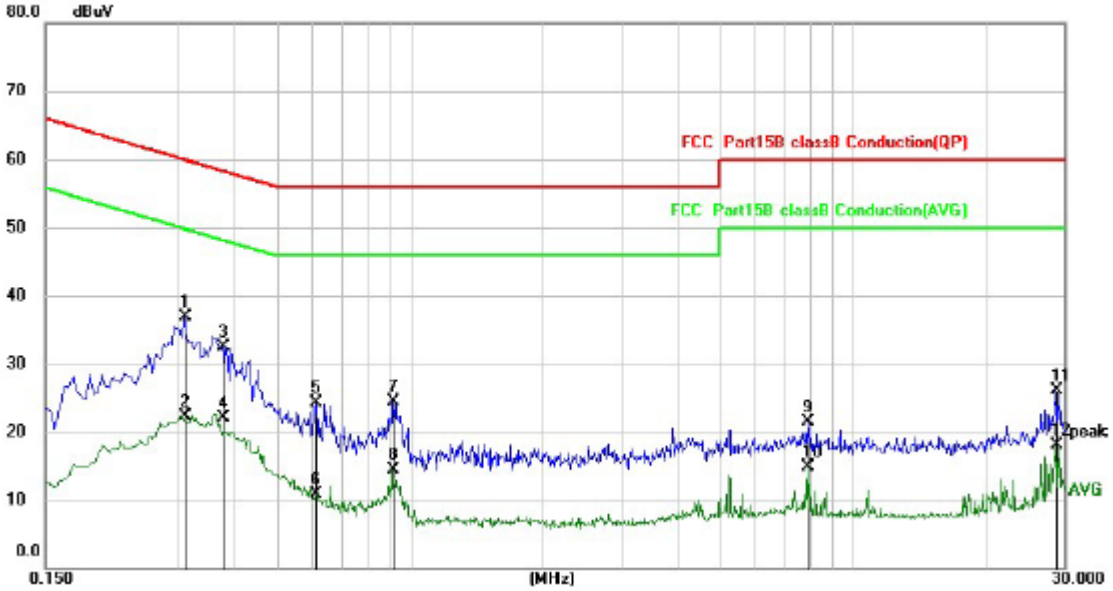

No.	Mk.	Freq.	Reading Level	Correct Factor	Measure-ment	Limit	Over	
		MHz	dBuV	dB	dBuV	dBuV	dB	Detector
1	*	0.3100	26.18	10.63	36.81	59.97	-23.16	QP
2		0.3100	11.75	10.63	22.38	49.97	-27.59	AVG
3		0.3780	21.97	10.59	32.56	58.32	-25.76	QP
4		0.3780	11.57	10.59	22.16	48.32	-26.16	AVG
5		0.6140	13.70	10.63	24.33	56.00	-31.67	QP
6		0.6140	0.23	10.63	10.86	46.00	-35.14	AVG
7		0.9140	13.61	10.88	24.49	56.00	-31.51	QP
8		0.9140	3.66	10.88	14.54	46.00	-31.46	AVG
9		7.9220	8.55	13.03	21.58	60.00	-38.42	QP
10		7.9220	1.90	13.03	14.93	50.00	-35.07	AVG
11		28.6860	11.65	14.37	26.02	60.00	-33.98	QP
12		28.6860	3.76	14.37	18.13	50.00	-31.87	AVG

Note: Result=Reading + Factor
Over Limit=Result - Limit

Temperature:	23℃	Relative Humidity:	54 %
Pressure:	101kPa	Phase :	Neutral
Test Voltage :	AC 120V/60Hz	Test Mode:	Mode 1

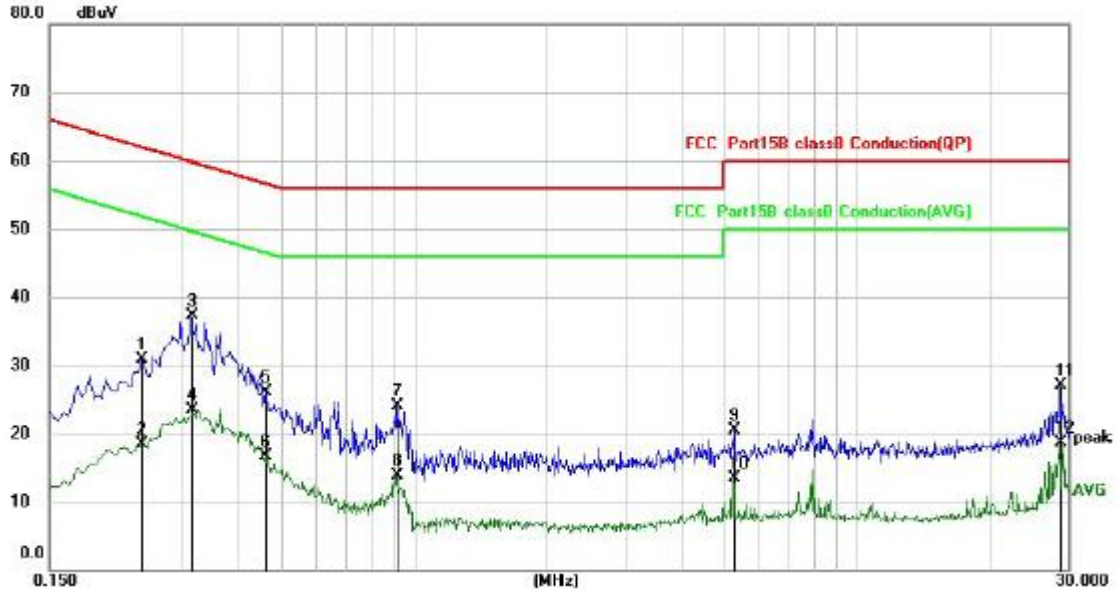

No.	Mk.	Freq.	Reading Level	Correct Factor	Measure-ment	Limit	Over	
		MHz	dBuV	dB	dBuV	dBuV	dB	Detector
1		0.2420	20.22	10.68	30.90	62.03	-31.13	QP
2		0.2420	7.75	10.68	18.43	52.03	-33.60	AVG
3	*	0.3140	26.69	10.63	37.32	59.86	-22.54	QP
4		0.3140	12.81	10.63	23.44	49.86	-26.42	AVG
5		0.4620	15.67	10.53	26.20	56.66	-30.46	QP
6		0.4620	6.17	10.53	16.70	46.66	-29.96	AVG
7		0.9140	13.14	10.88	24.02	56.00	-31.98	QP
8		0.9140	2.93	10.88	13.81	46.00	-32.19	AVG
9		5.2979	8.07	12.34	20.41	60.00	-39.59	QP
10		5.2979	1.12	12.34	13.46	50.00	-36.54	AVG
11		28.6860	12.67	14.37	27.04	60.00	-32.96	QP
12		28.6860	4.27	14.37	18.64	50.00	-31.36	AVG

Note: Result=Reading + Factor
Over Limit=Result – Limit

7. Radiated emissions

7.1. Limit

Except for Class A devices (at 3m):

Frequency of emission (MHz)	Field strength (microvolts/meter)	
	(microvolts/meter)	(dBμV/m)
30-88	100	40
88-216	150	43.5
216-960	200	46
Above 960	500	54

For Class A devices (at 10m):

Frequency of emission (MHz)	Field strength (microvolts/meter)	
	(microvolts/meter)	(dBμV/m)
30-88	90	39
88-216	150	43.5
216-960	210	46.4
Above 960	300	49.5

7.2. Test setup

Radiated Emission Test Set-Up Frequency Below 1 GHz

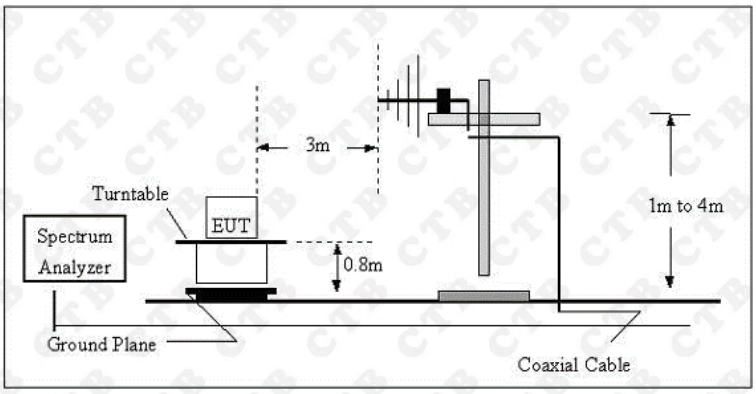

Radiated Emission Test Set-Up Frequency Above 1GHz

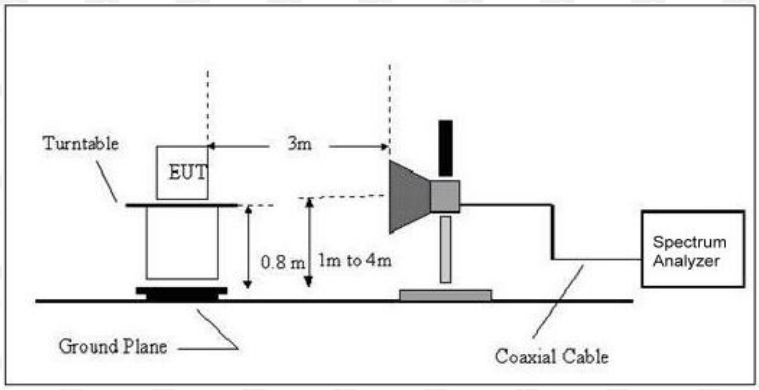

The radiated tests were performed in 3 meter Charmber test site, using the setup accordance with the ANSI C63.4:2014.

7.3. EMI test receiver setup and spectrum analyzer setup

During the radiated emission test, the EMI test receiver and Spectrum Analyzer were set with the following configurations:

Frequency Range	RBW	Video B/W	IF B/W	Detector
30MHz-1000MHz	100kHz	300kHz	120kHz	QP
Above 1GHz	1MHz	3MHz	/	PK
	1MHz	10Hz	/	AVG

7.4. Test procedure

1. The measurement was performed in a semi-anechoic chamber, and instruments used were followed clause 4 of ANSI C63.4

2. Detailed test procedure was following clause 8 of ANSI C63.4.

7.5. Corrected Amplitude & Margin Calculation

1. The Corrected Amplitude is calculated by adding the Antenna Factor and Cable Loss, and subtracting the Amplifier Gain from the Meter Reading. The basic equation is as follows:

   Corrected Amplitude = Meter Reading + Antenna Factor + Cable Loss - Amplifier Gain

2. The “Margin” column of the following data tables indicates the degree of compliance with the applicable limit. For example, a margin of 7dB means the emission is 7dB below the limit. The equation for margin calculation is as follows:

   Margin = Limit – Corrected Amplitude

7.6. Test results

Temperature:	23℃	Relative Humidity:	54 %
Pressure:	101kPa	Polarization :	Horizontal
Test Voltage :	AC 120V/60Hz	Test Mode:	Mode 1

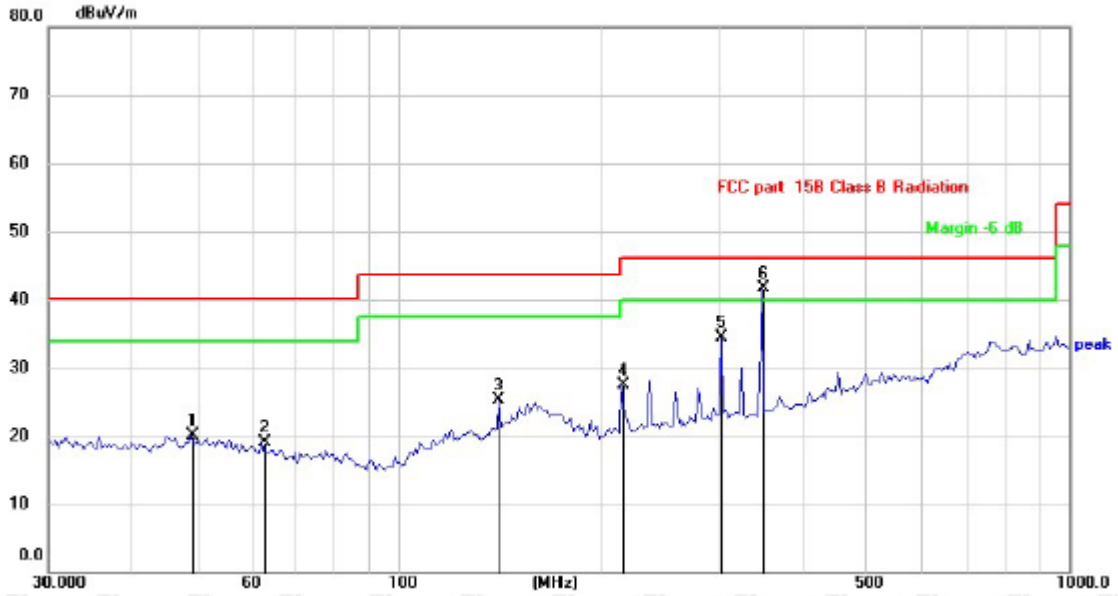

No.	Mk.	Freq.	Reading Level	Correct Factor	Measure-ment	Limit	Over	
		MHz	dBuV	dB	dBuV/m	dB/m	dB	Detector
1		49.0145	26.66	-6.65	20.01	40.00	-19.99	QP
2		62.6507	26.83	-7.69	19.14	40.00	-20.86	QP
3		141.5777	29.47	-4.08	25.39	43.50	-18.11	QP
4		215.6456	32.02	-4.50	27.52	43.50	-15.98	QP
5		303.5437	37.26	-2.82	34.44	46.00	-11.56	QP
6	*	349.2500	43.59	-1.83	41.76	46.00	-4.24	QP

Note: Result=Reading+Factor
Over Limit=Result-Limit

Temperature:	23℃	Relative Humidity:	54 %
Pressure:	101kPa	Polarization :	Vertical
Test Voltage :	AC 120V/60Hz	Test Mode:	Mode 1

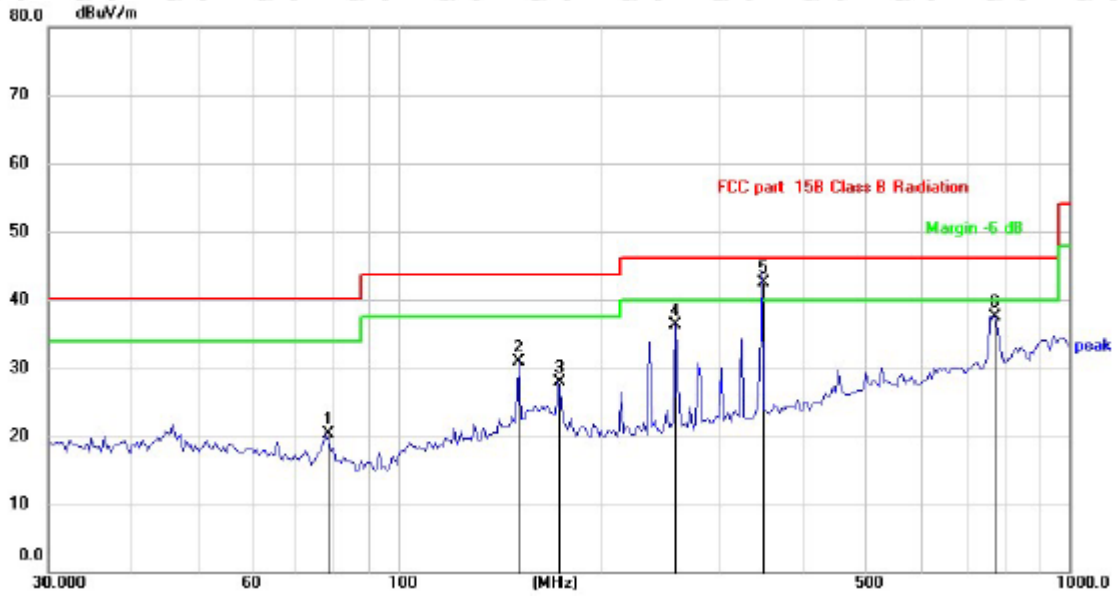

No.	Mk.	Freq.	Reading Level	Correct Factor	Measure-ment	Limit	Over	
		MHz	dBuV	dB	dBuV/m	dB/m	dB	Detector
1		78.0020	28.95	-8.68	20.27	40.00	-19.73	QP
2		151.8632	33.44	-2.48	30.96	43.50	-12.54	QP
3		173.2051	30.55	-2.57	27.98	43.50	-15.52	QP
4		259.2338	39.93	-3.64	36.29	46.00	-9.71	QP
5	*	349.2500	44.40	-1.83	42.57	46.00	-3.43	QP
6		775.5169	30.56	6.91	37.47	46.00	-8.53	QP

Note: Result=Reading+Factor
Over Limit=Result-Limit

Above 1 GHz Test Results:

CH Low (2402MHz)
Horizontal:

Frequency (MHz)	Meter Reading (dBμV)	Factor (dB)	Emission Level (dBμV/m)	Limits (dBμV/m)	Margin (dB)	Detector Type
2402	110.05	-5.84	104.21	N/A	N/A	peak
2402	93.25	-5.84	87.41	N/A	N/A	AVG
4804	56.71	-3.64	53.07	74	-20.93	peak
4804	48.37	-3.64	44.73	54	-9.27	AVG
7206	58.49	-0.95	57.54	74	-16.46	peak
7206	50.23	-0.95	49.28	54	-4.72	AVG
Remark: Factor = Antenna Factor + Cable Loss – Pre-amplifier. Emission level = Reading Result + Factor, Margin = Emission level - Limits						

Vertical:

Frequency (MHz)	Meter Reading (dBμV)	Factor (dB)	Emission Level (dBμV/m)	Limits (dBμV/m)	Margin (dB)	Detector Type
2402	110.92	-5.84	105.08	N/A	N/A	peak
2402	93.26	-5.84	87.42	N/A	N/A	AVG
4804	58.13	-3.64	54.49	74	-19.51	peak
4804	48.82	-3.64	45.18	54	-8.82	AVG
7206	58.55	-0.95	57.60	74	-16.40	peak
7206	49.25	-0.95	48.30	54	-5.70	AVG
Remark: Factor = Antenna Factor + Cable Loss – Pre-amplifier. Emission level = Reading Result + Factor, Margin = Emission level - Limits						

Remark:
(1). Measuring frequencies from 9KHz to the 25 GHz, The test range is 9K ~10 times the main wave, and other spurious below the limit of 20dB will not be reflected in the report.
(2). All modes of FM RX were test at Low, Middle, and High channel, only the worst result of FM Low Channel was reported for below 1GHz test.
(3). For FM RX above 1GHz test all modes of FM RX were test at Low, Middle, and High channel, only the worst result of FM RX Low Channel was reported.
(4). By preliminary testing and verifying three axis (X, Y and Z) position of EUT transmitted status, it was found that “Z axis” position was the worst, and test data recorded in this report.
(5). Radiated emission test from 9kHz to 10th harmonic of fundamental was verified, and no emission found except system noise floor in 9kHz to 30MHz and not recorded in this report.

8. Photographs of test setup

Radiated Emission

Radiated Emission Above 1GHz

CE

End of report