Smart Cat Litter Box

User Manual

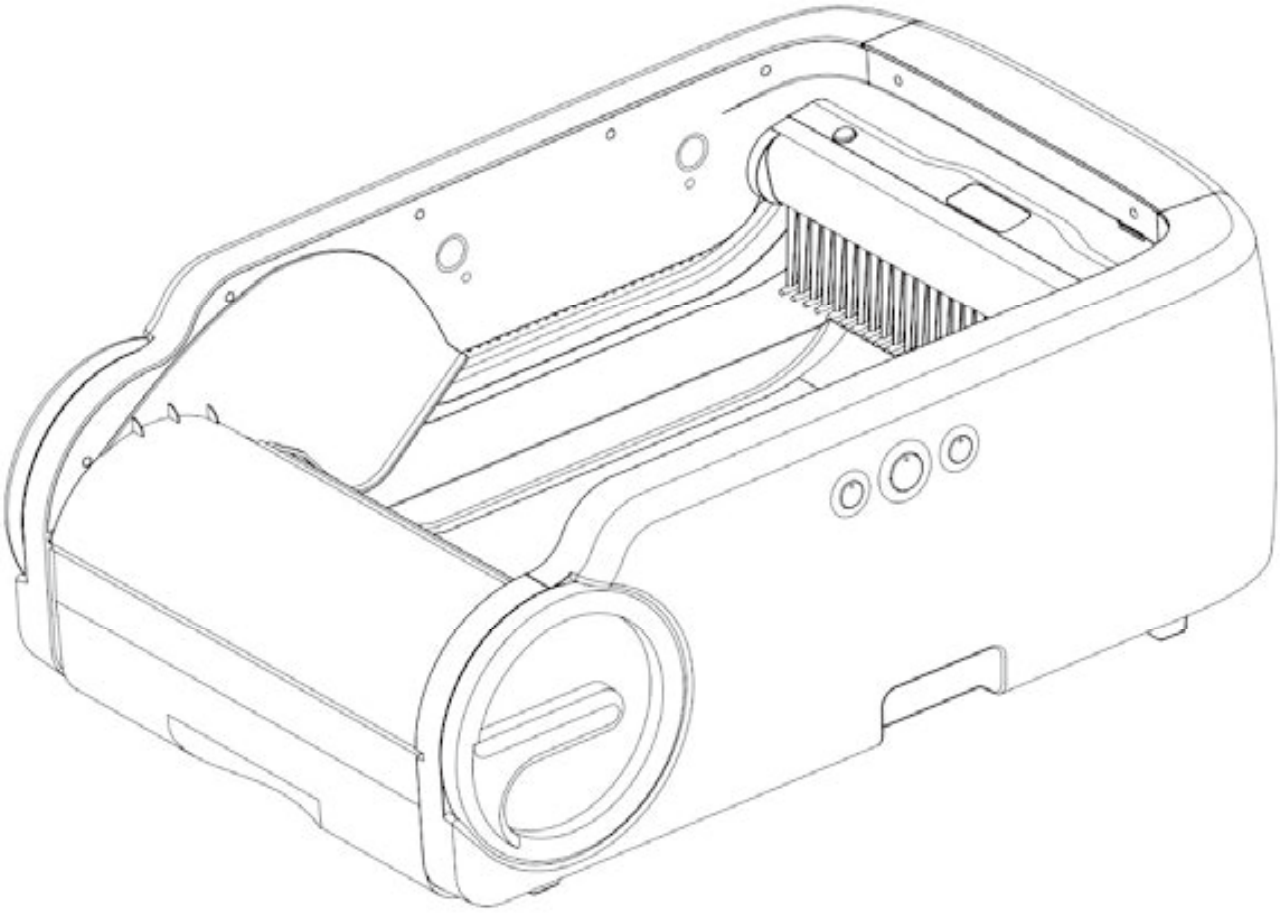

Table of Contents

I. Instructions for Initial Use

II. Connection of the APP

III. Button Indications

IV. Names of Product Components

V. Operation of Disassembling and Cleaning the Grinding Disc

VI. Display of Daily Functions

VII. More setting instructions

VIII. Equipment Cleaning

IX. Declaratory Matters

X. Main Specification Parameters

XI. Troubleshooting of Common Faults

XII. FAQ (Frequently Asked Questions)

XIII. Warranty Card

I. Instructions for Initial Use

1.1 Unboxing and Preparation before Use:

Open the bottom of the packaging box, then upright the product. Next, lift the outer packaging box vertically upwards. After that, separate the packaging foam and remove the protective plastic bag.

1.2 Placement of the Product :

After taking out the cat litter box, place it on a flat ground and confirm that all four feet of the product are in contact with the ground.

Do not place any items with a height exceeding 30CM within a range of 5CM on the right side of the product, so as to avoid squeezing the side buttons and causing limitations to the product's functions.

1.3 Packing list :

1 mainframe ; 1 power adapter; 1 roll of garbage bags; 1 cleaning brush; 1 instruction manual.

Note:

1.3.1 This product uses the special drawstring garbage bag, 57cm*32cm. You can buy it from your seller, or you can also buy this specification or larger size at local supermarkets.

1.3.2 The collection bucket is designed with a buckle for pulling out the drawstring of the garbage bag. Directly pulling it can make the garbage bag close automatically (the self-closing function cannot be used for non-special garbage bags). You can also open the drawer of the collection bucket to check and clean it.

1.4 Adding Cat Litter ⚠

1.4.1 Do not turn on the machine before no installing the bottom sand tray.

1.4.2 Cat litter should not exceed the MAX line and should not be lower than the MIN line. Otherwise, the machine can not work properly or effectively.

1.5 Types of Cat Litter

This product is only suitable for high - quality clumping granular cat litters. Cat litters made of cassava, bentonite, natural ore, etc. are recommended. Do not use long - strip or column - shaped cat litters, as they may cause overly large clumps and waste the cat litter.

1.6 Other Precautions

1.6.1 When the height of a kitten is less than 170mm (weight less than 1kg), the machine should be switched to manual mode (i.e., click the button to start the manual cleaning mode after the cat has finished using the toilet), and the child lock function should be enabled at the same time.

1.6.2 When using this product, the motor will start automatically without warning. Keep hands, clothes, and children away from the machine. Please read the instruction manual before use. When storing the product, it should also be kept out of reach of infants, young children, and people with mental illnesses.

II. Connection of the APP

2.1 Search for "Tu ya" in the app store to download and install the program.

2.2 Use of the APP

2.2.1 Functions of the Buttons

There are three buttons available on the device, namely: the network configuration button, the one-click cleaning button, and the power on/off button.

2.2.2 Open the phone settings, confirm that the phone is connected to the 2.4 - band wifi, and turn on the phone's Bluetooth and location services to ensure a fast network configuration.

2.2.3 Press the network configuration button for 3 seconds (it needs to be long - pressed when using the device for the first time). The backlight of the network configuration button will flash red, and the device will enter the network configuration state. Open the Tuya App, and the device can be scanned. Then, connect and configure the 2.4G wifi through the App.

2.2.4 Open the "+" sign in the upper - right corner of the app and click "Add Device".

2.2.5 Wait for a moment, and the app will recognize the presence of the product. Follow the instructions to continue to the next step or let it be automatically recognized. Enter the wifi password and proceed to the next step, and the device will start to connect.

2.2.6 Once the device is successfully connected, the network configuration button will stay on (in green color), and you can perform functional control operations through the APP.

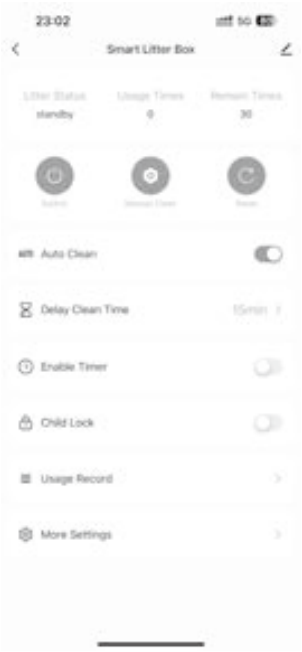

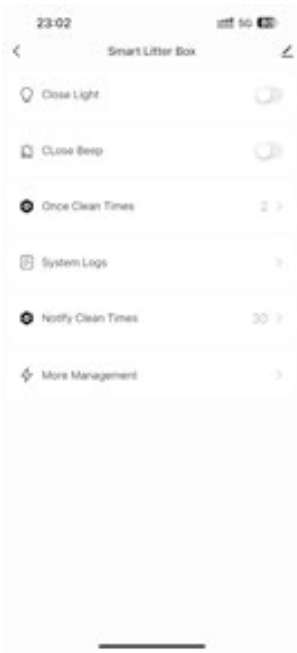

2.3 Troubleshooting for Network Configuration Failure

2.3.1 Check if the Wi - Fi has a 2.4G band, and make sure the phone is connected to the 2.4G - band Wi - Fi network. The product cannot recognize the 5G - band network.

2.3.2 Check if the phone has turned on the Wi - Fi, Bluetooth, and location.

2.3.3 Check if the product has entered the network configuration mode, and whether the indicator light

of the Wi - Fi (network configuration button) is flashing.

2.3.4 Check if other devices can use the network normally. Confirm whether it is a fault or shutdown of the wifi network at home

2.3.5 Confirm if the Wi - Fi password is correct in case..

2.3.6 If the Wi - Fi signal is too weak, move the machine close to the router for connection.

2.3.7 If the router is connected to many wireless devices or has a limit on the number of connected devices, it may lead to IP address conflicts.

III. Button Instructions

3.1 Power On/Off Button

	Power on	Green light stays on	Press and hold for 3 seconds. The buzzer will emit a long beep, and the device will be powered on.
	Turn off	Red light stays on	Press and hold for 3 seconds. The buzzer will emit a long beep, and the device will be powered off.

3.2 One - Click Cleaning Button

	Standby	always off
	Running	Green light stays on
	Paused	Red light stays on
	Blocked rotation	Red light flashes

3.3 Network Configuration Button

	Network not configured	Red light flashes
	Network configuration in progress	Blue light stays on
	Network not configured	Green light flashes
	Network configuration in progress	Green light stays on

IV. Product Component Names

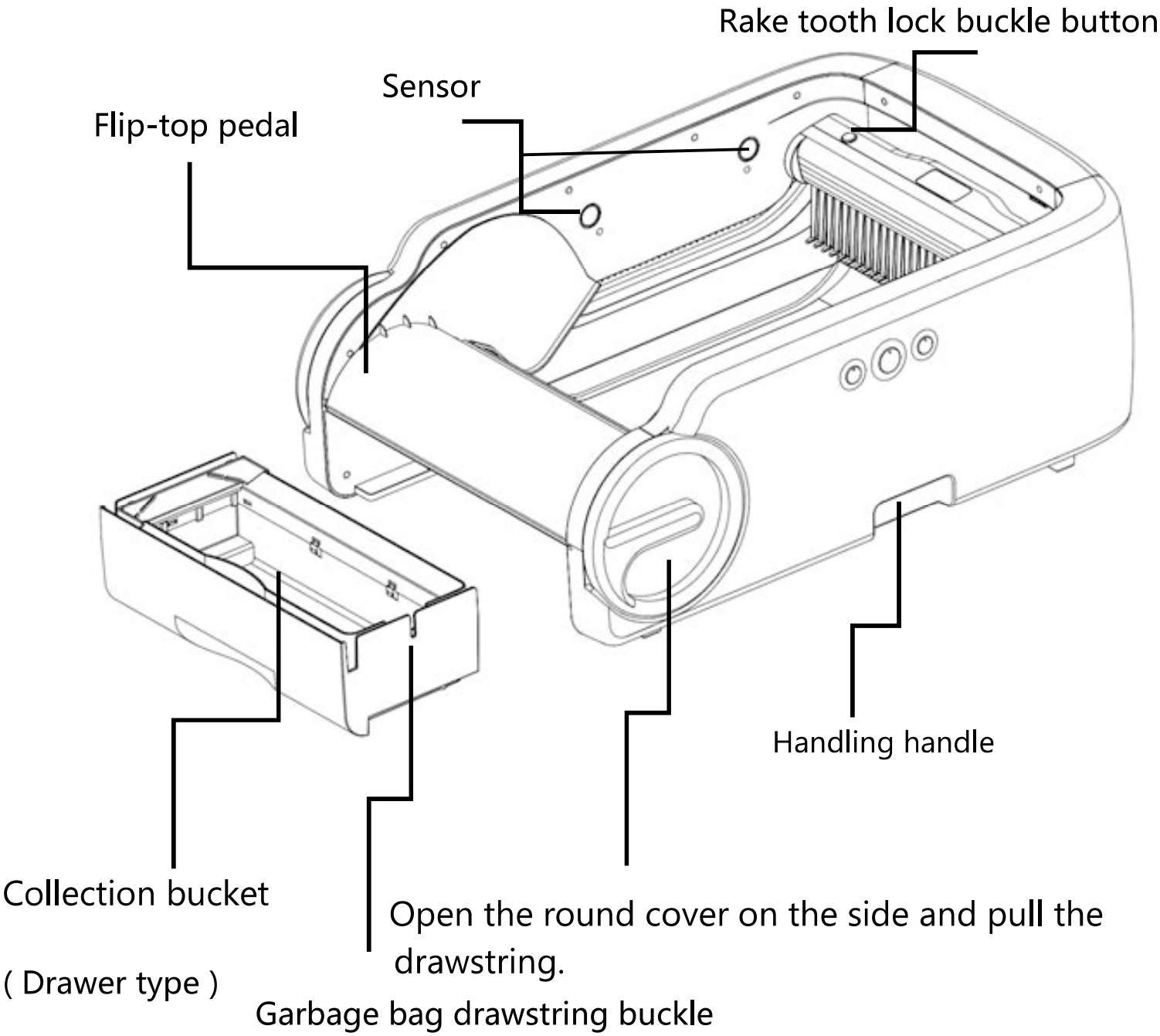

Collection bucket

The interior of the feces collection bin adopts a soft corner edge design. This makes it convenient to put on a drawstring garbage bag. Then, through a one-click extraction operation, the bag opening can be quickly tightened, enabling the rapid collection of garbage

V. Operation of Sand Disc Disassembling and Cleaning

5.1. Before dismantling the sand disc, please power off the machine at first. There is a drawer handle at the tail of the machine. Pull it outwards, and then lift the tail of the machine upwards (try to lift it as high as possible). The sand disc will fall downwards. Take out the sand disc along with this motion.

5.2. After the cleaning is completed, assemble the sand disc back into the machine. If it has not been installed properly, do not power on and turn on the machine.

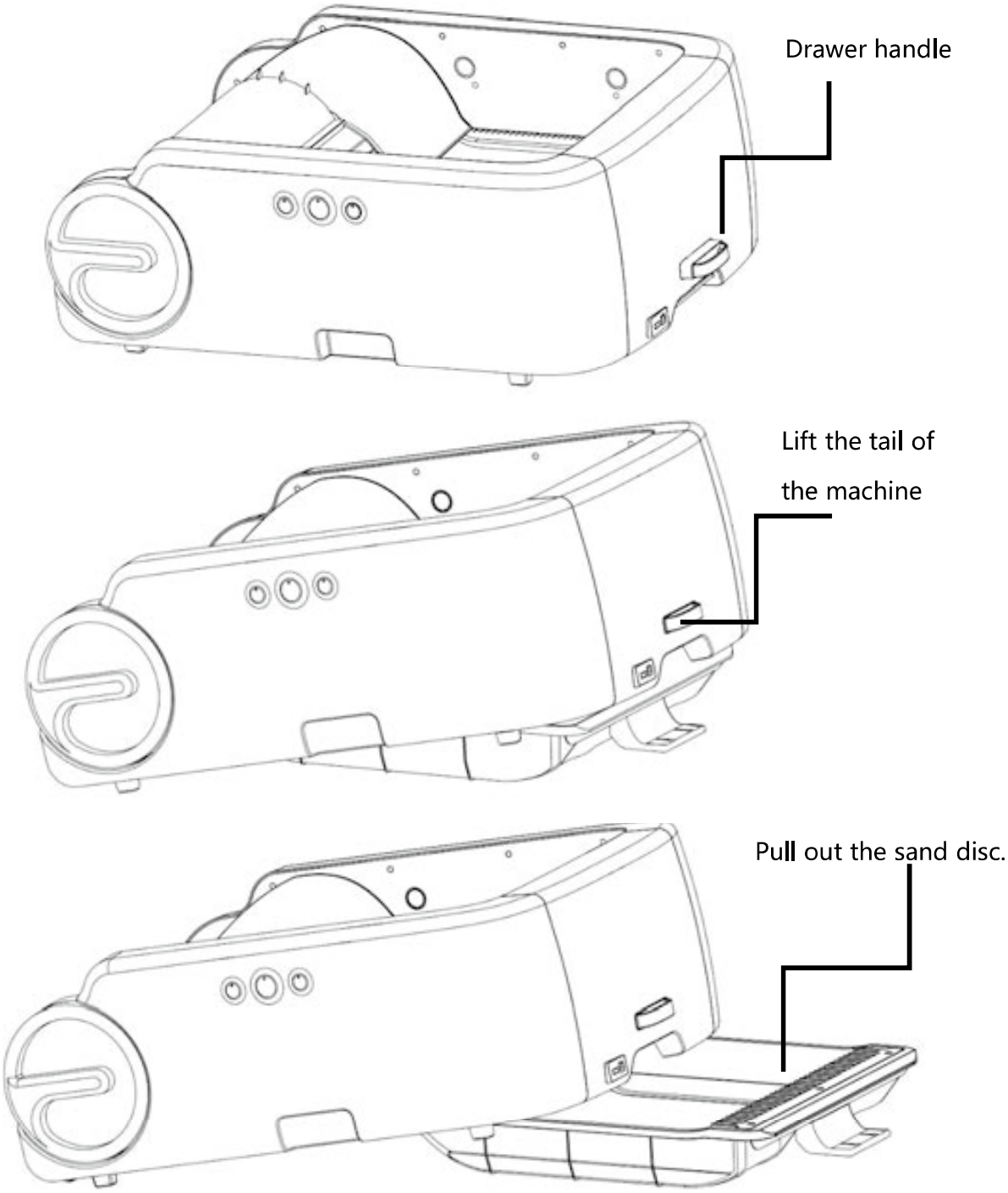

Simple operation principle

A、After the cat enters the toilet, it can be manually cleaned through induction or set for cleaning via the APP.

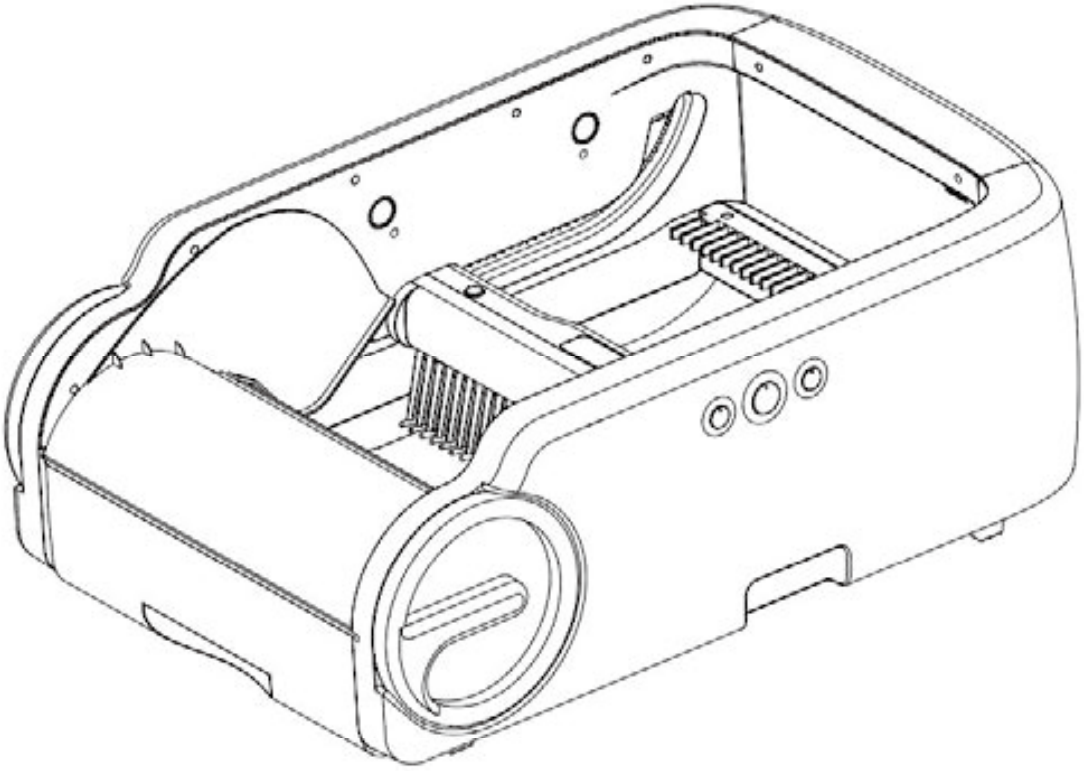

B、The device pushes the clumped garbage into the collection bucket, and then returns to its original position, thus completing one cleaning cycle.

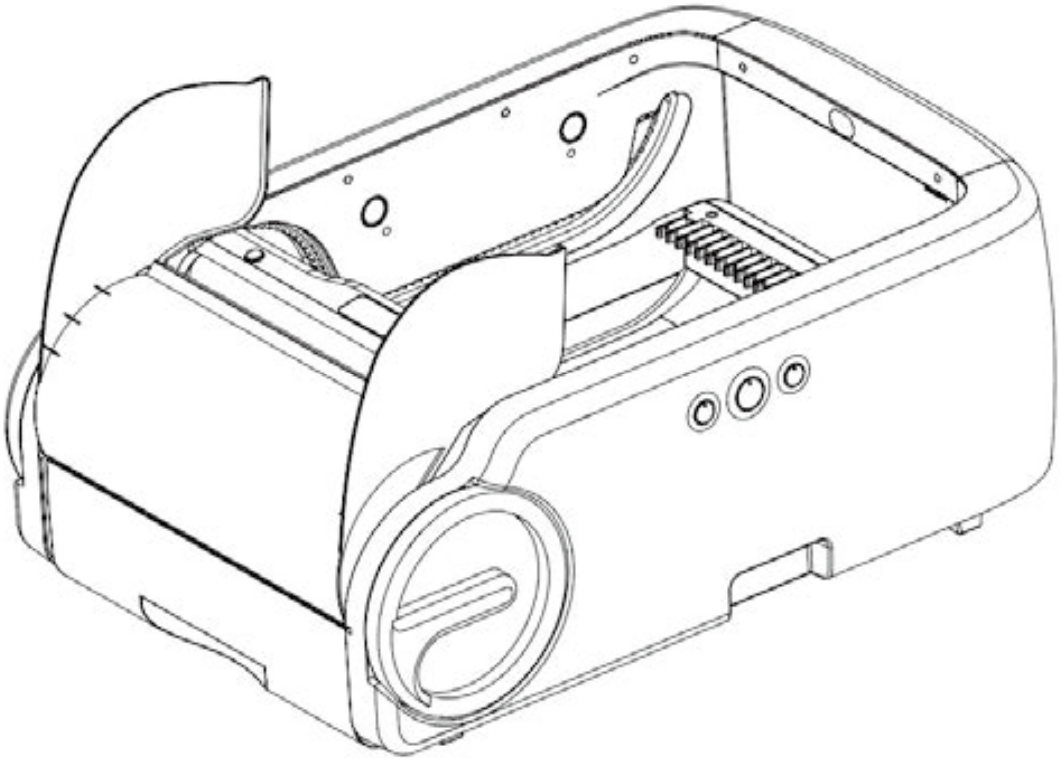

C、Open the blue round cover on the side, pull the drawstring, and tighten the seal of the garbage bag.

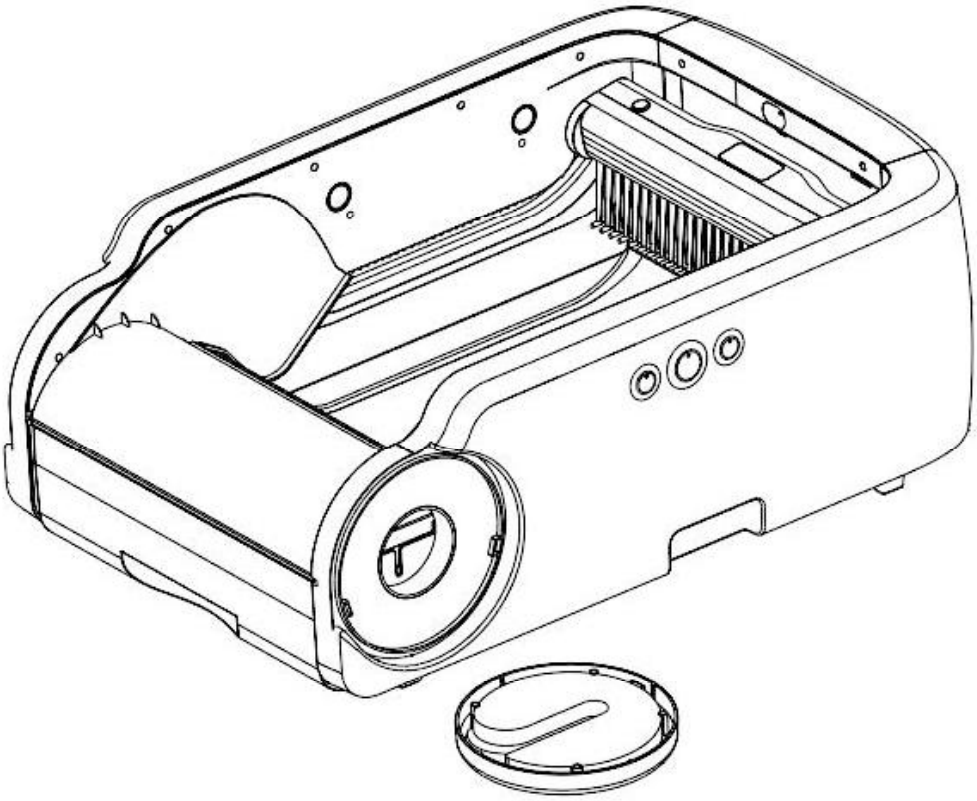

D、Open the drawer handle at the front, pull out t the collection bucket, and clean it once it is full.

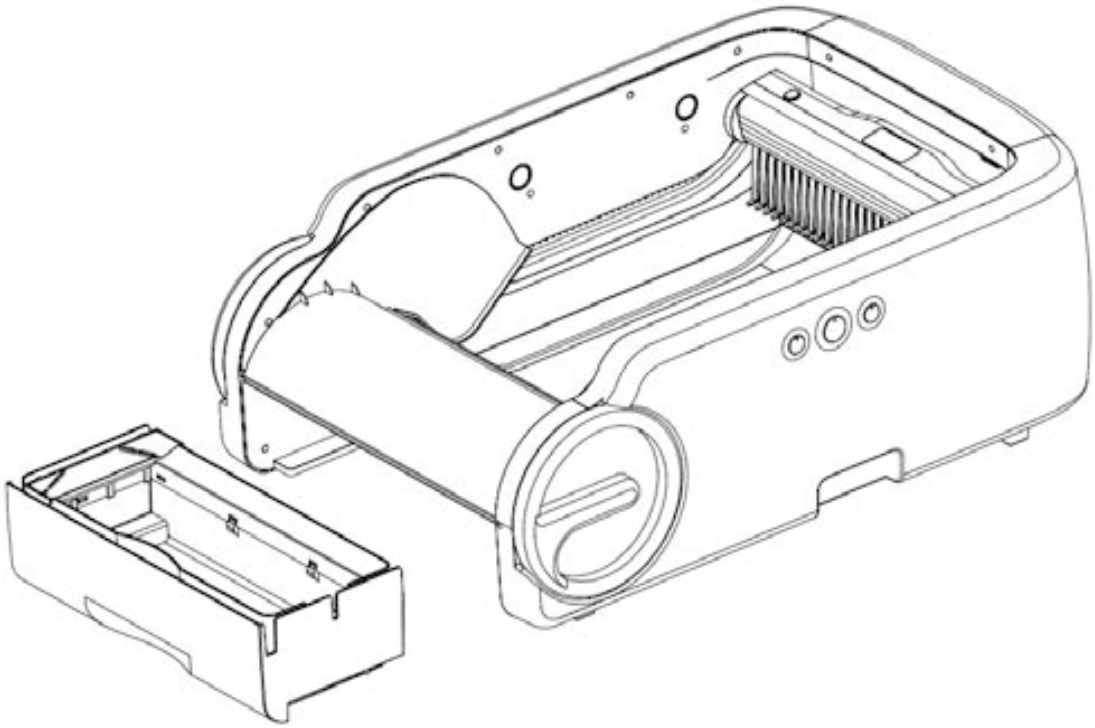

VI. Daily Function Description

6.1 Forward Cleaning During Machine Operation

6.1.1 When the device starts the cleaning process, the motor begins to run (in the forward direction). There are two sets of infrared sensors on the left and right sides. During the operation of the motor, if any one set of the infrared sensors is occluded, the motor will pause.

6.1.2 After waiting for 30 seconds after the occlusion removed, the operation will continue, and the cleaning light will be on in green constantly.

6.1.3 If the occlusion appears again within 30 seconds, after the occlusion is removed, it will wait for another 30 seconds before running again. If the occlusion lasts for more than 5 seconds, it is necessary to wait for the set waiting time for automatic cleaning. During the waiting process, the cleaning button will flash green.

6.1.4 During the cleaning process of the device, if the dirt is stuck to the bottom and difficult to remove, or the weight of the garbage exceeds the rated torque value that the device can bear, the rake will stop running, the cleaning will be suspended, the cleaning button will flash red, and at the same time, the APP pops up a warning window. It is necessary to remove the blockage manually, and press the reset button to return to the default position (or the secret code).

6.2 Machine Reversing Operation

6.2.1 When the machine runs to the limit position of the collection bucket and triggers the front Hall sensor, the cleaning light will be on in blue constantly.

6.2.2 When the machine moves backward (in reverse), if any one set of the infrared sensors on the left and right sides is occluded, the motor will pause, the cleaning light will be on in red constantly, and it will continue to run 30 seconds after the occlusion is removed.

6.2.3 If the infrared trigger lasts for more than 5 seconds, it is necessary to wait for the set waiting time for automatic cleaning .

6.3 Completion

When the motor runs to the initial position and triggers the rear Hall sensor, the motor stops, a cleaning cycle is completed, and the cleaning light goes out.

6.4 Automatic Cleaning

The device has the automatic cleaning function enabled by default. If you need to cancel it, operate and set on the App.

6.5 Triggered Cleaning Timing

When the device is in an idle state, if any one set of infrared sensors is continuously occluded for more than 5 seconds, the cleaning light will flash yellow continuously. After the occlusion is removed, the automatic cleaning will start counting down according to the set time. If the infrared occlusion occurs again during the timing process, the timing will start over.

6.6 Operation: After the waiting time for automatic cleaning is up, the cleaning process will be executed immediately.

6.7 Interruption and Resumption

6.7.1 If there is an occlusion during the waiting process, the waiting timing will be reset.

6.7.2 During the timing waiting process, if the cleaning operation is executed, the automatic cleaning process will be canceled.

6.8 Reset

6.8.1 When the device is in an idle state, click the reset button on the APP, or enter the secret code (long press the power-on button and the cleaning button simultaneously for 3 seconds). The rake will move backward. When it reaches the default rear position, the motor stops and the reset process is exited.

6.8.2 When the device is in a working state, you must first click the cleaning button (on the APP or the physical button) to make the device stop working, and then click the reset button on the APP or enter the secret code (long press the power-on button and the cleaning button simultaneously for 3 seconds). The rake will move backward. When it reaches the default rear position, the machine stops running and the reset process is exited.

6.8.3 During the reset process, if the infrared detects a signal, the reset will be suspended. You need to click the reset button on the APP again to start the reset or wait for 30 seconds.

6.9 Forced Restoration

When the device is powered on, click the forced restoration button on the APP. All the set data will be restored to the factory settings, and the device will enter the reset and backward movement process.

VII. More setting instructions

7.1. Turn off the lights

Turn off the button prompt light.

7.2. Turn off the buzzer

Turn off operation sounds, such as "drop" sounds.

7.3. Set the number of times of a single cleaning

How many cleaning cycles are needed for a defecation, the user can set it according to the cat litter breed and the use habits of the pet, the default is 2 times, and the maximum can be set 5 times.

7.4. Set the number of times the toilet is used

According to the actual living habits of pets, the user sets a toilet cleaning reminder, and every time the toilet is cleared, the remaining number of toilet on the APP homepage will be reduced by 1 time, until 0 time will be sent out to clean up the reminder. After each change of garbage bag, it needs to be set manually, and the default is 30 times.

7.5, Child - lock

After the child - lock is opened, all buttons are locked, that is, all buttons' functions are invalid.

7.6. The number of times it has been used

This number is reset to zero every time that the power is off, which is convenient for users to clean and maintain the equipment regularly.

7.7. Use Records

Record the pet's daily toilet habits and status, which is invalid for multi-pet families and cannot accurately identify which cat is was.

VIII. Device Cleaning

8.1 Cleaning of the Sand Disc and Changing of the Cat Litter: Refer to the description in Article 4 for details and operate strictly according to the requirements.

8.2 The sensor area should be wiped frequently to prevent dust and dirt from covering the sensor head and causing it to malfunction. Avoid any debris blocking the target teeth in the track groove, and use a cleaning brush to clean it.

8.3 When the machine shell and other surfaces need to be cleaned, please power off and unplug the power adapter. Wipe with a clean, soft, slightly wet cloth soaked in a cleaning agent, and prevent the liquid from seeping into the machine.

8.4 There is a circuit board inside the product, and it is prohibited for liquid to seep in.

8.5 To maintain the machine clean, the collection bucket,, the collection bucket, sand disc and cleaning rake teeth should be frequently disassembled and washed. They can be reinstalled for use only after being dried or air-dried.

8.6 Disassembly of the Cleaning Rake Teeth: Press the lock buckle button with both hands' fingers simultaneously (or on one side first), and take out the target teeth from the front side. Refer to the indication of the lock buckle button in Article 3 for details.

8.7 To ensure environmental cleanliness and the pets' health, it is recommended to replace the garbage bag in a timely manner according to the Qty of cats and the surrounding temperature.

IV. Declaration Items

*Failure to comply with the following clauses may result in the product being unable to be used normally or other accidental losses.

9.1 Please install and use this device strictly according to the instructions.

9.2 Please use it in an indoor environment. Do not place it in a place directly exposed to sunlight, and keep it away from a fire source.

9.3 When moving the device, do not drag or place it roughly to avoid damaging the device.

9.4 The main body part of this device is strictly prohibited from being soaked in water.

9.5 When moving, cleaning the device or not using it for a long time, please unplug it.

9.6 Please use the original power adapter to avoid damaging the device or causing potential safety hazards.

9.7 Please maintenance under the guidance of a professional, and do not disassemble it by yourself. If you have any problems during using of the product, please contact the customer service in a timely.

X. Main Specification Parameters

Product Name: Smart Cat Litter Box	Cleaning Time Setting: 1 to 120 minutes
Operating Noise: < 45 decibels (dB)	Rated Voltage: DC12 V
Rated Power: 6 W	Power Adapter: Input AC100-240 V
Standby Power: ≤ 0.5 W	Product Dimensions: 74 × 47.2 × 26 cm
Cat Litter Loading Capacity: 5.8 L	Net Weight: 7.3 KG
Collection Bucket Capacity: 6.5 L	Wi-Fi Band: 2.4GHz (5GHz band is not supported)
Normal Working Environment: Ambient temperature ranges from 5℃ to 40℃, relative humidity is less than 93%, and there is no condensation.	Storage and Transportation Environment: Ambient temperature ranges from -20℃ to 60℃, relative humidity is less than 93%, and there is no condensation.
Implementation Standard: GB 4706.1 - 2005	

XI. Common Fault Troubleshooting

11.1 After turning on the device, you can touch each button separately to check if the buttons are working properly. If they are working properly, it indicates that the hardware is working properly.

11.2 If the Wi-Fi light symbol is constantly on, it means that the Wi-Fi hardware is working properly.

11.3 When the machine is running and the area in front of the infrared sensor is occluded, and the machine stops, it indicates that the infrared sensor is working properly.

11.4 If the cat litter box does not clean automatically, it may be that the APP interface has been accidentally switched to the manual cleaning mode.

XII. FAQ (Frequently Asked Questions)

Q: Why can't my litter box filter out the clean cat litter?

A: Refer to Article 1.5 in Point 1 of the instruction manual. Check whether the type of cat litter being used is compatible. Cat litter particles that are too long are not suitable.

Q: Why does it clean automatically after being powered on? I haven't made any settings.

A: Because the device is powered off every time and then powered on again, it will perform an automatic detection and return to the initial position, which takes approximately 1 minute. After the self-check is completed, if you need to set other modes, you can adjust them by yourself.

Q: Why does it take a long time for the device to clean?

A: This product adopts a special design structure. Running at a low speed can reduce the operation noise and save the use of cat litter. It takes about 2 minutes to complete a standard cleaning operation. At the same time, if the cat is overly curious about the device and enters to observe it, interrupting the operation of the device, it may also cause the cleaning time to be prolonged. Running at a lower speed can reduce the resistance of some timid cats.

Q: Why can't the garbage enter the feces collection bin during cleaning?

A: It may be due to the fact that the door of the feces collection bin is blocked by cat litter or the wrinkles of the garbage bag, or the garbage is too large to pass through. Please check whether the door of the feces collection bin can be fully opened and opened and closed smoothly. It is recommended to conduct an inspection once after installing a new garbage bag each time.

Q: Why is clean cat litter poured into the feces collection bin during cleaning?

A: Please add cat litter according to the "Max" and "Min" cat litter marking lines on the side inside the machine. Do not exceed the "Max" line to avoid cat litter waste, and do not go below the "Min" line to avoid the situation where the cat litter sticks to the bottom and causes incomplete cleaning.

Q: Why doesn't the machine respond after the function instructions on the APP operation software?

A: There will be a delay of 1-2 seconds for the APP to convey the instruction to the machine. You can wait for a moment. Do not trigger multiple instructions at the same time.

Q: How often should the feces collection bin be replaced when it is full?

A: Normally, it is 7-10 days. For households with multiple cats, it is recommended to replace the garbage bag in a timely manner according to the number of cats and the surrounding temperature.

XIII. Warranty Card (to be filled in by the user)

Product Name		Product Model	
Date of Purchase		Product Serial Number	
User's Name		Telephone Number	
User's Address			
Reason for Return/Exchange or Fault Description:			
Maintenance Records			

FCC Statement

This device complies with part 15 of the FCC Rules. Operation is subject to the following two conditions: (1) This device may not cause harmful interference, and (2) this device must accept any interference received, including interference that may cause undesired operation.

Note: This equipment has been tested and found to comply with the limits for a Class B digital device, pursuant to part 15 of the FCC Rules. These limits are designed to provide reasonable protection against harmful interference in a residential installation. This equipment generates, uses and can radiate radio frequency energy and, if not installed and used in accordance with the instructions, may cause harmful interference to radio communications. However, there is no guarantee that interference will not occur in a particular installation. If this equipment does cause harmful interference to radio or television reception, which can be determined by turning the equipment off and on, the user is encouraged to try to correct the interference by one or more of the following measures:

—Reorient or relocate the receiving antenna.

—Increase the separation between the equipment and receiver.

—Connect the equipment into an outlet on a circuit different from that to which the receiver is connected.

—Consult the dealer or an experienced radio/TV technician for help.

Note: The Grantee is not responsible for any changes or modifications not expressly approved by the party responsible for compliance. such modifications could void the user's authority to operate the equipment.

The device has been evaluated to meet general RF exposure requirement.
To maintain compliance with FCC's RF exposure guidelines, the distance must be at least 20 cm between the radiator and your body, and fully supported by the operating and installation configurations of the transmitter and its antenna(s).