Portable Bluetooth Printer

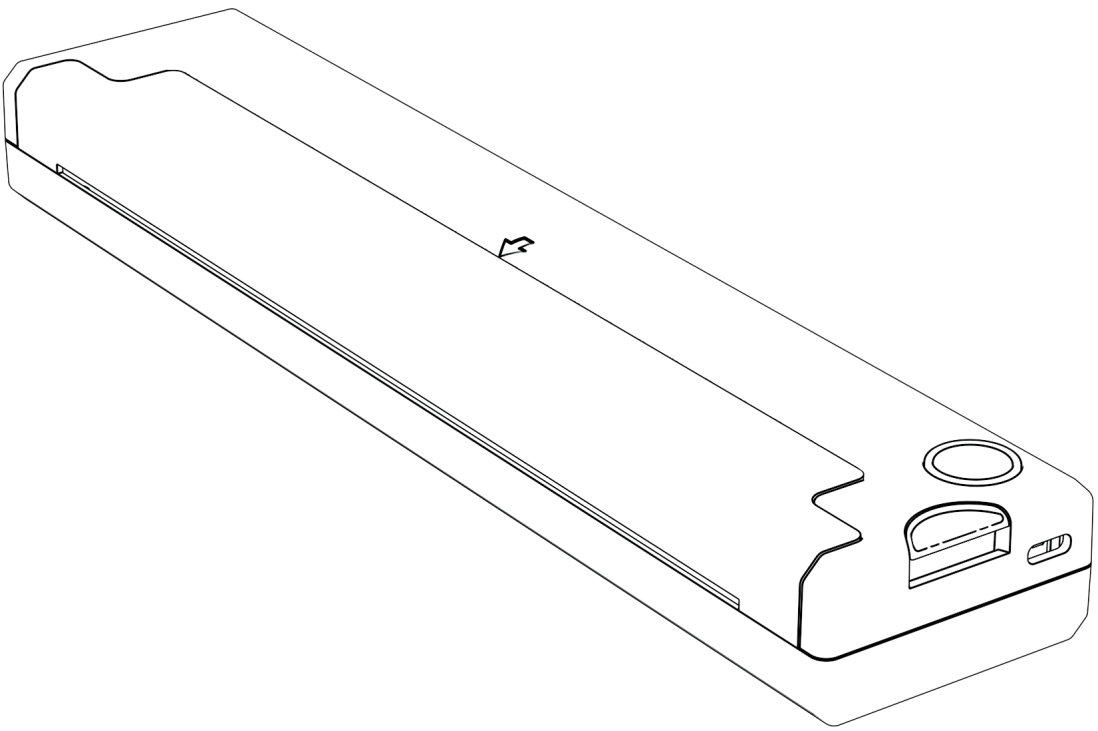

Instruction Manual

1. Product information

Product name	Portable Bluetooth Printer
Product number	A41
Product weight	475g
Product size	265mm*58mm*30mm
Print type	Thermal printing
Input voltage	DC 5V/2A
Battery capacity	2000mah(7.4V)
Automatic shut-down	30min
Standby time	About 30 days
Charging time	About 1.30H
Continuous printing	90 sheets of tattoo printing paper
Paper width specifications	210mm or 218mm
Charging port	Type-C

2. Product structure

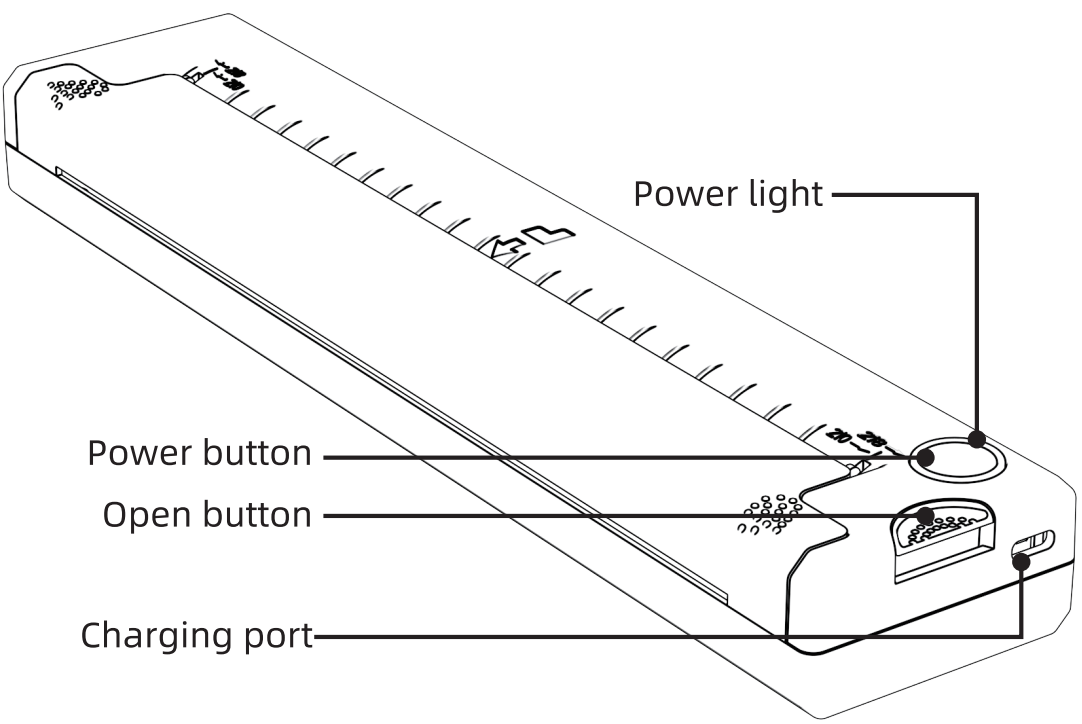

3. Product packing list

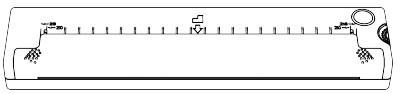

Printer host*1

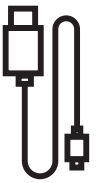

Power data cable*1

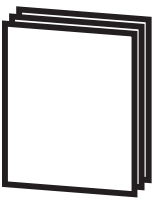

Manual*1

4. Application installation

APP download method

① Apple users: In the AppStore, search for [iPrint] to download the APP;

② Android users: Search for [iPrint] in each app store to download the APP.

DOWNLOAD APP(IOS)

DOWNLOAD APP(Android)

5. Switch machine

Power on: Press and hold the power button for 2S until the indicator light is on.

Shutdown: Press and hold the power button for 2S until the indicator light goes out.

6. Paper feeding operation

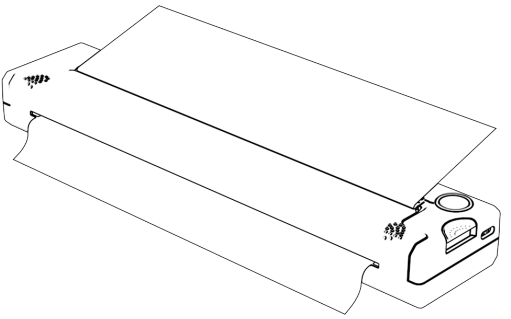

Direction identification of tattoo printing paper

※ Put the yellow side up and the white side down into the input port of the printer neatly, and the printing paper will be sucked in automatically.

7. Paper jam, abnormal handling and cleaning

As shown in the figure: press the cover opening button to open the flip cover assembly and rotate at a certain angle

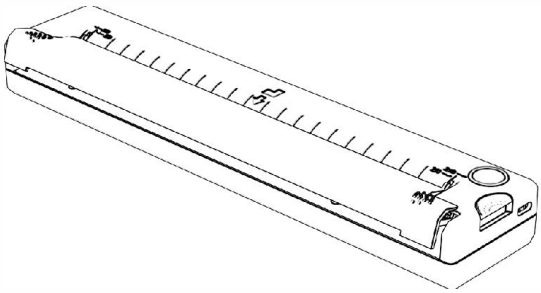

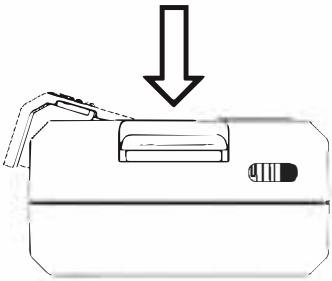

8. Connect application

After the device is turned on, open the APP, click the "Not Connected" button in the upper right corner, enter the "Add Device" list, click the device to connect to Bluetooth, and then print.

Tips: When connecting, please make sure that the Bluetooth of the mobile phone is turned on, and the device is close to the mobile phone.

9. Paper type

It is recommended to use special printing paper for tattoos. Non-special printing paper may not be environmentally friendly, cause paper jams or inaccurate reading of paper feeding, and easily cause printing to be skewed.

10. Frequently Asked Questions

Q: When the APP adds a device, no connectable device is found?
A: Please check whether the device is turned on to ensure that the Bluetooth is working.

Q: The device cannot print, what should I do?

A: ① Confirm whether the Bluetooth of the mobile phone is turned on, and rule out the possibility of others connecting to this device.
② Check if the tattoo printer is jammed.
③ Whether the print head is overheated, if it is overheated, please wait for the print head to cool down before trying to print.

Q: Why are all the printed pages blank with no content?

A: It may be caused by incorrect installation of the printing paper. Please refer to the introduction of replacing the printing paper to reinstall it.

Q: Why is the printed word faded?

A: ① Please check if the device is low on battery.
② Check if the print head is full of dirt, please wipe it gently with a cloth dampened with alcohol.

11. Safety and Precautions

- Do not charge or use the printer in high temperature, humid or dusty places.
- Please use 5V 2A input to charge, you can use mobile phone power adapter to charge.
- After printing, do not touch the print head directly to prevent overheating and scalding.
- Please insert or pull out the charging cable gently to avoid damage to the interface due to excessive force.
- Improper charging may cause print head damage.
- Unplug the charging cable in time after charging is completed.
- Place the machine on a firm and stable level to prevent the machine from slipping and being damaged.
- When not using the machine for a long time, please turn off the power of the machine.
- Prevent foreign matter from entering the machine, so as not to cause malfunction or otherrisks.

FCC Caution.

(1)§ 15.19 Labelling requirements.

This device complies with part 15 of the FCC Rules. Operation is subject to the following two conditions: (1) This device may not cause harmful interference, and (2) this device must accept any interference received, including interference that may cause undesired operation.

§ 15.21 Changes or modification warning

Any Changes or modifications not expressly approved by the party responsible for compliance could void the user's authority to operate the equipment.

§ 15.105 Information to the user.

Note: This equipment has been tested and found to comply with the limits for a Class B digital device, pursuant to part 15 of the FCC Rules. These limits are designed to provide reasonable protection against harmful interference in a residential installation. This equipment generates uses and can radiate radio frequency energy and, if not installed and used in accordance with the instructions, may cause harmful interference to radio communications. However, there is no guarantee that interference will not occur in a particular installation. If this equipment does cause harmful interference to radio or television reception, which can be determined by turning the equipment off and on, the user is encouraged to try to correct the interference by one or more of

the following measures:

-Reorient or relocate the receiving antenna.

-Increase the separation between the equipment and receiver.

-Connect the equipment into an outlet on a circuit different from that to which the receiver is connected.

-Consult the dealer or an experienced radio/TV technician for help.

RF warning for Mobile device:

This equipment complies with FCC radiation exposure limits set forth for an uncontrolled environment. This equipment should be installed and operated with minimum distance 20cm between the radiator & your body.