产品规格承认书

SPECIFICATIONS

客户:

CUSTOMER: _____

产品名称:

DESCRIPTION: PCB Antenna

客户型号:

CUSTOMER PART No: _____

产品型号:

OUR MODEL NO: **PCB 3216**

日期:

DATE: _____

确认签字,盖章后请返回承认书一份

PLEASERETRUV TO US ONE COPY OF “SPECIFICATION FOR APPROVAL”

WITY YOUR APPROVED SIGNATURES

Approved	LiuFei	Audit	LiuFei	Making	LiuXiaoMei

Customer Acknowledges Signature	
Date	

PCB 3216 Specification
Unit: mm

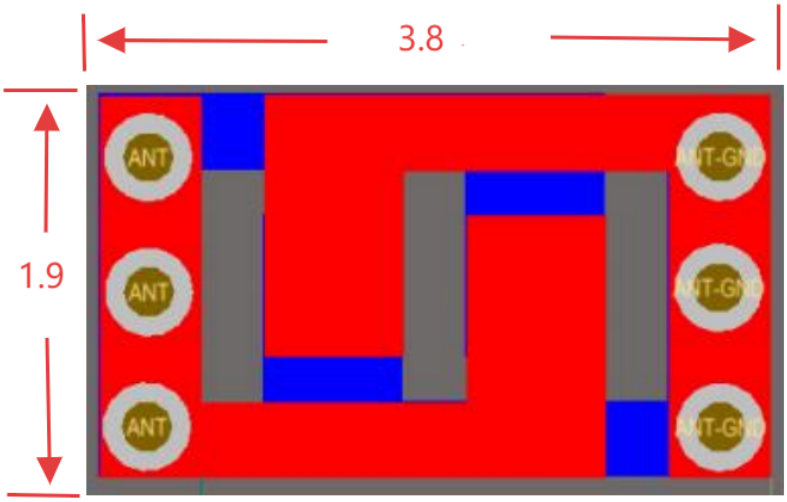

APPLICATION GUIDE

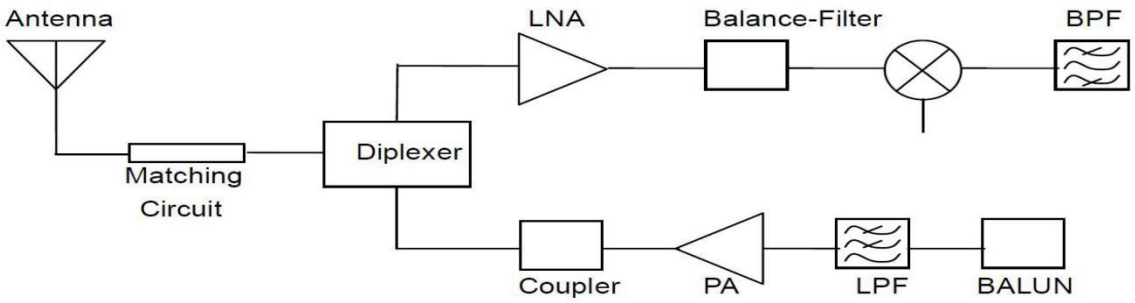

UNLESS OTHER SPECIFIED TOLERANCES ON: X=± X.X=± X.XX= ANGLES =± HOLEDIA =±		PengBanXingYeShenZhen Technology Co. , Ltd	
SCALE：N/A	UNIT：mm	THESE DRAWINGS AND SPECIFICATIONS ARE THE PROPERTY OF PBXY TECHNOLOGY Limited AND SHALL NOT BE REPRODUCED OR USED AS THE BASIS FOR THE MANUFACTURE OR SALE OF APPARATUS OR DEVICES WITHOUT PERMISSION	
DRAWN BY : Sera	CHECKED BY: XD		
DESIGNED BY: Sera	APPROVED BY: XD		
TITLE：CHIP2450-3216 Specification		DOCUMENT NO.	3216	SPEC REV. P1

1. SPECIFICATIONS:

No.	Product number	PCB 3216	
1	Central Frequency	2500	MHz
2	Bandwidth	100 (Min.)	MHz
3	Return Loss	-10.96 (Max.)	dB
4	Peak Gain	-1.2	dBi
5	Impedance	/	Ω
6	Operating Temperature	-40~+85	℃
7	Maximum Power	5	W
8	Resistance to soldering heat	10 (@260℃)	Sec.
9	Polarization	Linear	
10	Azimuth Beam width	Omni-directional	
11	Termination	Sn (leadless)	

2. Return LOSS :

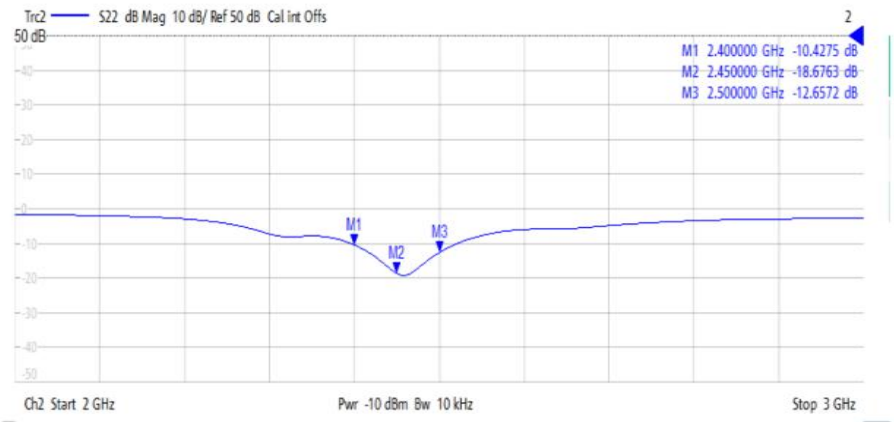

UNLESS OTHER SPECIFIED TOLERANCES ON: X=± X.X=± X.XX= ANGLES =± HOLEDIA =±		PengBanXingYeShenZhen Technology Co. , Ltd	
SCALE：N/A	UNIT：mm	THESE DRAWINGS AND SPECIFICATIONS ARE THE PROPERTY OF PBXY TECHNOLOGY Limited AND SHALL NOT BE REPRODUCED OR USED AS THE BASIS FOR THE MANUFACTURE OR SALE OF APPARATUS OR DEVICES WITHOUT PERMISSION	
DRAWN BY : Sera	CHECKED BY: XD		
DESIGNED BY: Sera	APPROVED BY: XD		
TITLE：CHIP2450-3216 Specification		DOCUMENT NO.	3216	SPEC REV. P1

3.2D Radiation Patterns

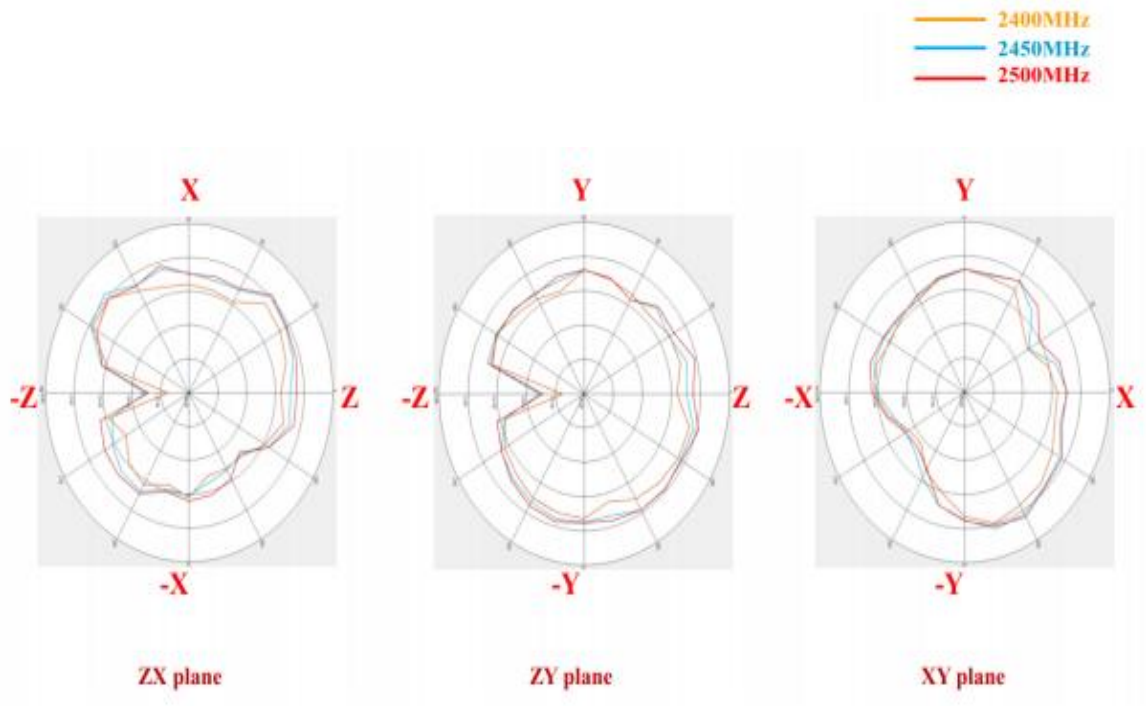

	XZ-Plane		YZ-Plane		XY-Plane	
Frequency [MHz]	Max. Value (dB)	Ave. Value (dB)	Max. Value (dB)	Ave. Value (dB)	Max. Value (dB)	Ave. Value (dB)
2400 MHz	-3.3	-9.21	-5.95	-9.87	-3.11	-9.52
2450 MHz	-1.79	-6.72	-5.68	-8.42	-1.77	-8.19
2500 MHz	-2.17	-6.63	-3.32	-8.02	-1.2	-7.83

THESE DRAWINGS AND SPECIFICATIONS ARE THE PROPERTY OF PBXY TECHNOLOGY Limited AND SHALL NOT BE REPRODUCED OR USED AS THE BASIS FOR THE MANUFACTURE OR SALE OF APPARATUS OR DEVICES WITHOUT PERMISSION

3D Radiation Pattern

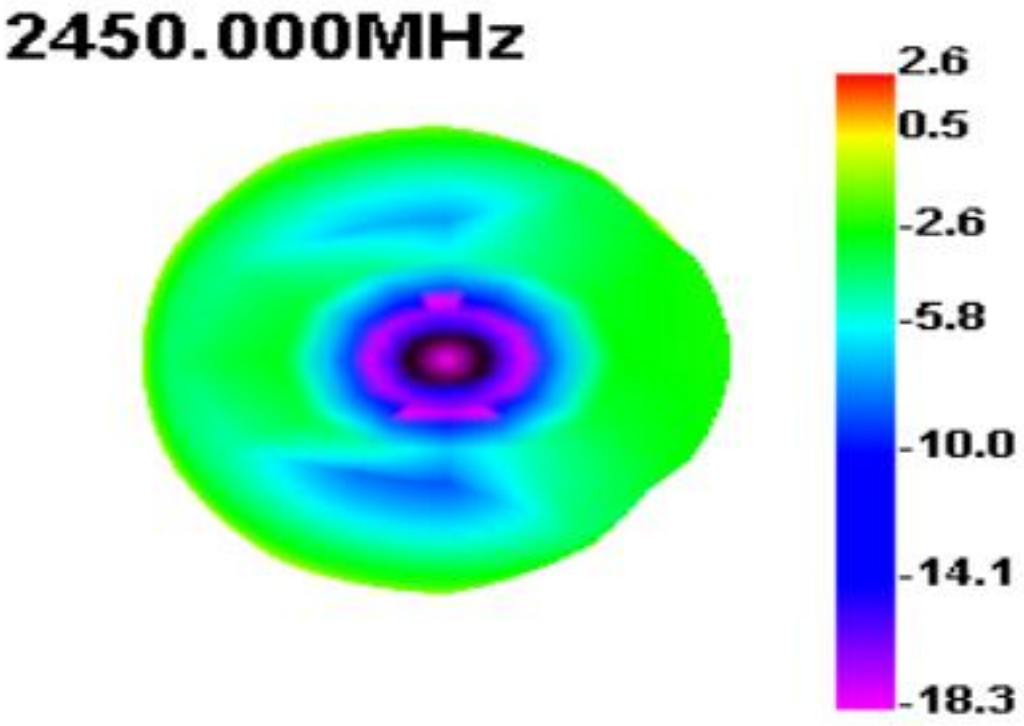

UNLESS OTHER SPECIFIED TOLERANCES ON: X=± X.X=± X.XX= ANGLES =± HOLEDIA =±		PengBanXingYeShenZhen Technology Co. , Ltd	
SCALE：N/A	UNIT：mm	THESE DRAWINGS AND SPECIFICATIONS ARE THE PROPERTY OF PBXY TECHNOLOGY Limited AND SHALL NOT BE REPRODUCED OR USED AS THE BASIS FOR THE MANUFACTURE OR SALE OF APPARATUS OR DEVICES WITHOUT PERMISSION	
DRAWN BY : Sera	CHECKED BY: XD		
DESIGNED BY: Sera	APPROVED BY: XD		
TITLE：CHIP2450-3216 Specification		DOCUMENT NO.	3216	SPEC REV. P1