Read all instructions **BEFORE** assembly and **USE** of product.

KEEP INSTRUCTIONS FOR FUTURE USE.

LullaGlide® Plus

3-in-1 Bassinet

IS0247E_03 02/25 ©2025 Artsana USA, Inc.

ChiccoUSA.com

Owner's Manual

⚠ WARNING

Failure to follow these warnings and the instructions could result in serious injury or death. For your child's safety, read the labels and owner's manual before using the product.

- PLEASE READ THESE INSTRUCTIONS CAREFULLY TO ENSURE THE SAFETY OF YOUR CHILD.
- ALWAYS PROVIDE THE SUPERVISION NECESSARY FOR THE CONTINUED SAFETY OF YOUR CHILD.
- SUFFOCATION HAZARD - Infants have suffocated:
- In gaps between extra padding and side of the bassinet, and
- On soft bedding.
- Use ONLY the pad provided by Chicco. Never add a pillow, comforter, or another mattress for padding.
- Product can roll over on soft surfaces and suffocate child. Never place product on beds, sofas, or other soft surfaces.
- If a sheet is used with the pad, use only a fitted sheet specifically designed to fit snug with at least 2" (5cm) under all sides of the pad.
- Strings and cords can cause strangulation! DO NOT place items with a string around child's neck such as hood strings, pacifier cords,etc.
- DO NOT suspend strings over the bassinet or attach strings to toys.
- DO NOT place the bassinet near a window where cords from blinds or drapes can strangle a child.
- FALL HAZARD - To help prevent falls, do not use this product when the infant begins to push up on hands and knees or has reached 20lbs (9kg), whichever comes first.

⚠ WARNING

Failure to follow these warnings and the instructions could result in serious injury or death. For your child's safety, read the labels and owner's manual before using the product.

- Always check that the bassinet is securely locked on the stand by pulling upwards on the bassinet.
- Always use product on the floor. Never use on an unintended elevated surface.
- DO NOT carry bassinet with child in it.
- Be sure all sides are locked in position whenever child is in product.
- Before use, remove and dispose of all plastic bags and packaging materials and keep them out of reach of children.
- Do not use accessories, spare parts, or any component not supplied or approved by Chicco as they may make the bassinet unsafe.
- Keep bassinet away from stoves, heaters, fireplaces and other hazards which can cause injury to your child.
- To reduce the risk of SIDS (Sudden Infant Death Syndrome), pediatricians recommend healthy infants be placed on their back to sleep unless otherwise advised by your physician.
- DO NOT place more than one child in bassinet.
- Never use this product if there are any loose or missing fasteners, loose joints, broken parts, or torn mesh/ fabric. Check periodically during use. Contact Chicco for replacement parts and instruction if needed. Never substitute parts.

Components

A.

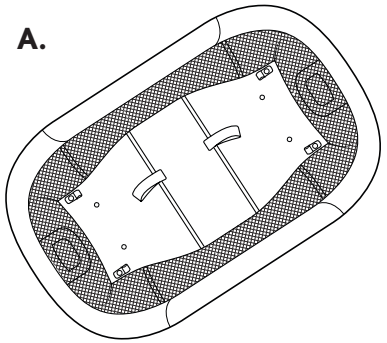

A. Bassinet

B.

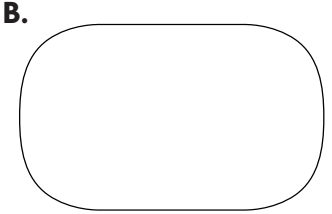

B. Mattress Pad
with Fitted Sheet

C.

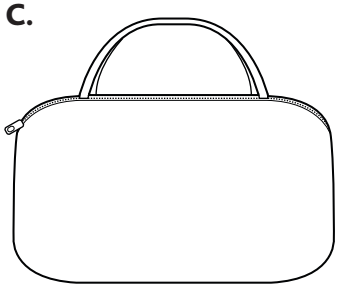

C. Carry Bag

D.

D. Power Cord

Components

E.

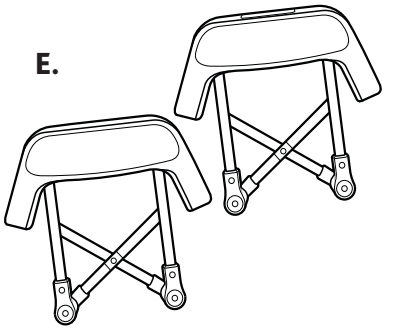

E. Leg Hubs

F.

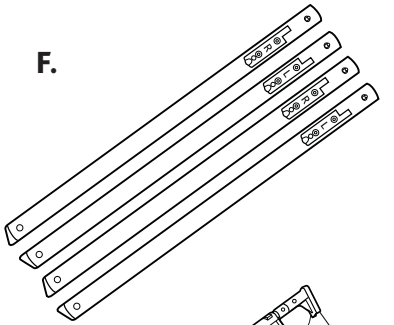

F. Legs

G.

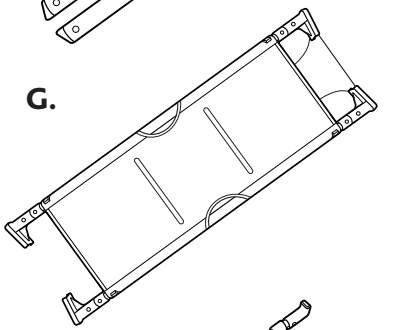

G. Support Shelf
with organizer

H.

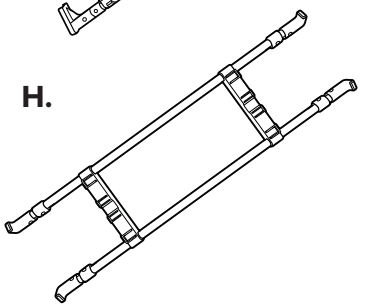

H. Attachment Frame
(Ships connected to bottom of Bassinet)

Bassinet Assembly

1A

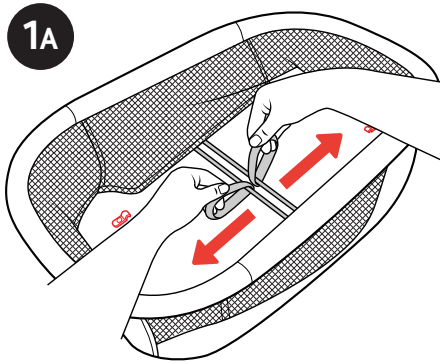

1A. Locate both pull straps on the Extender Bars inside the Bassinet.

Pull out on both Pull Straps to lift up the sides of the Bassinet.

1B

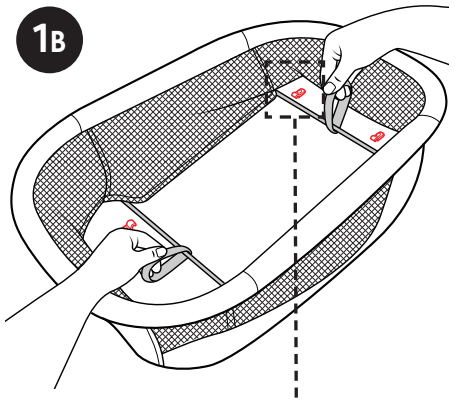

1B. Continue pulling on the Pull Straps until the Extender Bars lock into place under all four clips located on the bottom of the Bassinet, as shown.

Tip: *If having trouble securing the Extender Bar under the clips, the Pull Strap can be slid to either side of the Extender Bar allowing you to secure one clip at a time.*

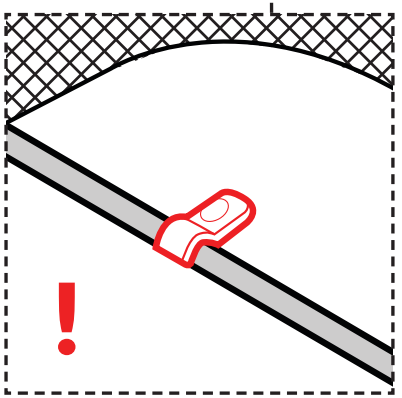

! Double check that **ALL FOUR CLIPS** are secured over the Extender Bars.

Bassinet Assembly

2

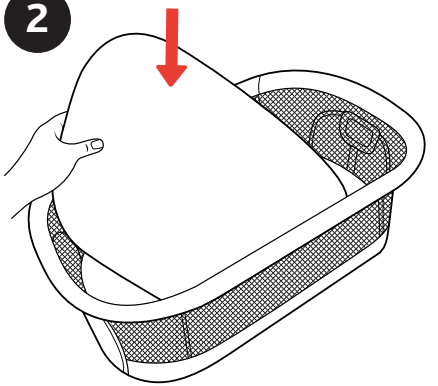

2. Check that the Fitted Sheet is properly installed on the Mattress Pad.

Then place the Mattress Pad into the Bassinet and press it down flat against the bottom of the Bassinet.

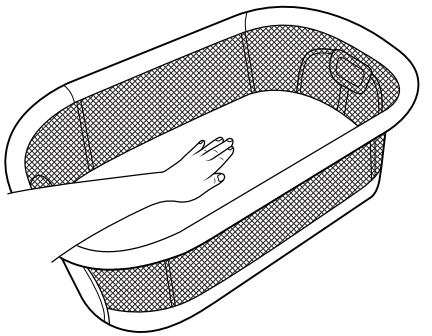

Note: *One side of the Mattress Pad has a layer of rigid plastic under the waterproof material. The rigid plastic layer goes against the bottom of the Bassinet.*

Bassinet Assembly

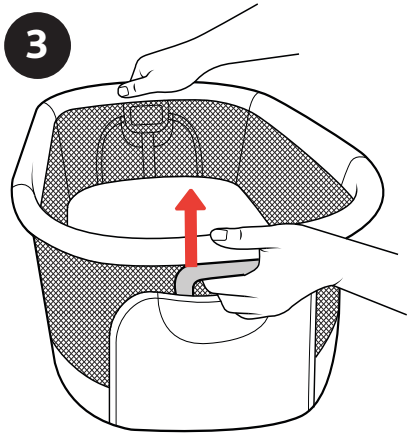

3. Pull up on both of the Release Handles to remove the Attachment Frame from the Bassinet.

Set both aside.

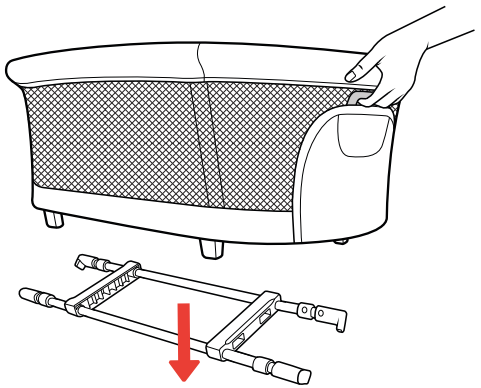

Stand Assembly

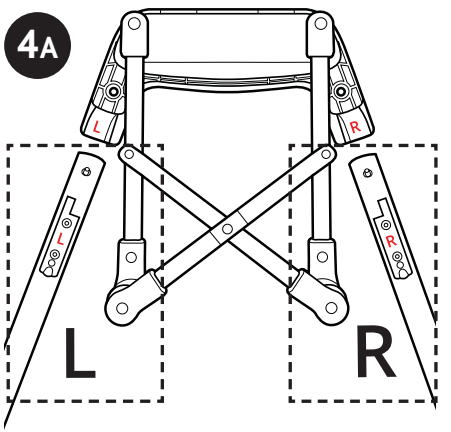

4A. Lay down one of the Leg Hubs and match up a left **(L)** and a right **(R)** Leg to the corresponding letters on the Leg Hub.

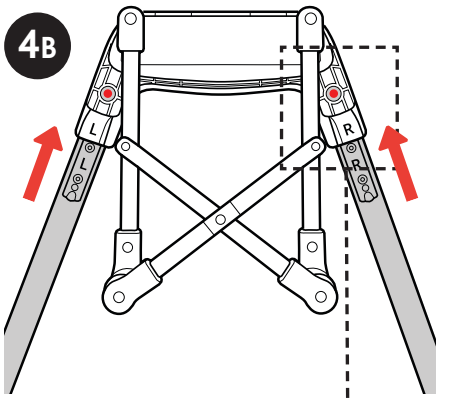

4B. Push both Legs into the Leg Hub until the pins lock into place.

Make sure the Legs are securely attached and the pins are engaged.

Repeat this step for the other Leg Hub and Legs.

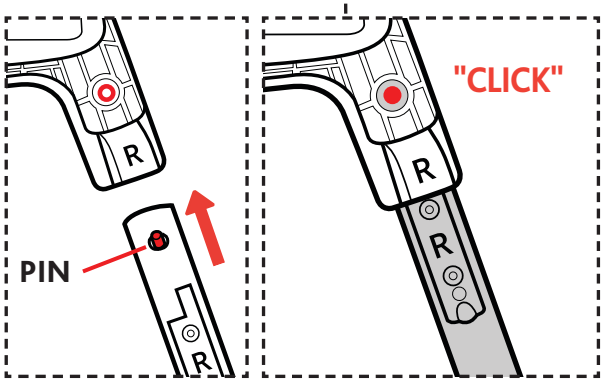

5

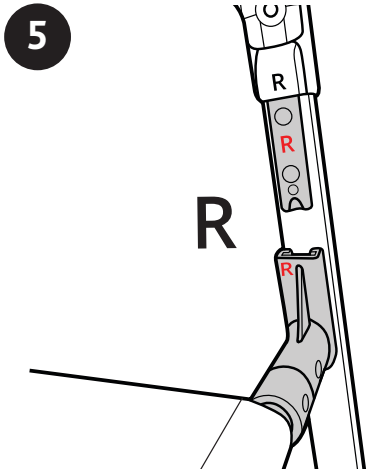

5. Match one of the right **(R)** arms of the Support Shelf to the right **(R)** Leg attachment point.

Pull back on the Release Barrel and slide the Support Shelf arm up onto the attachment point.

Let go of the Release Barrel to secure the Locking Pin into place.

Pull down on the Support Shelf arm to make sure that it is secured into place.

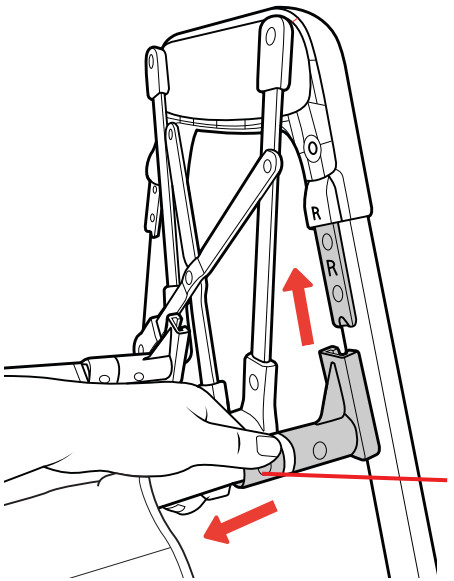

6

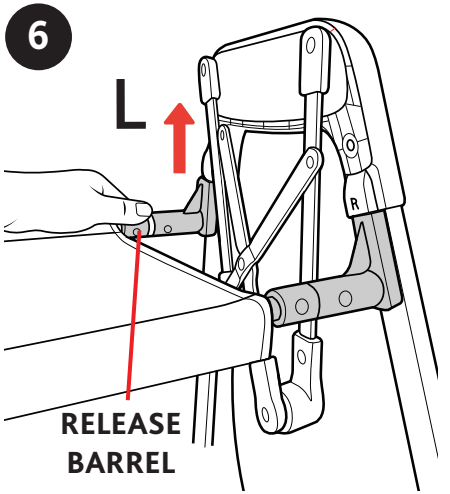

6. Then pull back on the Release Barrel and slide the left **(L)** Support Shelf arm up onto the left **(L)** attachment point.

Let go of the Release Barrel to secure the Locking Pin into place.

Pull down on the Support Shelf arm to make sure that it is secured into place.

Repeat Steps 5 and 6 for the other side of the Support Shelf.

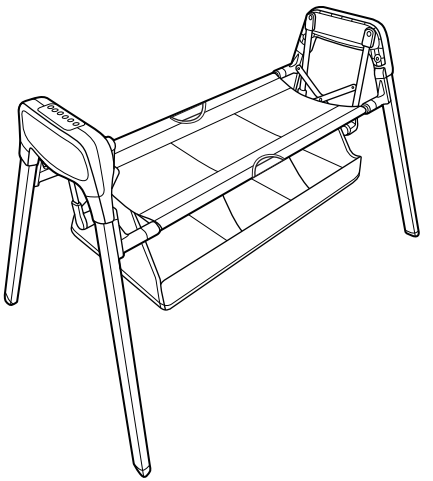

7

7. Lay the Attachment Frame on the Support Shelf.

8A

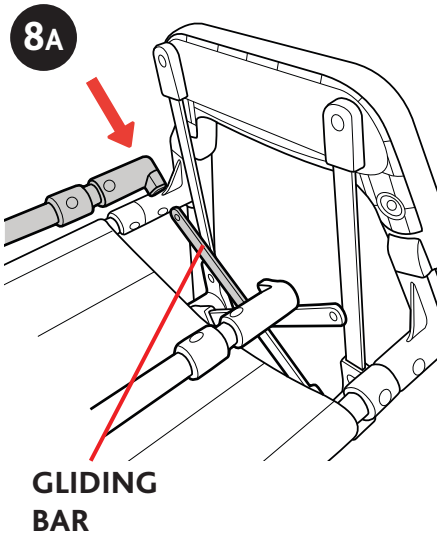

8A. Insert the Gliding Bar into the slot on the Attachment Frame arm.

Repeat this step for the rest of the Attachment Frame arms.

Stand Assembly

8B

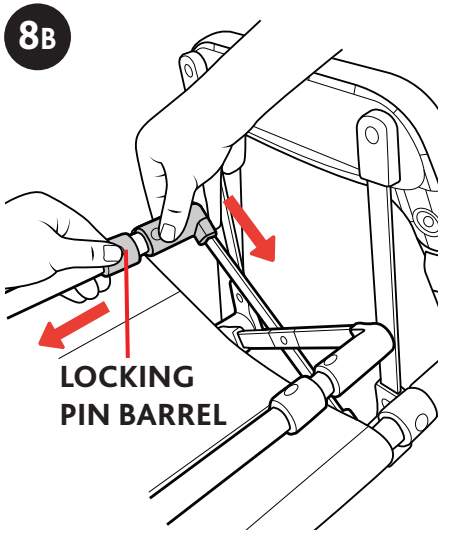

8B. Pull back on the Locking Pin Barrel while pushing the Attachment Frame arm down onto the Gliding Bar to lock it into place.

Repeat this step for the rest of the Attachment Frame arms.

8C

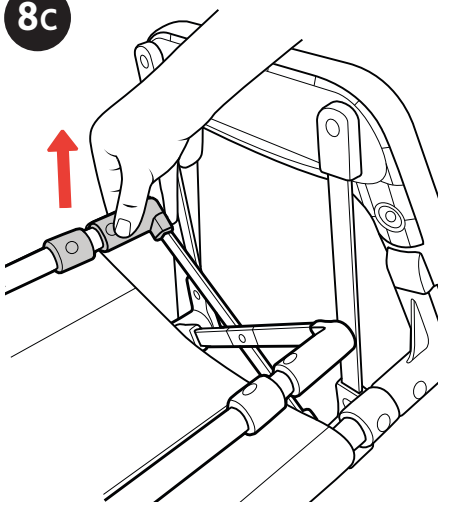

8C. Pull up on the Attachment Frame arm to ensure that the locking pin is engaged.

Repeat this step for the rest of the Attachment Frame arms.

Using the Bassinet with Stand

⚠WARNING

FALL HAZARD - To help prevent falls, do not use this product when the infant begins to push up on hands and knees or has reached 20lbs (9kg), whichever comes first.

9A

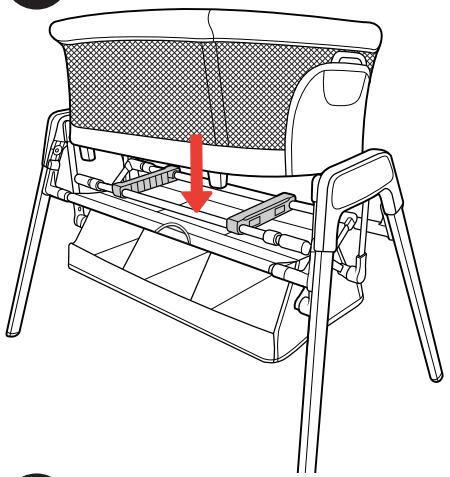

9A. Push the Bassinet down onto the Attachment Frame until it locks into place.

9B

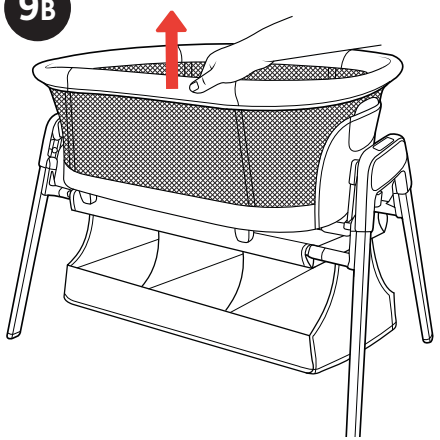

9B. Check to make sure that the Bassinet is secure by pulling up on the sides.

Using the Bassinet Control Panel

10

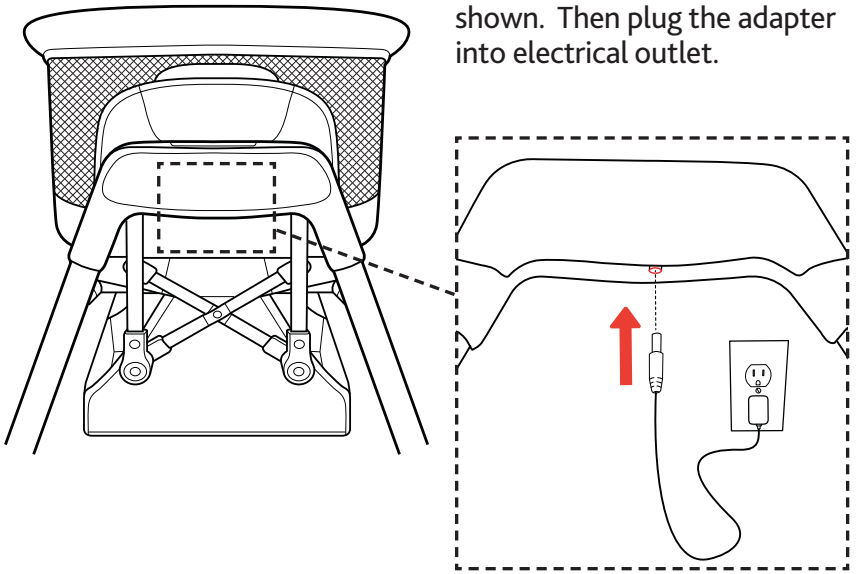

10. Insert the Power cord into the bottom of the side hub, as shown. Then plug the adapter into electrical outlet.

Using the Bassinet Control Panel

11

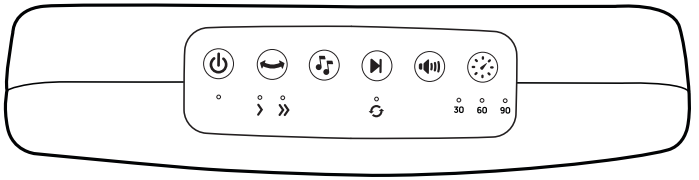

Power ⏻ Button:

Press the button one time to turn "ON" the control panel, and the light will illuminate. Press it again to turn it "OFF". ***Note:*** *If no buttons are pressed after turning "ON" the control panel it will automatically turn "OFF" after 1 minute.*

Speed Button (2 Modes):

"LOW" ❯ and "HIGH" ❯❯): Press the Speed Button once to set on "LOW" ❯ and press the Speed Button again to set on "HIGH" ❯❯. The indicator light will illuminate on the selected Speed. Pressing the button again will turn "OFF" the Speed Modes.

Timer Button:

Press the Timer Button to cycle through the Timer Modes of 30 minutes, 60 minutes, 90 minutes. The indicator light will illuminate on the selected Timer Mode.

Music Button:

Press the Music Button to play music. Press the Music button a second time to stop the music.

Skip/Repeat Button (2 Modes):

First mode: Skip Track. To skip to the next track, press the button quickly. Second mode: Repeat Track. Press and hold the button for 2 seconds (loop icon light will turn on) and the selected track will continue looping for 30 minutes.

Volume Button:

Press the Volume button to cycle through LOW, MEDIUM, HIGH, MEDIUM, LOW volume.

Bluetooth®:

To connect to Bluetooth®, make sure the control panel is in the "OFF" position to start. Then press the Power ⏻ Button to turn "ON" the control panel and set your phone to pairing mode. Look for "CHICCO BASSINET" and use pairing code **1111**.

Manual Gliding Mode

12

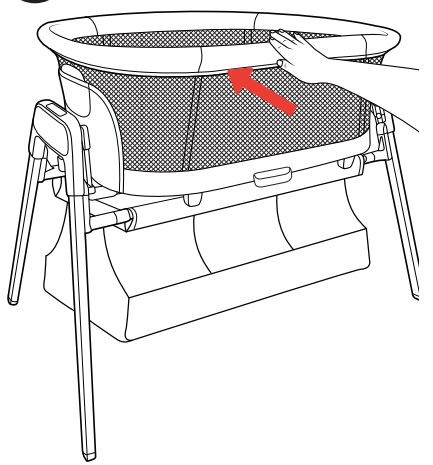

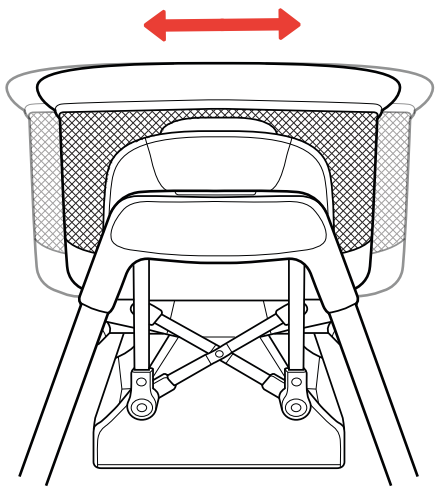

12. The Bassinet can be used without electronic controls by gently pushing on the bassinet and swinging it back and forth.

Stationary Bassinet Mode

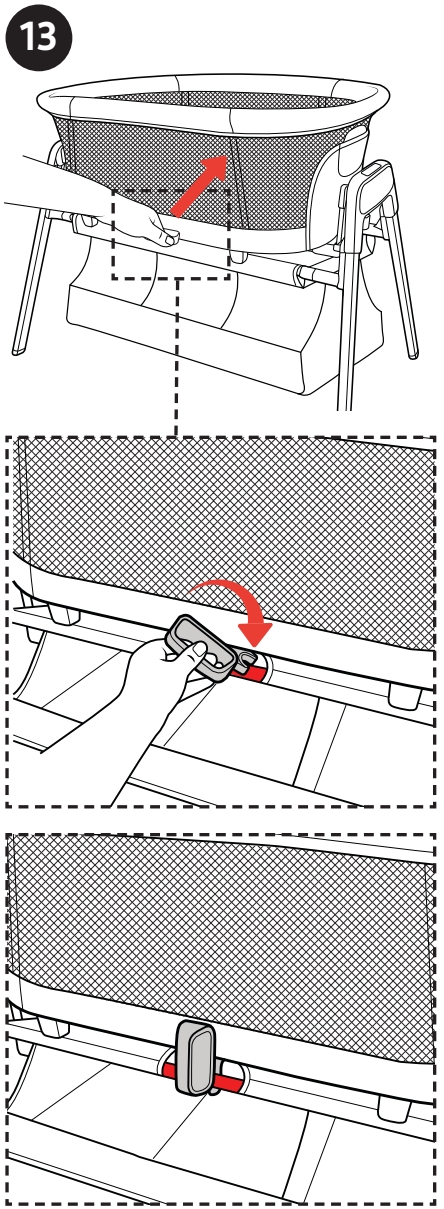

13. To lock the Bassinet into place, push forward on the Bassinet using the lock handle.

Then twist the lock handle vertical so the groove on the lock handle connects with the bar on the support shelf.

Using the Bassinet without Stand

⚠ WARNING

- Do not carry baby in the product.
- Always use product on the floor. Never use on an unintended elevated surface.
- Product can roll over on soft surfaces and suffocate child. Never place product on beds, sofas or other soft surfaces.

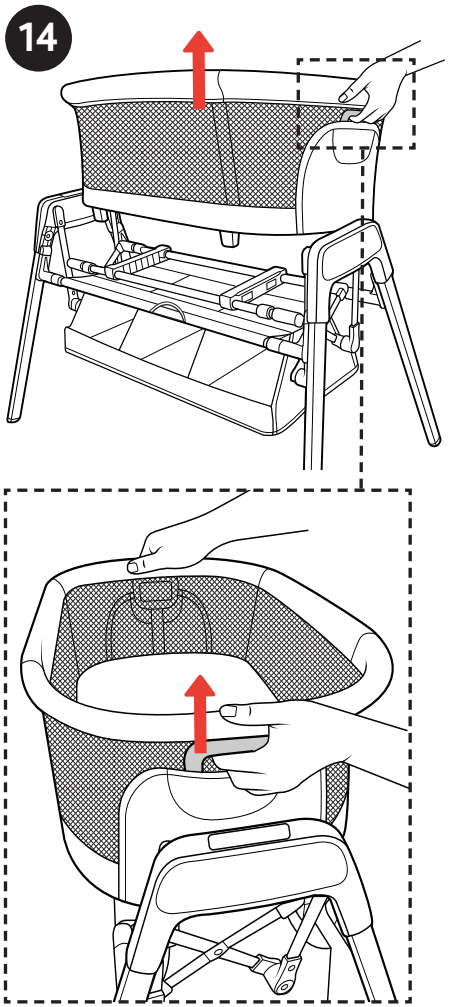

14. To use the Bassinet without the Stand, pull up on both of the Release Handles to remove the Bassinet.

Using the Bassinet without Stand

15

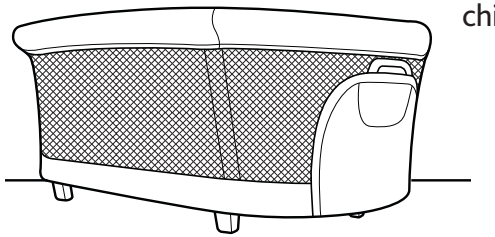

15. Place on a firm surface on the floor before placing your child in it.

Folding the Bassinet for Travel

16

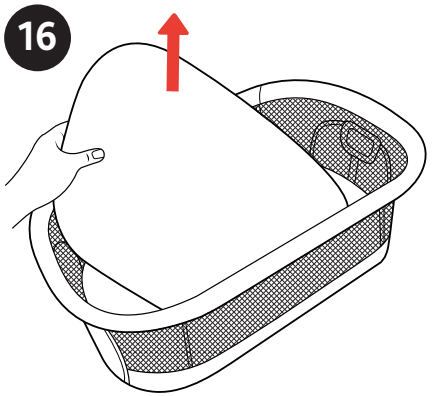

16. To fold the Bassinet for Travel, remove the Mattress Pad.

17

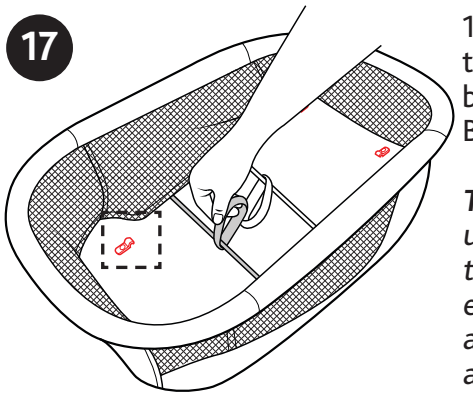

17. Pull in on both Pull Straps on the Extender Bars to unclip the bars and fold up the sides of the Bassinet.

Tip: *If having trouble unclipping the Extender Bar, the Pull Strap can be slid to either side of the Extender Bar allowing you to unclip one clip at a time.*

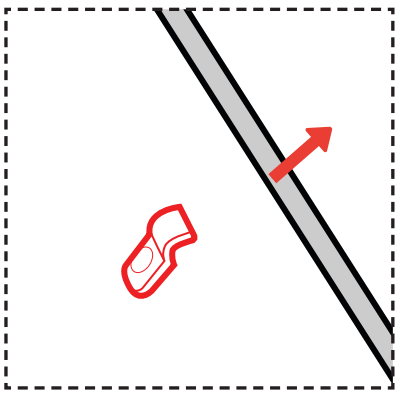

Folding the Bassinet for Travel

18

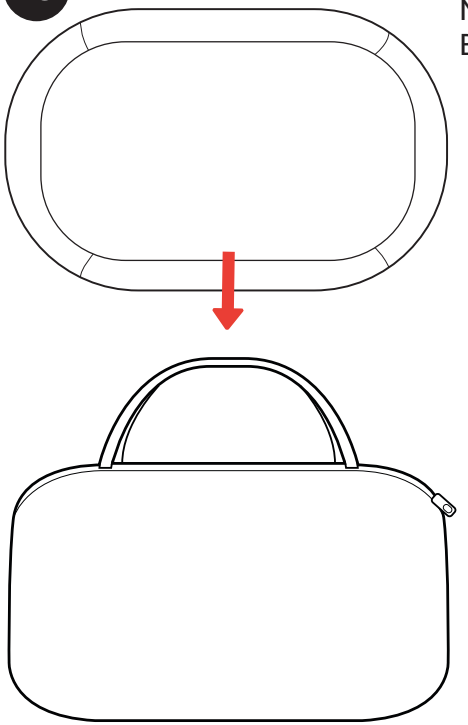

18. Store the Bassinet and the Mattress Pad inside the Carry Bag, as shown.

Storing the Product

19

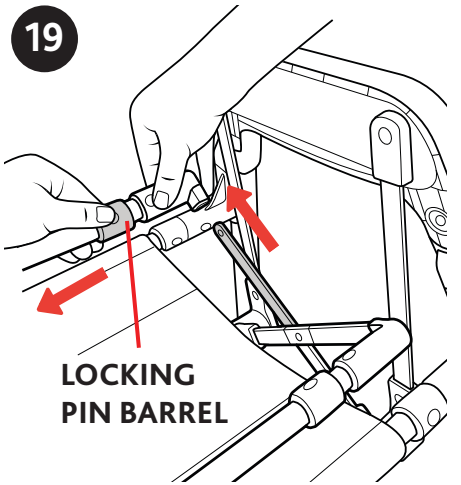

Refer to Steps 14-17 for removing and folding the Bassinet.

19. Pull back on the Locking Pin Barrel and pull out to remove the Attachment Frame arm from the Gliding Bar.

Repeat this step for the rest of the Attachment Frame arms.

20

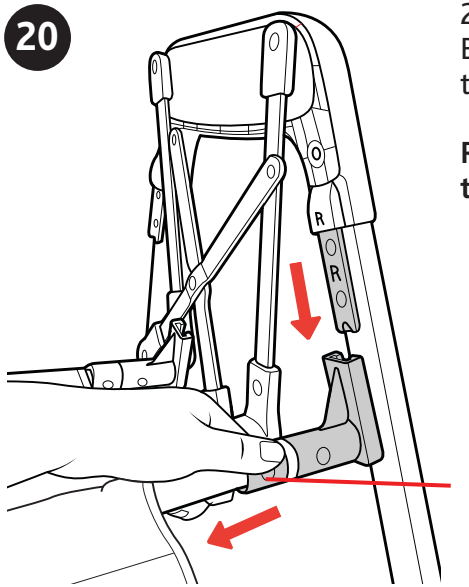

20. Pull back on the Release Barrel and pull down to remove the Support Shelf arm.

Repeat this step for the rest of the Support Shelf arms.

21

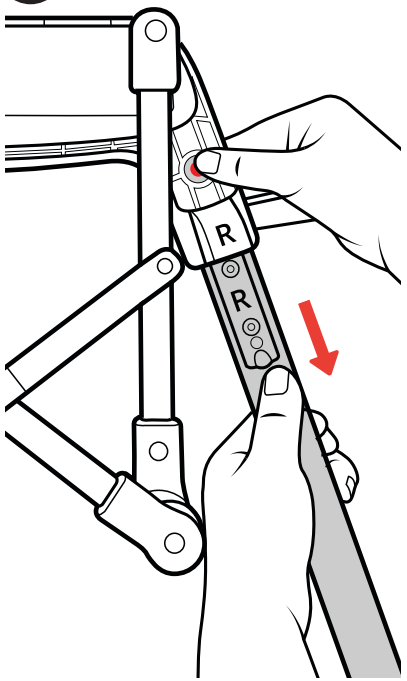

21. Remove the Legs by pushing in on the Pin and pulling the Leg out.

Repeat this step for the other Legs.

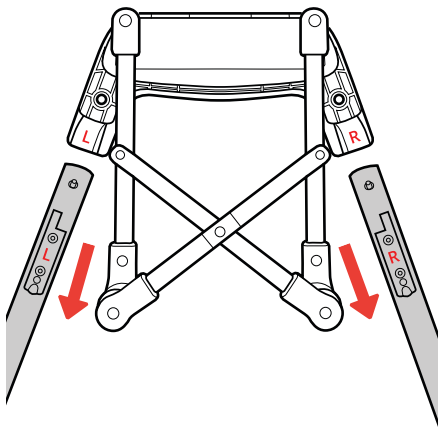

22

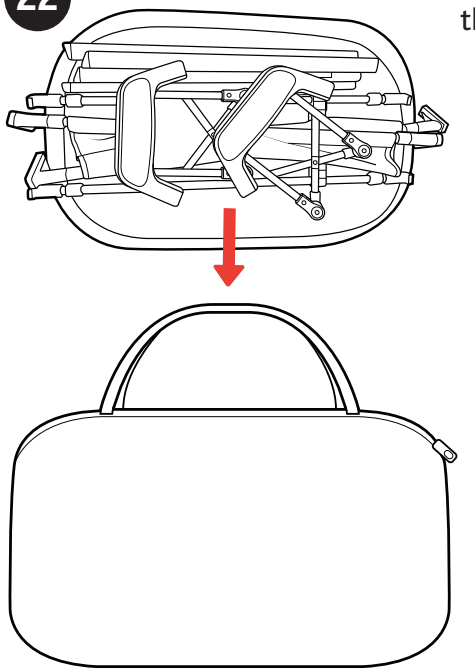

22. Store everything inside of the Carry Bag, as shown.

Cleaning and Maintenance

This product requires regular maintenance. The cleaning and maintenance of the product must only be carried out by an adult.

CLEANING

Please refer to the care label for instructions on cleaning the fabric parts of the Bassinet. You can spot clean the Mattress Pad with a damp cloth and mild detergent. Do not use bleach, spray, or wipes on the Pad or plastics parts on this product.

Mattress Pad sheet can be removed and washed, please refer to the care label for instructions on cleaning.

Periodically wipe clean plastic parts with a soft damp cloth. Always dry the metal parts to prevent the formation of rust if the product has come into contact with water.

For More Information

For USA customers :
If you have any questions or comments about this product, or are missing any of the parts, please do not return this product to the store.

Contact us in one of the following ways:

(877)-424-4226

info.usa@artsana.com

www.chiccousa.com

1826 William Penn Way
Lancaster, PA 17601

FCC Information

⚠WARNING

Changes or modifications not expressly approved by the party responsible for compliance could void the user's authority to operate the equipment.

NOTE: This equipment has been tested and found to comply with the limits for a Class B digital device, pursuant to Part 15 of the FCC Rules. These limits are designed to provide reasonable protection against harmful interference in a residential installation. This equipment generates, uses and can radiate radio frequency energy and, if not installed and used in accordance with the instructions, may cause harmful interference to radio communications. However, there is no guarantee that interference will not occur in a particular installation. If this equipment does cause harmful interference to radio or television reception, which can be determined by turning the equipment off and on, the user is encouraged to try to correct the interference by one or more of the following measures:

- Reorient or relocate the receiving antenna.
- Increase the separation between the equipment and receiver.
- Connect the equipment into an outlet on a circuit different from that to which the receiver is connected.
- Consult the dealer or experienced radio/TV technician for help.

This device complies with Part 15 of the FCC Rules. Operation is subject to the following conditions: (1) this devise may not cause harmful interference, and (2) this device must accept any interference received, including interference that may cause undesired operation.

Bluetooth®

The Bluetooth® word mark and logos are registered trademarks owned by Bluetooth SIG, Inc. and any use of such marks by Artsana S.p.A. is under license. Other trademarks and trade names are those of their respective owners.

[Kee-Ko] If you say it right it makes you *smile*

chicco