FCC Test Report

Report No: FCS202504091W01

Issued for

Applicant:	Munro Engineers
Address:	418 Winter Street, Ballarat Vic 3350 Australia
Product Name:	Remote control
Brand Name:	Fence Boss
Model Name:	ZHYR04B
Series Model:	N/A
FCC ID:	2BOZX-ZHYR04B
Issued By: Flux Compliance Service Laboratory Add: Room 105 Floor Bao hao Technology Building 1 NO.15 Gong ye West Road Hi-Tech Industrial, Song shan lake Dongguan Tel: 0769-27280901 Fax:0769-27280901 http://www.FCS-lab.com	

TEST RESULT CERTIFICATION

Applicant's Name..... :	Munro Engineers
Address..... :	418 Winter Street, Ballarat Vic 3350 Australia
Manufacture's Name..... :	Ningbo Arcming Transmission Technology Co.,Ltd.
Address..... :	A311, No.101-1 Buzheng East Road, Jishigang Town, Haishu District, Ningbo City, Zhejiang Province, China.

Product Description

Product Name..... :	Remote control
Brand Name .....:	N/A
Model Name..... :	ZHYR04B
Series Model.....:	N/A
Test Standards..... :	FCC Rules and Regulations Part 15 Subpart C, Section 231
Test Procedure..... :	ANSI C63.10:2013

This device described above has been tested FCS, the test results show that the equipment under test (EUT) is in compliance with the FCC requirements. And it is applicable only to the tested sample identified in the report.
This report shall not be reproduced except in full, without the written approval of FCS, this document may be altered or revised by FCS, personal only, and shall be noted in the revision of the document..

Date of Test..... :

Date (s) of performance of tests. :	April. 03, 2025 ~ May. 26, 2025
Date of Issue.....:	May. 26, 2025
Test Result.....:	Pass

Tested by : Scott shen

(Scott Shen)

Reviewed by : Duke Qian

(Duke Qian)

Approved by : Jack Wang

(Jack Wang)

Table of Contents Page

1. SUMMARY OF TEST RESULTS 6
1.1 TEST FACTORY 7
1.2 MEASUREMENT UNCERTAINTY 7
2. GENERAL INFORMATION 8
2.1 GENERAL DESCRIPTION OF THE EUT 8
2.2 DESCRIPTION OF THE TEST MODES 9
2.3 DESCRIPTION OF NECESSARY ACCESSORIES AND SUPPORT UNITS 10
2.4 EQUIPMENTS LIST 11
3 CONDUCTED EMISSION MEASUREMENT 12
3.1 LIMIT 12
3.2 TEST PROCEDURE 12
3.3 TEST SETUP 13
4. RADIATED EMISSION MEASUREMENT 15
4.1 LIMIT 15
4.2 TEST PROCEDURE 16
4.3 TEST SETUP 17
4.4 TEST RESULTS 18
5. TRANSMITTER TIME 22
5.1 LIMIT 22
5.2 TEST PROCEDURE 22
5.3 TEST SETUP 22
5.4 TEST RESULTS 22
6. 20 DB BANDWIDTH TEST 23
6.1 LIMIT 23
6.2 TEST PROCEDURE 23
6.3 TEST SETUP 23
6.4 TEST RESULTS 24
7. DUTY CYCLE 25
7.1 LIMIT 25
7.2 TEST PROCEDURE 25
7.3 TEST SETUP 25
7.4 TEST RESULTS 26

Table of Contents **Page**

8 ANTENNA REQUIREMENT 29
8.1 STANDARD REQUIREMENT 29
8.2 EUT ANTENNA 29

Revision History

Rev.	Issue Date	Effect Page	Contents
00	May. 26, 2025	N/A	Initial Issue

1. SUMMARY OF TEST RESULTS

FCC Part 15.231,Subpart C			
Standard Section	Test Item	Judgment	Remark
15.207	Conducted Emission	N/A	--
15.209, 15.231(b)	Radiated Emission	PASS	--
15.231(a) (1)	Transmitter time	PASS	--
15.231(c)	20dB Bandwidth	PASS	--
15.231	Duty cycle	PASS	--
15.203	Antenna Requirement	PASS	--

NOTE:

(1)" N/A" denotes test is not applicable in this Test Report

(2) All tests are according to ANSI C63.10-2013

1.1 TEST FACTORY

Company Name:	Flux Compliance Service Laboratory
Address:	Room 105 Floor Bao hao Technology Building 1 NO.15 Gong ye West Road Hi-Tech Industrial, Song shan lake Dongguan
Telephone:	+86-0769-27280901
Fax:	+86-0769-27280901
FCC Test Firm Registration Number: 514908 Designation number: CN0127 A2LA accreditation number：5545.01	

1.2 MEASUREMENT UNCERTAINTY

The reported uncertainty of measurement **y ±U**, where expended uncertainty **U** is based on a standard uncertainty multiplied by a coverage factor of **k=2**, providing a level of confidence of approximately **95** %.

No.	Item	Uncertainty
1	RF output power, conducted	±0.71dB
2	Unwanted Emissions, conducted	±2.98 dB
3	Conducted Emission (9KHz-150KHz)	±4.13 dB
4	All emissions radiated (9KHz -30MHz)	±3.1 dB
5	Conducted Emission (150KHz-30MHz)	±4.74 dB
6	All emissions,radiated(<1G) 30MHz-1000MHz	±3.2 dB
7	All emissions,radiated (1GHz -18GHz)	±3.66 dB
8	All emissions,radiated (18GHz -40GHz)	±4.31 dB
9	Occupied bandwidth	±0.3 dB

2. GENERAL INFORMATION

2.1 GENERAL DESCRIPTION OF THE EUT

Product Name	Remote control
Trade Name	N/A
Model Name	ZHYR04B
Series Model	N/A
Model Difference	N/A
Frequency	433.92MHz
Modulation	ASK
Antenna type	PCB antenna
Power Supply	DC 3V
Battery	DC 3V
Hardware version number	V1.0
Software version number	V1.0
Connecting I/O Port(s)	Please refer to the User's Manual

Note:

1. For a more detailed features description, please refer to the manufacturer's specifications or the User's Manual.
2. Table for Filed Antenna

Ant.	Brand	Model Name	Antenna Type	Connector	Gain (dBi)	NOTE
1	N/A	433.92MHz	PCB antenna	N/A	-0.95 dBi	Antenna

2.2 DESCRIPTION OF THE TEST MODES

To investigate the maximum EMI emission characteristics generates from EUT, the test system was pre-scanning tested base on the consideration of following EUT operation mode or test configuration mode which possible have effect on EMI emission level. Each of these EUT operation mode(s) or test configuration mode(s) mentioned above was evaluated respectively.

Configuration and peripherals

EUT

Test environment conditions
During the measurement the environmental conditions were within the listed ranges:
Temperature range: 21-25℃
Humidity range: 40-75%
Pressure range: 86-106kPa

2.3 DESCRIPTION OF NECESSARY ACCESSORIES AND SUPPORT UNITS

The EUT has been tested as an independent unit together with other necessary accessories or support units. The following support units or accessories were used to form a representative test configuration during the tests.

Necessary accessories

Item	Equipment	Mfr/Brand	Model/Type No.	Serial No.	Note

Support units

Item	Equipment	Mfr/Brand	Model/Type No.	Serial No.	Note

Note:

(1) The support equipment was authorized by Declaration of Confirmation.

(2) For detachable type I/O cable should be specified the length in cm in『Length』column.

(3) “YES” is means “shielded” “with core”; “NO” is means “unshielded” “without core”.

2.4 EQUIPMENTS LIST

Radiation Test equipment

Kind of Equipment	Manufacturer	Type No.	Company No.	Last calibration	Calibrated until
EMI Test Receiver	R&S	ESRP 3	FCS-E001	2024.08.28	2025.08.27
Signal Analyzer	R&S	FSV40-N	FCS-E012	2024.08.28	2025.08.27
Active loop Antenna	ZHINAN	ZN30900C	FCS-E013	2024.08.28	2025.08.27
Bilog Antenna	SCHWARZBECK	VULB 9168	FCS-E002	2024.08.28	2025.08.27
Horn Antenna	SCHWARZBECK	BBHA 9120D	FCS-E003	2024.08.28	2025.08.27
SHF-EHF Horn Antenna (18G-40GHz)	A-INFO	LB-180400-KF	FCS-E018	2024.08.28	2025.08.27
Pre-Amplifier(0.1M-3G Hz)	EMCI	EM330N	FCS-E004	2024.08.28	2025.08.27
Pre-Amplifier (1G-18GHz)	N/A	TSAMP-0518SE	FCS-E014	2024.08.28	2025.08.27
Pre-Amplifier (18G-40GHz)	TERA-MW	TRLA-0400	FCS-E019	2024.08.28	2025.08.27
Temperature & Humidity	HTC-1	victor	FCS-E005	2024.08.28	2025.08.27

Conduction Test equipment

Kind of Equipment	Manufacturer	Type No.	Company No.	Last calibration	Calibrated until
EMI Test Receiver	R&S	ESPI	FCS-E020	2024.08.28	2025.08.27
LISN	R&S	ENV216	FCS-E007	2024.08.28	2025.08.27
LISN	ETS	3810/2NM	FCS-E009	2024.08.28	2025.08.27
Temperature & Humidity	HTC-1	victor	FCS-E008	2024.08.28	2025.08.27

RF Connected Test

Kind of Equipment	Manufacturer	Type No.	Company No.	Last calibration	Calibrated until
Spectrum Analyzer	Keysight	N9020A	FCS-E015	2024.08.28	2025.08.27
Spectrum Analyzer	Agilent	E4447A	MY50180039	2024.08.28	2025.08.27
Spectrum Analyzer	R&S	FSV-40	101499	2024.08.28	2025.08.27

3 CONDUCTED EMISSION MEASUREMENT

3.1 LIMIT

Operating frequency band. In case the emission fall within the restricted band specified on Part 207(a) limit in the table below has to be followed.

FREQUENCY (MHz)	Conducted Emissionlimit (dBuV)	
	Quasi-peak	Average
0.15 -0.5	66 - 56 *	56 - 46 *
0.50 -5.0	56.00	46.00
5.0 -30.0	60.00	50.00

Note:
(1) The tighter limit applies at the band edges.
(2) The limit of " * " marked band means the limitation decreases linearly with the logarithm of the frequency in the range.

3.2 TEST PROCEDURE

The following table is the setting of the receiver

Receiver Parameters	Setting
Attenuation	10 dB
Start Frequency	0.15 MHz
Stop Frequency	30 MHz
IF Bandwidth	9 kHz

a. The EUT was 0.8 meters from the horizontal ground plane and 0.4 meters from the vertical ground plane with EUT being connected to the power mains through a line impedance stabilization network (LISN). All other support equipments powered from additional LISN(s). The LISN provide 50 Ohm/ 50uH of coupling impedance for the measuring instrument.
b. Interconnecting cables that hang closer than 40 cm to the ground plane shall be folded back and forth in the center forming a bundle 30 to 40 cm long.
c. I/O cables that are not connected to a peripheral shall be bundled in the center. The end of the cable may be terminated, if required, using the correct terminating impedance. The overall length shall not exceed 1 m.
d. LISN at least 80 cm from nearest part of EUT chassis.
e. For the actual test configuration, please refer to the related Item –EUT Test Photos.

3.3 TEST SETUP

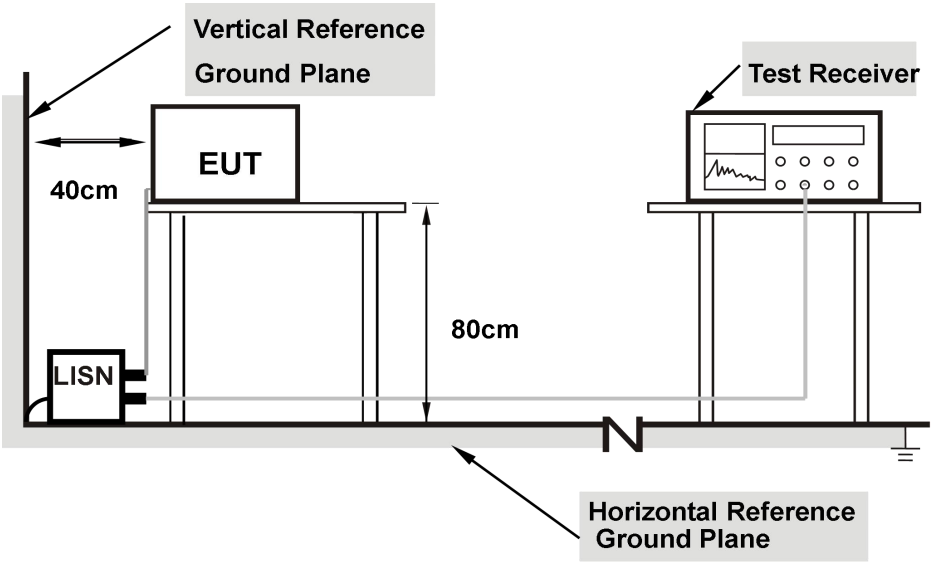

Note: 1.Support units were connected to second LISN.

2.Both of LISNs (AMN) are 80 cm from EUT and at least 80 from other units and other metal planes

3.4 TEST RESULTS

Temperature:	25℃	Relative Humidity:	50%
Test Mode:	N/A	Test Voltage:	N/A
Result:	N/A	Result:	N/A

Note:This product is battery powered and is not suitable for this project.

4. RADIATED EMISSION MEASUREMENT

4.1 LIMIT

In any 100 kHz bandwidth outside the operating frequency band. In case the emission fall within the Restricted band specified on Part15.205(a)&209(a) limit in the table and according to ANSI C63.10-2013 below has to be followed

LIMITS OF RADIATED EMISSION MEASUREMENT (0.009mhz - 1000mhz)

Frequencies (MHz)	Field Strength (micorvolts/meter)	Measurement Distance (meters)
0.009~0.490	2400/F(KHz)	300
0.490~1.705	24000/F(KHz)	30
1.705~30.0	30	30
30~88	100	3
88~216	150	3
216~960	200	3
Above 960	500	3

LIMITS OF RADIATED EMISSION MEASUREMENT (1GHz-25 GHz)

FREQUENCY (MHz)	(dBuV/m) (at 3M)	
	PEAK	AVERAGE
Above 1000	74	54

LIMITS OF FIELD STRENGTH OF THE FUNDAMENTAL SIGNAL

FREQUENCY (MHz)	(dBuV/m) (at 3M)	
	PEAK	AVERAGE
433.92	100.83	80.83

Note: (1) The emission limits shown in the above table are based on measurements employing a CISPR QP detector except for the frequency bands 9-90kHz, 110-490kHz and above 1000MHz.Radiated emissions limits in these three bands are based on measurements employing an average detector

(2) At frequencies below 30MHz, measurement may be performed at a distance closer then that specified, and the limit at closer measurement distance can be extrapolated by below formula:
Limit3m(dBuV/m)= Limit300m(dBuV/m) + 40Log(300m/3m) = Limit300m(dBuV/m) + 80
Limit3m(dBuV/m)= Limit30m(dBuV/m) + 40Log(30m/3m) = Limit30m(dBuV/m) + 40

(3) Limit for this EUT
All the emissions appearing within 15.205 restricted frequency bands shall not exceed the limits shown in 15.209, all the other emissions include fundamental emission shall not exceed FCC 15.231 section (b) limit of comply with FCC 15.209 limit which permit higher emission level.

[Where F is the frequency in MHz, the formulas for calculating the maximum permitted fundamental field strengths are as follows: for the band 130-174 MHz, uV/m at 3 meters = 56.81818(F) - 6136.3636; for the band 260-470 MHz, uV/m at 3 meters = 41.6667(F) - 7083.3333. The maximum permitted unwanted emission level is 20 dB below the maximum permitted fundamental level.]

4.2 TEST PROCEDURE

a. The measuring distance of at 3 m shall be used for measurements at frequency 0.009MHz up to 1GHz,and above 1GHz.
b. The EUT was placed on the top of a rotating table 0.8 meters (above 1GHz is 1.5 m) above the ground at a 3 meter anechoic chamber test site. The table was rotated 360 degrees to determine the position of the highest radiation.
c. The height of the equipment shall be 0.8 m(above 1GHz is 1.5 m); the height of the test antenna shall vary between 1 m to 4 m. horizontal and vertical polarizations of the antenna are set to make the measurement.
d. The initial step in collecting conducted emission data is a spectrum analyzer peak detector mode pre-scanning the measurement frequency range. Significant peaks are then marked and then QuasiPeak detector mode re-measured.
e. If the Peak Mode measured value compliance with and lower than Quasi Peak Mode Limit, the EUT shall be deemed to meet QP Limits and then no additional QP Mode measurement performed.
f. For the actual test configuration, please refer to the related Item –EUT Test Photos.

Note:
Both horizontal and vertical antenna polarities were tested and performed pretest to three orthogonal axis. The worst case emissions were reported

4.3 TEST SETUP

（A）Radiated Emission Test-Up Frequency Below 30MHz

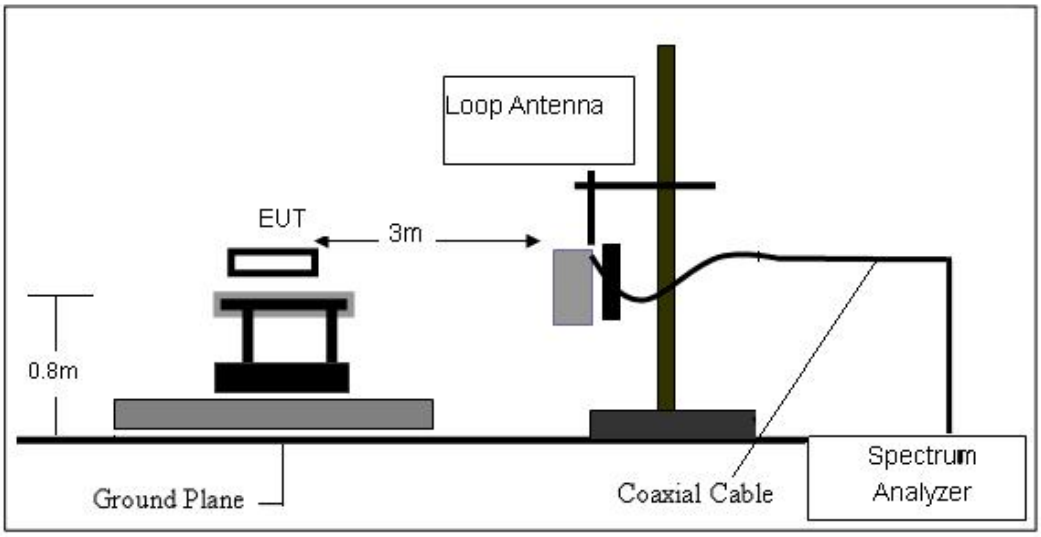

（B）Radiated Emission Test-Up Frequency 30MHz~1GHz

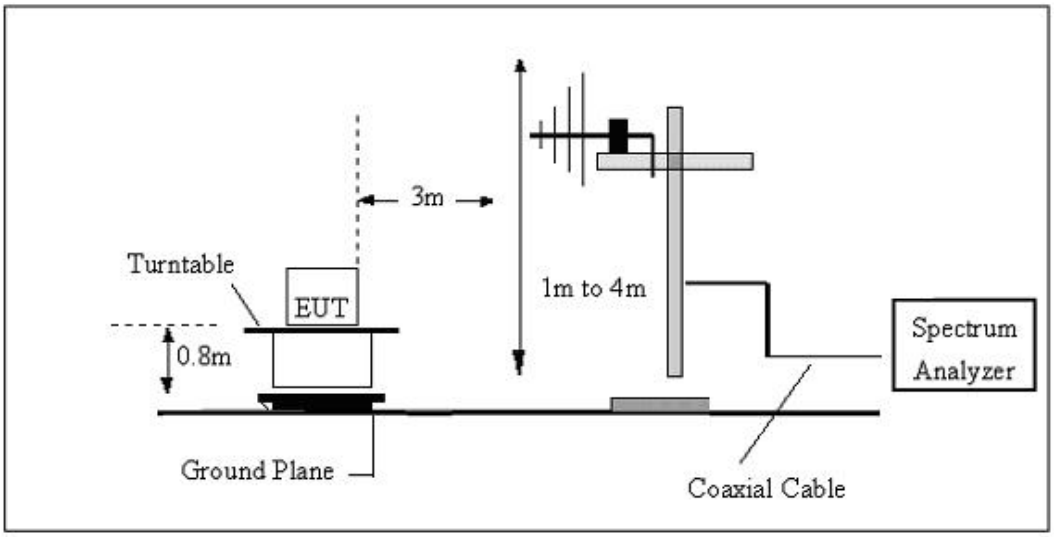

（C）Radiated Emission Test-Up Frequency Above 1GHz

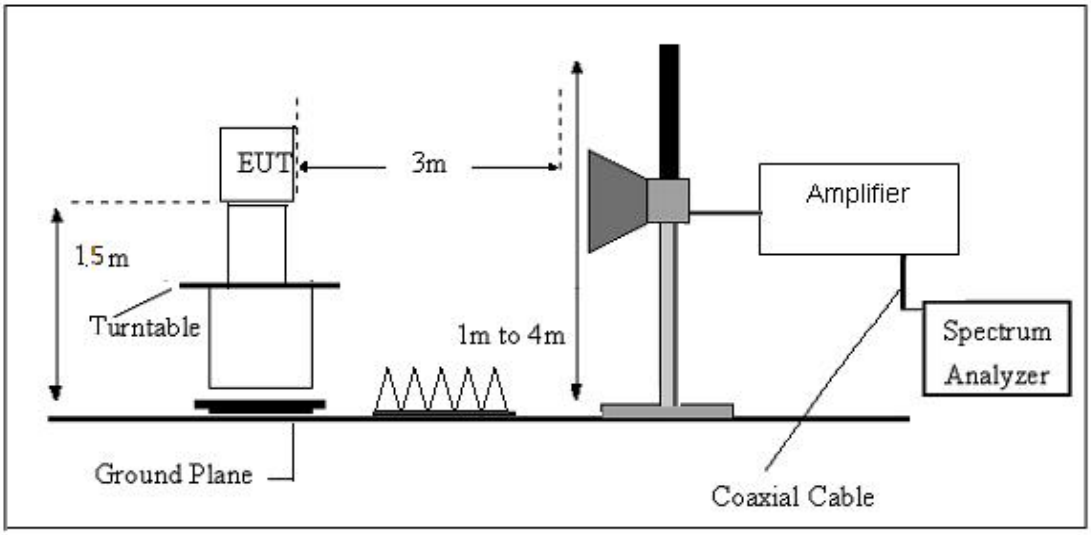

4.4 TEST RESULTS

Temperature:	25℃	Relative Humidity:	60%
Test Mode:	ASK	Test Voltage:	DC 3V

For field strength of the fundamental signal

Peak value

Frequency (MHz)	Peak Level(dBuV/m)	Peak limit (dBuV/m)	Over Limit(dB)	Polarization
433.92	63.69	100.83	-37.14	H
433.92	67.19	100.83	-33.64	V

Average value

Frequency (MHz)	AV Level (dBuV/m)	AV limit (dBuV/m)	Over Limit (dB)	Polarization
433.92	56.36	80.83	-24.47	H
433.92	59.86	80.83	-20.97	V

Note: av Level=pk level +PDCF
Duty cycle factor= -7.33dB

For spurious emission

(9KHz-30MHz)

Freq.	Reading	Limit	Margin	State	Test Result
(MHz)	(dBuV/m)	(dBuV/m)	(dB)	P/F	
--	--	--	--	--	PASS
--	--	--	--	--	PASS

Note:
The amplitude of spurious emissions which are attenuated by more than 20dB below the permissible value has no need to be reported.
Distance extrapolation factor =40 log (specific distance/test distance)(dB);
Limit line = specific limits (dBuv) + distance extrapolation factor.

(30MHZ-1000MHZ)

Temperature:	23.7℃	Relative Humidity:	61%
Test Voltage:	DC 3V	Phase:	Horizontal
Test Mode:	ASK		

No.	Frequency (MHz)	Reading (dBuV)	Correct Factor(dB/m)	Result (dBuV/m)	Limit (dBuV/m)	Margin (dB)	Remark
1	31.7312	31.05	-8.34	22.71	40.00	-17.29	QP
2	69.8450	37.24	-19.68	17.56	40.00	-22.44	QP
3	157.5586	50.00	-32.11	17.89	43.50	-25.61	QP
4	252.9481	53.02	-31.97	21.05	46.00	-24.95	QP
5	433.9200	95.19	-31.50	63.69	100.83	-37.14	Peak
6	903.3093	60.33	-30.70	29.63	46.00	-16.37	QP

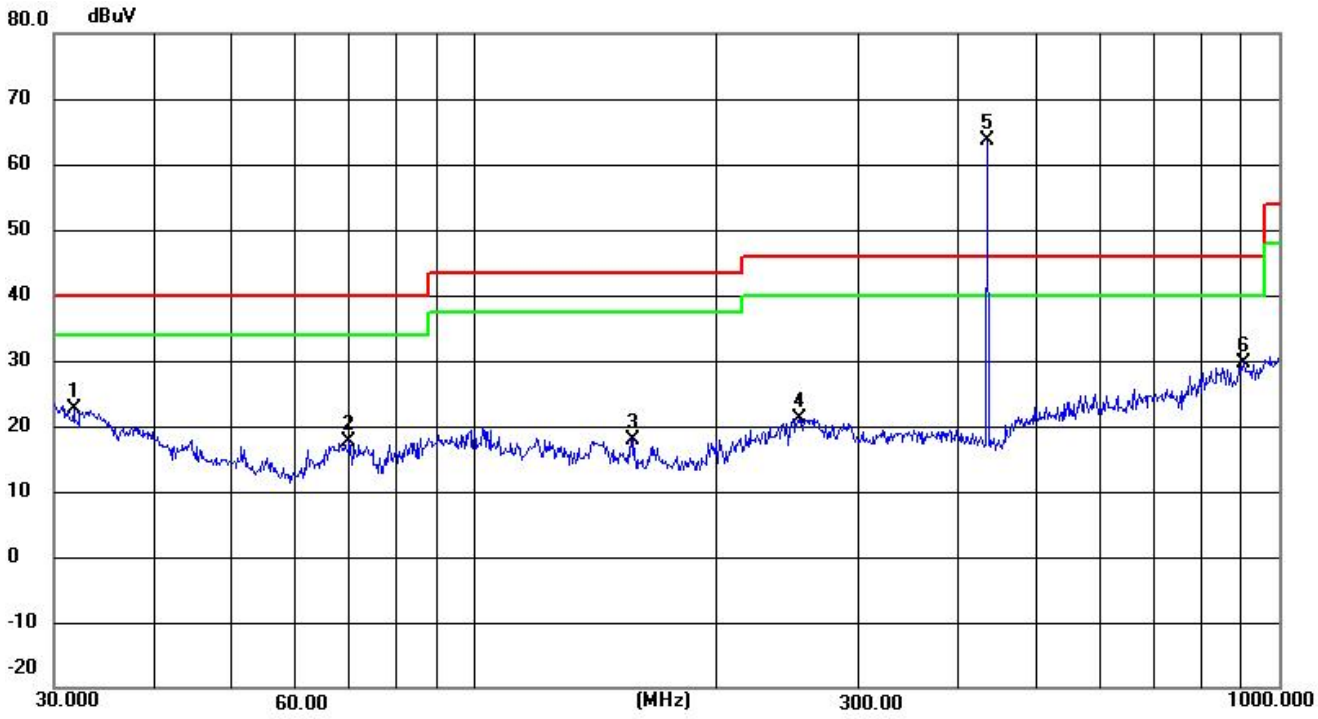

1. Result = Reading + Corrected Factor Note :

Temperature:	22.7℃	Relative Humidity:	61%
Test Voltage:	DC 3V	Phase:	Vertical
Test Mode:	ASK		

No.	Frequency (MHz)	Reading (dBuV)	Correct Factor(dB/m)	Result (dBuV/m)	Limit (dBuV/m)	Margin (dB)	Remark
1	31.7312	32.55	-8.34	24.21	40.00	-15.79	QP
2	70.8315	38.07	-19.62	18.45	40.00	-21.55	QP
3	148.9624	52.04	-32.13	19.91	43.50	-23.59	QP
4	316.5890	54.18	-31.85	22.33	46.00	-23.67	QP
5	433.9200	98.69	-31.50	67.19	100.83	-33.64	Peak
6	836.2441	60.17	-30.76	29.41	46.00	-16.59	QP

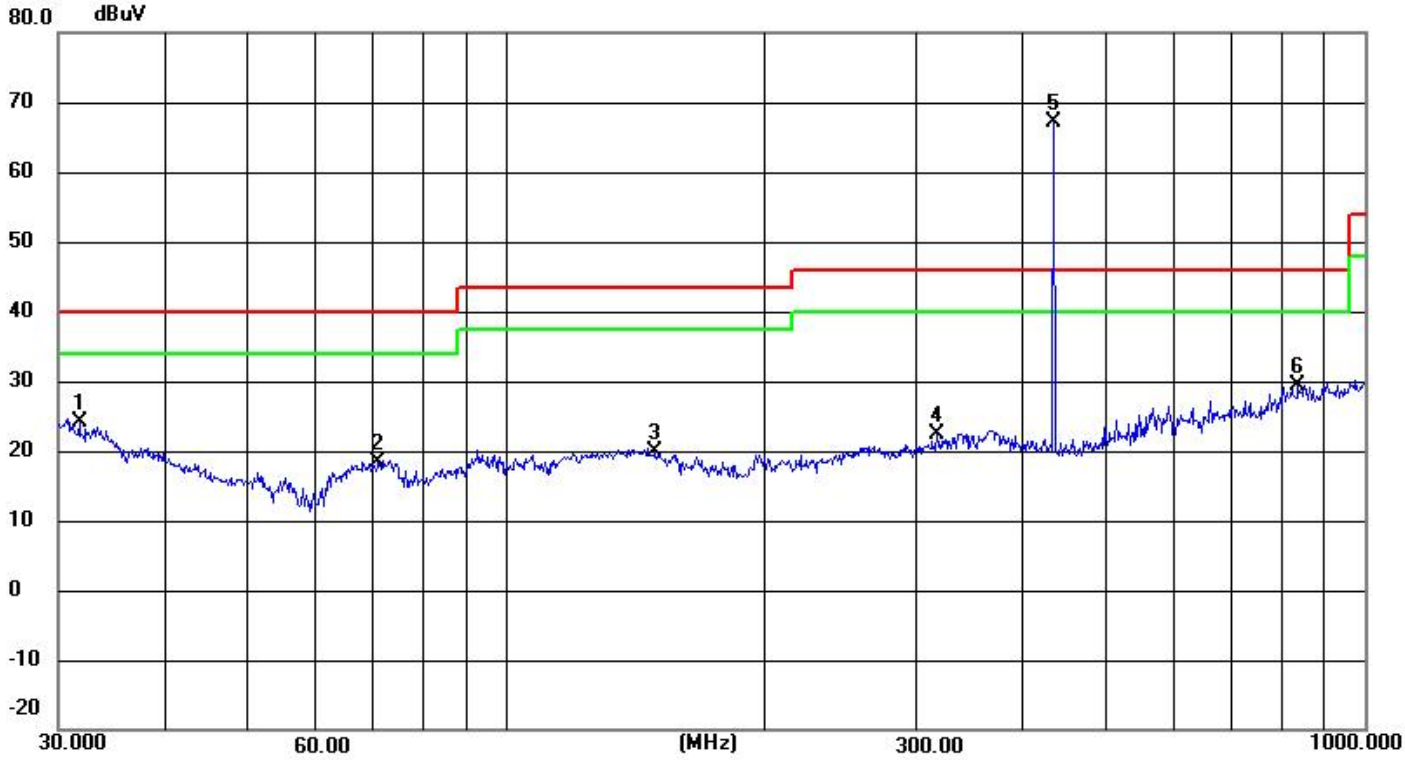

1. Result = Reading + Corrected Factor Note :

Freq.	Ant.PoL	Emission Level(dBuV/m)		Limit 3m(dBuV/m)		Margin(dB)	
(MHz)	H/V	PK	AV	PK	AV	PK	AV
1301.76	V	49.63	42.30	74	54	-24.37	-11.7
1735.68	V	50.82	43.49	80.83	60.83	-30.01	-17.34
2169.60	V	51.55	44.22	80.83	60.83	-29.28	-16.61
2603.52	V	51.21	43.88	80.83	60.83	-29.62	-16.95
1301.76	H	52.44	45.11	74	54	-21.56	-8.89
1735.68	H	51.50	44.17	80.83	60.83	-29.33	-16.66
2169.60	H	50.92	43.59	80.83	60.83	-29.91	-17.24
2603.52	H	51.59	44.26	80.83	60.83	-29.24	-16.57

Note: 1. Final Test Level =Receiver Reading - Correct Factor

Correct Factor = Preamplifier Factor– Antenna Factor–Cable Factor

2: For emissions above 1GHz. If peak results comply with AV limit, AV Result is deemed to comply with AV limit.

3. Measuring frequencies from 9k~10th harmonic , No emission found between lowest internal used/generated frequency to 30MHz.

4.The amplitude of spurious emissions which are attenuated more than 20 dB below the limits are not reported.

5. TRANSMITTER TIME

5.1 LIMIT

A transmitter activated automatically shall cease transmission within 5 seconds afteractivation.

5.2 TEST PROCEDURE

a. The EUT's RF signal was coupled to spectrum analyzer by antenna connected to spectrum analyzer.

b. Set the spectrum to zero span mode, and centered of EUT frequency.

c. Measure the stop transmitting time after release EUT button

5.3 TEST SETUP

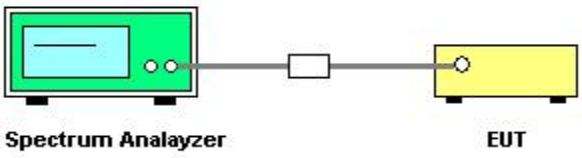

5.4 TEST RESULTS

Frequency(MHz)	TRANSMITTER TIME	Limit	Result
433.92	0.28s	≤5s	Pass

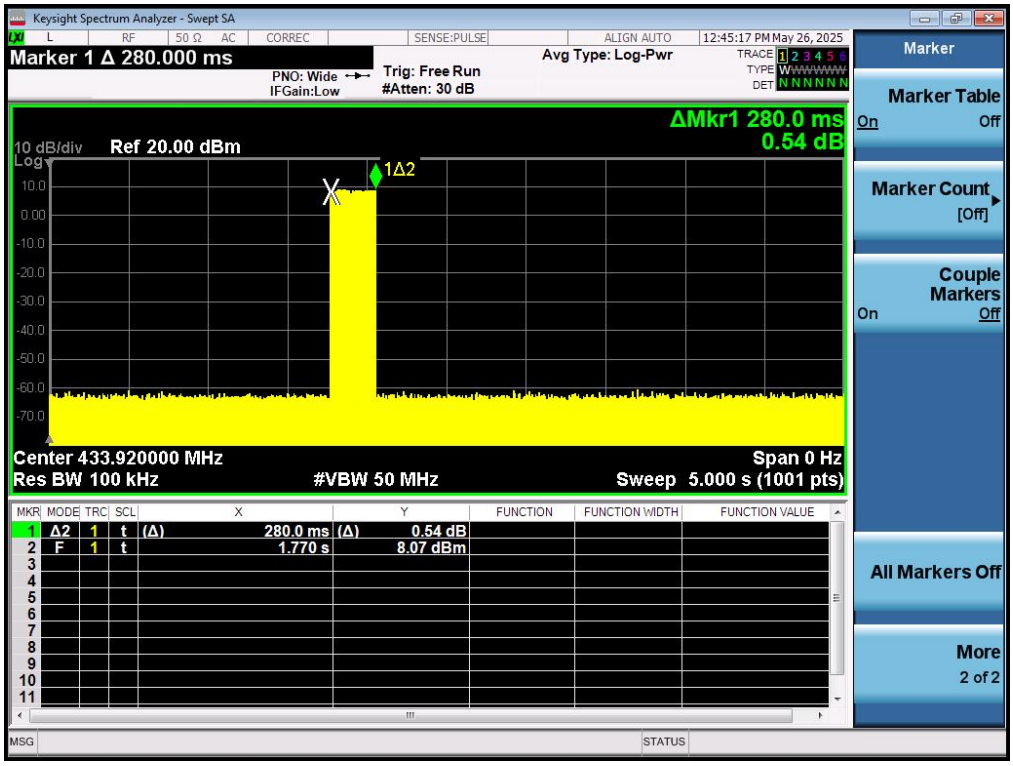

6. 20 DB BANDWIDTH TEST

6.1 LIMIT

The bandwidth of the emission shall be no wider than 0.25% of the center frequency of devices operation above 70MHz and below 900MHz.

6.2 TEST PROCEDURE

a. Connect EUT′ s antenna output to spectrum analyzer by RF cable.

b. The bandwidth of the fundamental frequency was measured by spectrum analyzer with 3kHz RBW and 10kHz VBW. The 20dB bandwidth is defined as the total spectrum the power of which is higher than peak power minus 20dB

6.3 TEST SETUP

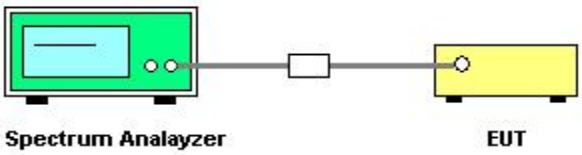

6.4 TEST RESULTS

Temperature:	25℃	Relative Humidity:	50%
Test Mode:	ASK	Test Voltage:	DC 12V

Frequency	20dB Bandwidth (KHz)	Limit(KHz)	Result
433.92 MHz	23.12	1084.8	PASS

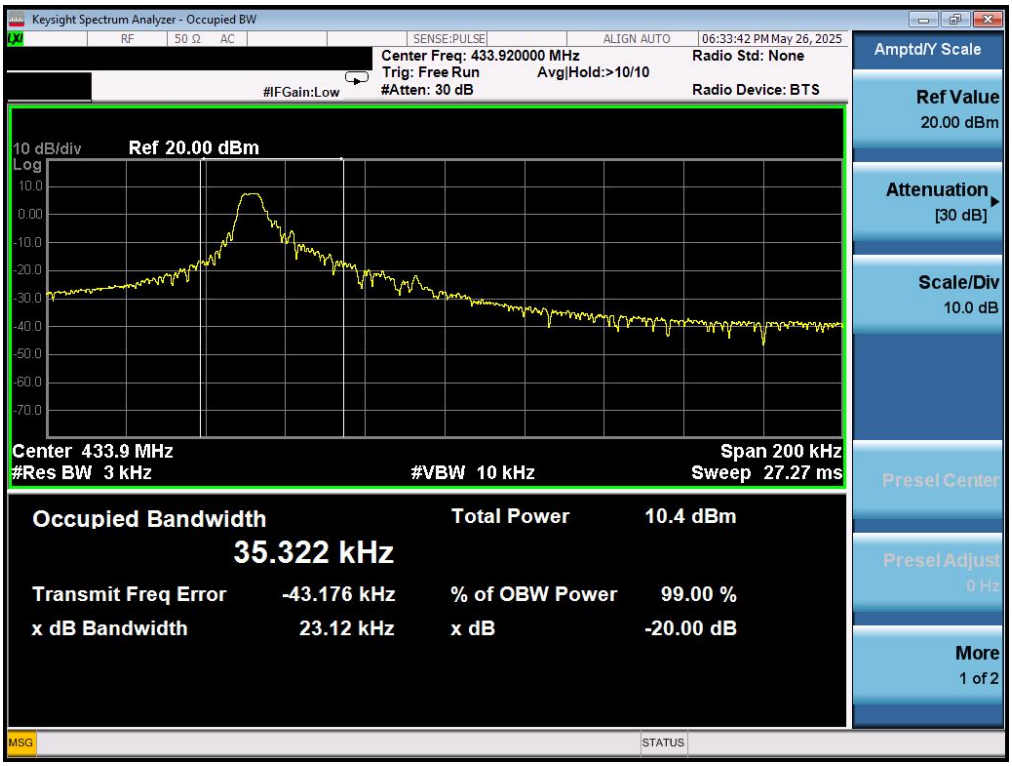

7. DUTY CYCLE

7.1 LIMIT

None: for reporting purposes only.

7.2 TEST PROCEDURE

a. Set the Centre frequency of the spectrum analyzer to the transmitting frequency;
Set the span=0MHz, RBW=1MHz, VBW=1MHz, Sweep time=200.00ms;
Trace mode = Single hold

7.3 TEST SETUP

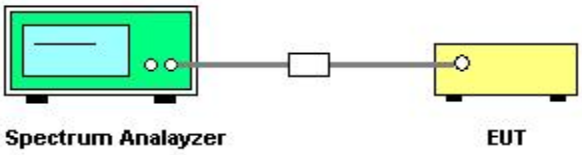

7.4 TEST RESULTS

Frequency	Duty Cycle
433.92 MHz	42.99%

The duty cycle is simply the on time divided by the period:
The duration of one cycle = 41.00 ms
Effective period of the cycle = 0.965*15+0.315*10=17.625ms
Duty Cycle = 17.625ms/41.00ms = 0.4299=42.99%
Duty Cycle Factor(dB)=20log (duty cycle(%))= -7.33dB

Original test data

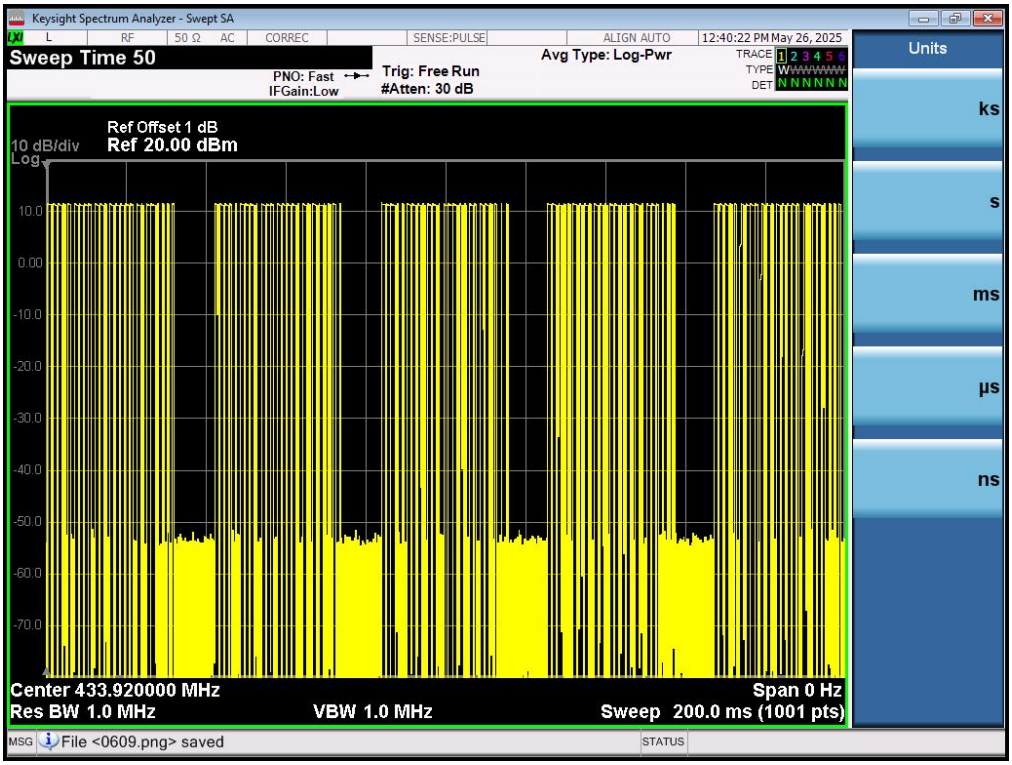

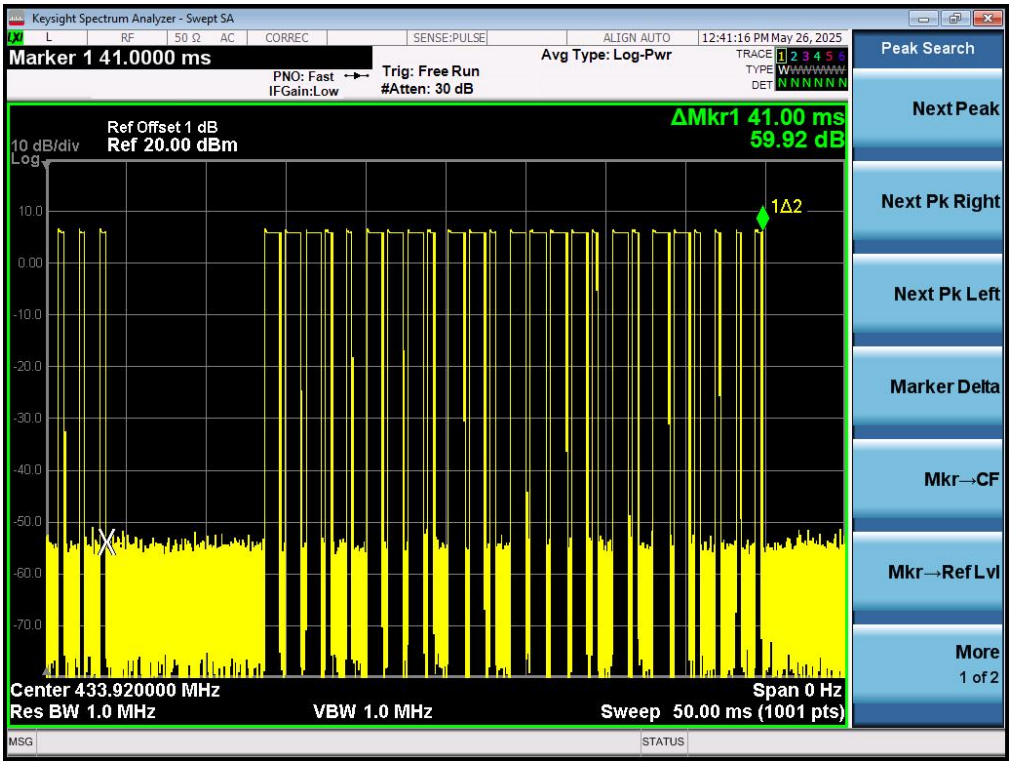
Keysight Spectrum Analyzer - Swept SA
Marker 1 41.0000 ms
PNO: Fast
IFGain:Low
Trig: Free Run
#Atten: 30 dB
Avg Type: Log-Pwr
12:41:16 PM May 26, 2025
Ref Offset 1 dB
10 dB/div
Ref 20.00 dBm
ΔMkr1 41.00 ms
59.92 dB
1Δ2
Center 433.920000 MHz
Res BW 1.0 MHz
VBW 1.0 MHz
Span 0 Hz
Sweep 50.00 ms (1001 pts)
Peak Search
Next Peak
Next Pk Right
Next Pk Left
Marker Delta
Mkr→CF
Mkr→Ref Lvl
More
1 of 2

Keysight Spectrum Analyzer - Swept SA
Marker 1 965.000 µs
PNO: Fast
IFGain:Low
Trig: Free Run
#Atten: 30 dB
Avg Type: Log-Pwr
12:41:52 PM May 26, 2025
Ref Offset 1 dB
10 dB/div
Ref 20.00 dBm
ΔMkr1 965.0 µs
-0.49 dB
1Δ2
Center 433.920000 MHz
Res BW 1.0 MHz
VBW 1.0 MHz
Span 0 Hz
Sweep 5.000 ms (1001 pts)
Peak Search
Next Peak
Next Pk Right
Next Pk Left
Marker Delta
Mkr→CF
Mkr→Ref Lvl
More
1 of 2

Keysight Spectrum Analyzer - Swept SA
L
RF
50 Ω AC
CORREC
SENSE:PULSE
ALIGN AUTO
12:42:10 PM May 26, 2025
Marker 1 315.000 µs
PNO: Fast
IFGain:Low
Trig: Free Run
#Atten: 30 dB
Avg Type: Log-Pwr
TRACE 1 2 3 4 5 6
TYPE W
DET N N N N N N
Ref Offset 1 dB
10 dB/div Ref 20.00 dBm
Log
ΔMkr1 315.0 µs
-0.48 dB
1Δ2
10.0
0.00
-10.0
-20.0
-30.0
-40.0
-50.0
-60.0
-70.0
Center 433.920000 MHz
Res BW 1.0 MHz
VBW 1.0 MHz
Span 0 Hz
Sweep 5.000 ms (1001 pts)
Peak Search
Next Peak
Next Pk Right
Next Pk Left
Marker Delta
Mkr→CF
Mkr→Ref Lvl
More
1 of 2
MSG
STATUS

8 ANTENNA REQUIREMENT

8.1 STANDARD REQUIREMENT

15.203 requirement: For intentional device, according to 15.203: an intentional radiator shall be designed to ensure that no antenna other than that furnished by the responsible party shall be used with the device.

8.2 EUT ANTENNA

The antennas used for this product are PCB antenna and other than that furnished by the responsible party shall be used with the device, the maximum peak gain of the transmit antenna is 0.58dBi.

※※※※※END OF THE REPORT※※※※※