TEST REPORT

Product Name : 15CH RF 433MHz Remote Control
Model Number : QSC215C
FCC ID : 2BP2O-QSC215C

Prepared for	:	Sena Software Solutions Ltd.
Address	:	3833 LAWRENCE PL.,NORTH VANCOUVER, BC V7K 2X1, CANADA
Prepared by	:	EMTEK (SHENZHEN) CO., LTD.
Address	:	Building 69, Majialong Industry Zone, Nanshan District, Shenzhen, Guangdong, China Tel: (0755) 26954280 Fax: (0755) 26954282

Report Number	:	ENS2505150261W00701R
Date(s) of Tests	:	May 16, 2025 to June 07, 2025
Date of issue	:	June 13, 2025

TEST RESULT CERTIFICATION

Applicant	:	Sena Software Solutions Ltd.
Address	:	3833 LAWRENCE PL.,NORTH VANCOUVER, BC V7K 2X1, CANADA
Manufacturer	:	Ningbo Futai IOT Technology Co.,LTD
Address	:	No. 199 Changxing road, Hongtang, Jiangbei District, Ningbo,China.
EUT	:	15CH RF 433MHz Remote Control
Model Name	:	QSC215C
Trademark	:	QuadS

Measurement Procedure Used:

APPLICABLE STANDARDS	
STANDARD	TEST RESULT
FCC 47 CFR Part 2, Subpart J FCC 47 CFR Part 15, Subpart C	PASS

The above equipment was tested by SHENZHEN EMTEK CO., LTD. The test data, data evaluation, test procedures, and equipment configurations shown in this report were made in accordance with the procedures given in ANSI C63.10 (2020) and the energy emitted by the sample EUT tested as described in this report is in compliance with the requirements of FCC Rules Part 2 and Part 15.231 REQUIREMENTS.

The test results of this report relate only to the tested sample identified in this report.

Date of Test	:	May 16, 2025 to June 07, 2025
Prepared by	:	Una Yu/Editor
Reviewer	:	Joe Xia/Supervisor
Approved & Authorized Signer	:	Lisa Wang/Manager

EMTEK (SHENZHEN) CO., LTD. TESTING

Modified Information

Version	Report No.	Revision Date	Summary
/	ENS2505150261W00701R	/	Original Report

Table of Contents

1 EUT TECHNICAL DESCRIPTION 5
2 SUMMARY OF TEST RESULT 6
3 TEST METHODOLOGY 7
3.1 GENERAL DESCRIPTION OF APPLIED STANDARDS 7
3.2 MEASUREMENT EQUIPMENT USED 7
3.3 DESCRIPTION OF TEST MODES 8
4 FACILITIES AND ACCREDITATIONS 9
4.1 FACILITIES 9
4.2 LABORATORY ACCREDITATIONS AND LISTINGS 9
5 TEST SYSTEM UNCERTAINTY 10
6 SETUP OF EQUIPMENT UNDER TEST 11
6.1 RADIO FREQUENCY TEST SETUP 1 11
6.2 RADIO FREQUENCY TEST SETUP 2 11
6.3 CONDUCTED EMISSION TEST SETUP 13
6.4 BLOCK DIAGRAM CONFIGURATION OF TEST SYSTEM 14
6.5 SUPPORT EQUIPMENT 14
7 TEST REQUIREMENTS 15
7.1 OCCUPIED BANDWIDTH 15
7.2 FREQUENCY STABILITY 17
7.3 RADIATED SPURIOUS EMISSION 18
7.4 TRANSMISSION REQUIREMENT 24
7.5 CONDUCTED EMISSION TEST 26
7.6 ANTENNA APPLICATION 27

1 EUT TECHNICAL DESCRIPTION

Characteristics	Description
Product:	15CH RF 433MHz Remote Control
Model Number:	QSC215C
Modulation:	OOK
Operating Frequency Range(s):	433.92 MHz
Number of Channels:	1 Channel
Max Transmit Power:	86.44 dBuV/m
Antenna Type :	PCB Antenna
Antenna gain	2 dBi
Power supply:	For Remote Control: DC 3V from Battery
Temperature Range	-40°C ~ +80°C

Note: *for more details, please refer to the User's manual of the EUT.*

2 SUMMARY OF TEST RESULT

FCC Part Clause	Test Parameter	Verdict	Remark
15.231(c)	Occupied Bandwidth	PASS	
15.231(d)	Frequency stability	N/A	
15.231(b)	Radiated Spurious Emissions	PASS	
15.231(a)	Transmission Requirement	PASS	
15.203	Antenna Requirement	PASS	
15.207(a)	Conducted Emission	N/A	
NOTE1: N/A (Not Applicable)			

RELATED SUBMITTAL(S) / GRANT(S):

This submittal(s) (test report) is intended for FCC ID: 2BP2O-QSC215C filing to comply with Section 15.231 of the FCC Part 15, Subpart C Rules

3 TEST METHODOLOGY

3.1 GENERAL DESCRIPTION OF APPLIED STANDARDS

According to its specifications, the EUT must comply with the requirements of the following standards:
FCC 47 CFR Part 2, Subpart J
FCC 47 CFR Part 15, Subpart C

3.2 MEASUREMENT EQUIPMENT USED

For Spurious Emissions Test

Equipment	Manufacturer	Model No.	Serial No.	Last Cal.	Cal. Interval
EMI Test Receiver	Rohde & Schwarz	ESU 26	100154	2025/1/9	1Year
Pre-Amplifie	Lunar EM	LNA30M3G-25	J10100000070	2025/1/9	1Year
Bilog Antenna	Schwarzbeck	VULB9163	661	2025/1/18	2 Year
Horn antenna	Schwarzbeck	BBHA9120D	9120D-1177	2023/8/28	2 Year
Pre-Amplifie	SKET	LNPA_0118G-45	SK2019051801	2025/1/9	1Year
Loop Antenna	Schwarzbeck	FMZB1519	1519-012	2025/1/13	2 Year
Spectrum Analyzer	Rohde & Schwarz	FSV40	100967	2025/1/9	1Year
Horn antenna	Schwarzbeck	BBHA9170	9170-399	2025/1/9	1Year
Coaxial Cable	TIMES	NmNm-7-C15702	N/A	2025/1/9	1Year
Coaxial Cable	TIMES	HF290-NMSM-6.5M	N/A	2025/1/13	2 Year
Coaxial Cable	TIMES	LMR-240 N-N	N/A	2025/1/9	1Year

For other test items:

Equipment	Manufacturer	Model No.	Serial No.	Last Cal.	Cal. Interval
Signal Analyzer	KEYSIGHT	N9010B	MY60240204	2025/1/07	1Year
RF Cable	Rosenberger	/	/	2025/1/9	1Year

3.3 DESCRIPTION OF TEST MODES

The EUT has been tested under its typical operating condition.
The EUT configuration for testing is installed on RF field strength measurement to meet the Commissions requirement and operating in a manner which intends to maximize its emission characteristics in a continuous normal application.

The Transmitter was operated in the normal operating mode. The TX frequency was fixed which was for the purpose of the measurements.

Test of channel included the lowest and middle and highest frequency to perform the test, then record on this report.

Pre-defined engineering program for regulatory testing used to control the EUT for staying in continuous transmitting mode is programmed.

Frequency and Channel list:

Channel	Frequency (MHz)	Channel	Frequency (MHz)	Channel	Frequency (MHz)
0	433.92			…	…

Test Frequency and Channel list:

Lowest Frequency		Middle Frequency		Highest Frequency	
Channel	Frequency (MHz)	Channel	Frequency (MHz)	Channel	Frequency (MHz)
0	433.92				

4 FACILITIES AND ACCREDITATIONS

4.1 FACILITIES

All measurement facilities used to collect the measurement data are located at

Building 69, Majialong Industry Zone District, Nanshan District, Shenzhen, China
The sites are constructed in conformance with the requirements of ANSI C63.7, ANSI C63.4 and CISPR Publication 22.

4.2 LABORATORY ACCREDITATIONS AND LISTINGS

Site Description

EMC Lab.	:	**Accredited by CNAS** The Certificate Registration Number is L2291. The Laboratory has been assessed and proved to be in compliance with CNAS-CL01 (identical to ISO/IEC 17025:2017) **Accredited by FCC** Designation Number: CN1204 Test Firm Registration Number: 882943 **Accredited by A2LA** The Certificate Number is 4321.01. **Accredited by Industry Canada** The Conformity Assessment Body Identifier is CN0008
Name of Firm	:	EMTEK (SHENZHEN) CO., LTD.
Site Location	:	Building 69, Majialong Industry Zone, Nanshan District, Shenzhen, Guangdong, China

5 TEST SYSTEM UNCERTAINTY

The following measurement uncertainty levels have been estimated for tests performed on the apparatus:

Parameter	Uncertainty
Radio Frequency	$\pm 1 \times 10^{-5}$
Maximum Peak Output Power Test	±1.0dB
Conducted Emissions Test	±2.0dB
Radiated Emission Test	±2.0dB
Power Density	±2.0dB
Occupied Bandwidth Test	±1.0dB
Band Edge Test	±3dB
All emission, radiated	±3dB
Antenna Port Emission	±3dB
Temperature	±0.5℃
Humidity	±3%

Measurement Uncertainty for a level of Confidence of 95%

6 SETUP OF EQUIPMENT UNDER TEST

6.1 RADIO FREQUENCY TEST SETUP 1

The component's antenna ports(s) of the EUT are connected to the measurement instrument per an appropriate attenuator. The EUT is controlled by PC/software to emit the specified signals for the purpose of measurements.

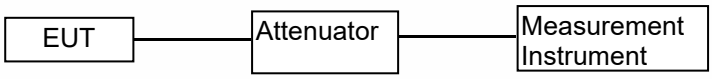

6.2 RADIO FREQUENCY TEST SETUP 2

The test site semi-anechoic chamber has met the requirement of NSA tolerance 4 dB according to the standards: ANSI C63.10. The test distance is 3m.The setup is according to the requirements in Section 13.1.4.1 of ANSI C63.10-2020 and CAN/CSA-CEI/IEC CISPR 22.
The maximal emission value is acquired by adjusting the antenna height, polarisation and turntable azimuth. Normally, the height range of antenna is 1 m to 4 m, the azimuth range of turntable is 0° to 360°, and the receive antenna has two polarizations Vertical (V) and Horizontal (H).

Below 30MHz：
The EUT is placed on a turntable 0.8 meters above the ground in the chamber, 3 meter away from the antenna (loop antenna). The Antenna should be positioned with its plane vertical at the specified distance from the EUT and rotated about its vertical axis for maximum response at each azimuth about the EUT. The center of the loop shall be 1 m above the ground. For certain applications, the loop antenna plane may also need to be positioned horizontally at the specified distance from the EUT.

Above 30MHz：
The EUT is placed on a turntable 0.8 meters above the ground in the chamber, 3 meter away from the antenna. The maximal emission value is acquired by adjusting the antenna height, polarisation and turntable azimuth. Normally, the height range of antenna is 1 m to 4 m, the azimuth range of turntable is 0° to 360°, and the receive antenna has two polarizations Vertical (V) and Horizontal (H).

Above 1GHz:
(Note: the FCC's permission to use 1.5m as an alternative per TCBC Conf call of Dec. 2, 2014.)
The EUT is placed on a turntable 1.5 meters above the ground in the chamber, 3 meter away from the antenna. The maximal emission value is acquired by adjusting the antenna height, polarisation and turntable azimuth. Normally, the height range of antenna is 1 m to 4 m, the azimuth range of turntable is 0° to 360°, and the receive antenna has two polarizations Vertical (V) and Horizontal (H).

(a) Radiated Emission Test Set-Up, Frequency Below 30MHz

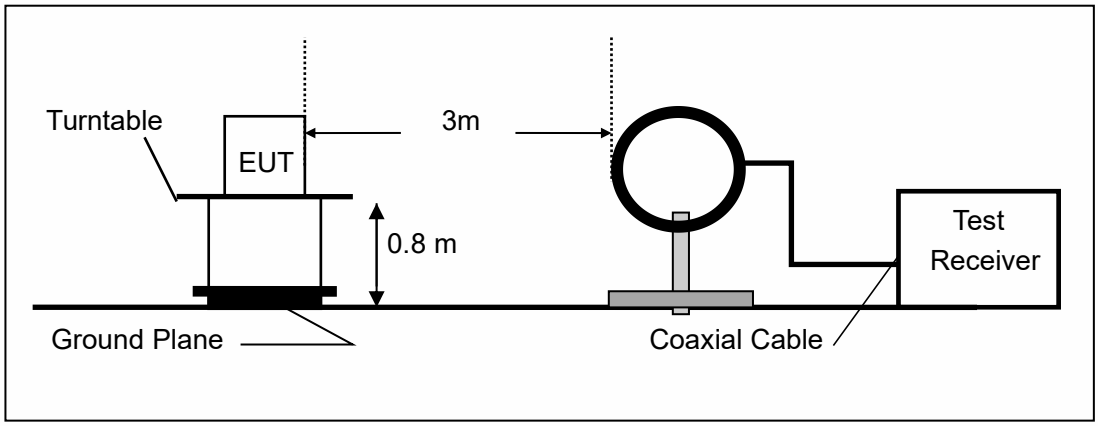

(b) Radiated Emission Test Set-Up, Frequency Below 1000MHz

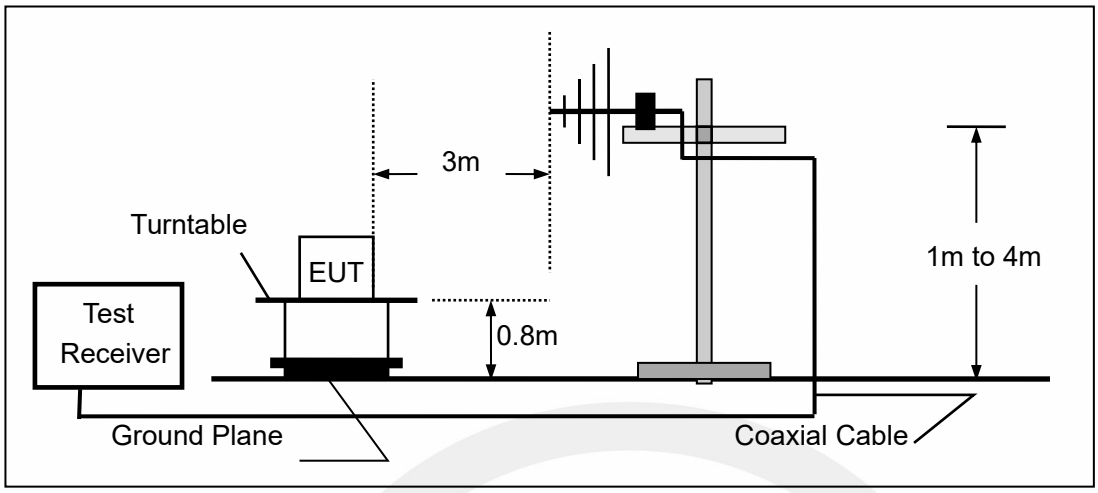

(c) Radiated Emission Test Set-Up, Frequency above 1000MHz

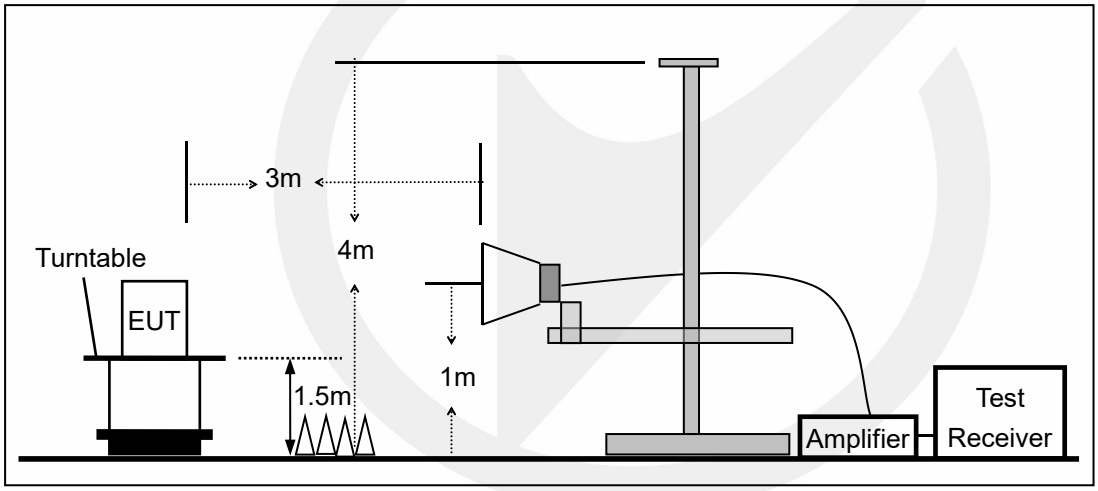

6.3 CONDUCTED EMISSION TEST SETUP

The mains cable of the EUT (maybe per AC/DC Adapter) must be connected to LISN. The LISN shall be placed 0.8 m from the boundary of EUT and bonded to a ground reference plane for LISN mounted on top of the ground reference plane. This distance is between the closest points of the LISN and the EUT. All other units of the EUT and associated equipment shall be at least 0.8m from the LISN.

Ground connections, where required for safety purposes, shall be connected to the reference ground point of the LISN and, where not otherwise provided or specified by the manufacturer, shall be of same length as the mains cable and run parallel to the mains connection at a separation distance of not more than 0.8 m.

According to the requirements in ANSI C63.10-2020 Conducted emissions from the EUT measured in the frequency range between 0.15 MHz and 30 MHz using CISPR Quasi-Peak and average detector mode.

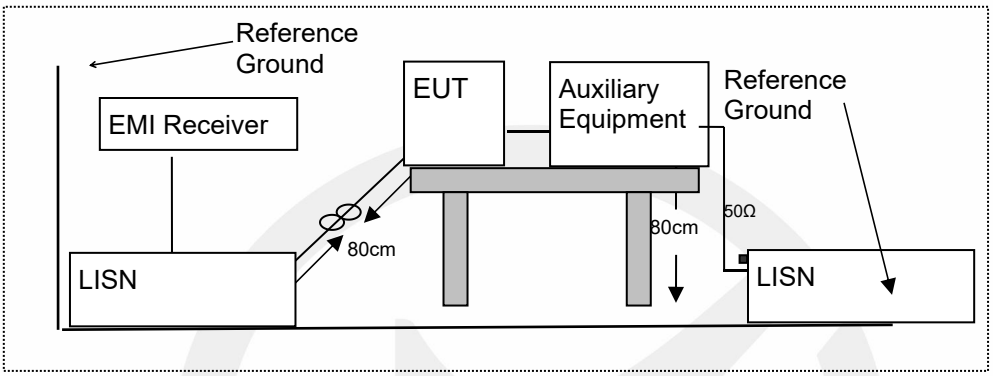

6.4 BLOCK DIAGRAM CONFIGURATION OF TEST SYSTEM

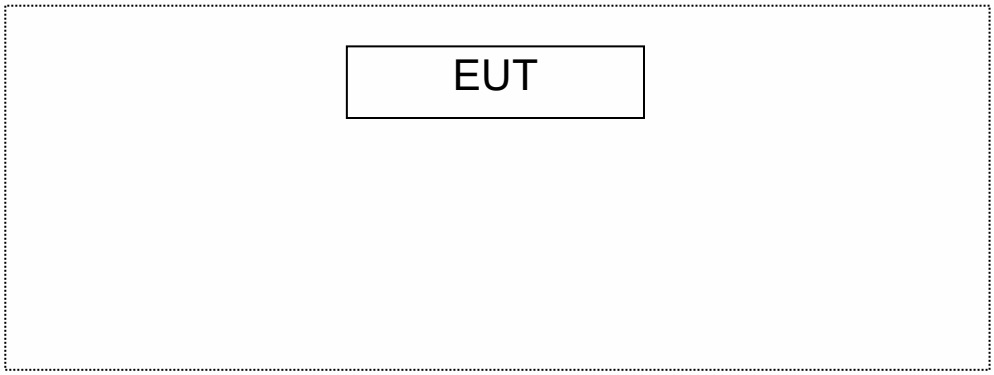

6.5 SUPPORT EQUIPMENT

EUT Cable List and Details			
Cable Description	Length (m)	Shielded/Unshielded	With / Without Ferrite
/	/	/	/

Auxiliary Cable List and Details			
Cable Description	Length (m)	Shielded/Unshielded	With / Without Ferrite
/	/	/	/

Auxiliary Equipment List and Details			
Description	Manufacturer	Model	Serial Number
/	/	/	/

Notes:

1. *All the equipment/cables were placed in the worst-case configuration to maximize the emission during the test.*
2. *Grounding was established in accordance with the manufacturer's requirements and conditions for the intended use.*

7 TEST REQUIREMENTS

7.1 OCCUPIED BANDWIDTH

7.1.1 Applicable Standard
According to FCC Part 2.1049 and part 15.231(c)

7.1.2 Conformance Limit
The bandwidth of the emission shall be no wider than 0.25% of the center frequency for devices operating above 70 MHz and below 900 MHz. For devices operating above 900 MHz, the emission shall be no wider than 0.5% of the center frequency. Bandwidth is determined at the points 20 dB down from the modulated carrier.

7.1.3 Test Configuration
Test according to clause 6.1 radio frequency test setup 1

7.1.4 Test Procedure
The EUT was operating in transmit mode and controlled its channel. Printed out the test result from the spectrum by hard copy function.
The RF output of EUT was connected to the spectrum analyzer by RF cable and attenuator. The path loss was compensated to the results for each measurement.
Set to the maximum power setting and enable the EUT transmit continuously
Set RBW =100 kHz.
Set the video bandwidth (VBW) =300 kHz.
Set Span= approximately 2 to 3 times the occupied bandwidth
Set Detector = Peak.
Set Trace mode = max hold.
Set Sweep = auto couple.
The EUT should be transmitting at its maximum data rate. Allow the trace to stabilize. Use the marker-to-peak function to set the marker to the peak of the emission. Use the marker-delta function to measure 20 dB down one side of the emission. Reset the markerdelta function, and move the marker to the other side of the emission, until it is (as close as possible to) even with the reference marker level. The marker-delta reading at this point is the 20 dB bandwidth of the emission.
If this value varies with different modes of operation (e.g., data rate, modulation format, etc.), repeat this test for each variation.
Measure and record the results in the test report.

Test Results

Temperature:	23° C
Relative Humidity:	53%
ATM Pressure:	1011 mbar

Modulation Mode	Channel Frequency (MHz)	Measurement Bandwidth (kHz)	Limit (kHz)	Verdict
OOK	433.92	41	≤1084.8	PASS
Note: Limit=0.25% of the center frequency=433.92MHz * 0.25% = 1.0848MHz				

Test Model	Occupied Bandwidth Frequency: 433.92 MHz	OOK Modulation

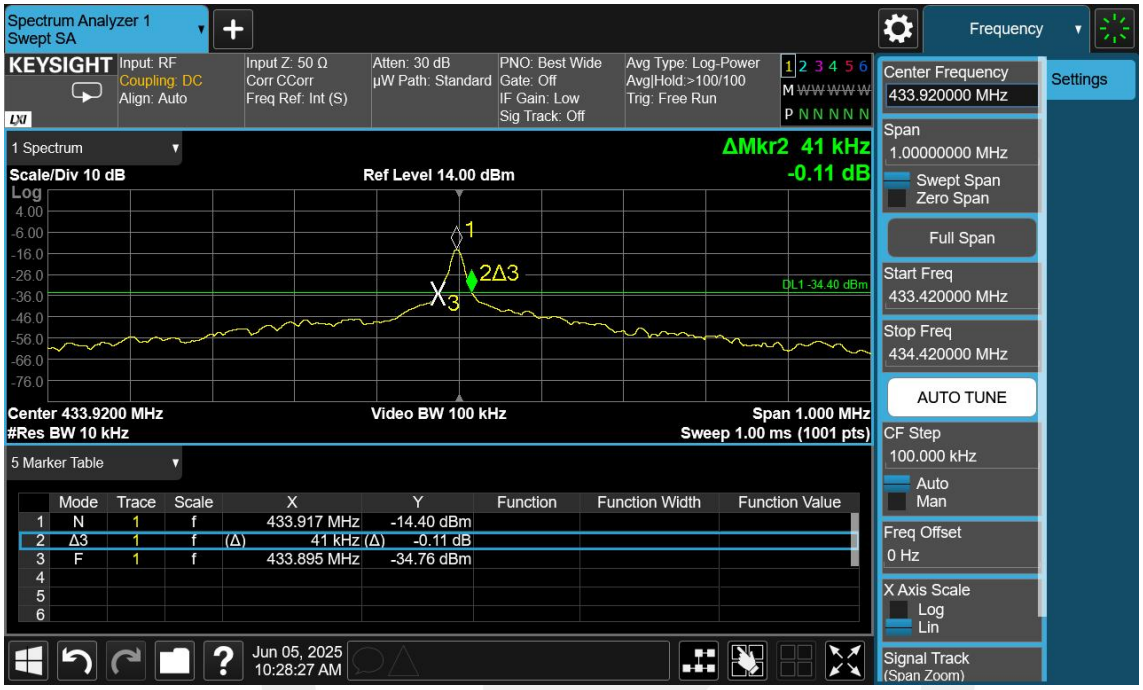

7.2 FREQUENCY STABILITY

7.2.1 Applicable Standard

According to FCC Part 2.1055 and part 15.231(d)

7.2.2 Conformance Limit

According to part 15.231(d), For devices operating within the frequency band 40.66-40.70 MHz, the bandwidth of the emission shall be confined within the band edges and the frequency tolerance of the carrier shall be ±0.01%. This frequency tolerance shall be maintained for a temperature variation of −20 degrees to +50 degrees C at normal supply voltage, and for a variation in the primary supply voltage from 85% to 115% of the rated supply voltage at a temperature of 20 degrees C. For battery operated equipment, the equipment tests shall be performed using a new battery

7.2.3 Test Configuration

Test according to clause 6.1 radio frequency test setup

7.2.4 Test Procedures

Connect the EUT to frequency analyzer via the antenna connector.
EUT was placed at temperature chamber and connected to an external power supply.
Temperature and voltage condition shall be tested to confirm frequency stability.
(a) Frequency measurements shall be made at the extremes of the specified temperature range and at intervals of not more than 10° centigrade through the range. A period of time sufficient to stabilize all of the components of the oscillator circuit at each temperature level shall be allowed prior to frequency measurement. The short-term transient effects on the frequency of the transmitter due to keying (except for broadcast transmitters) and any heating element cycling normally occurring at each ambient temperature level also shall be shown. Only the portion or portions of the transmitter containing the frequency determining and stabilizing circuitry need be subjected to the temperature variation test.
(b) The frequency stability shall be measured with variation of primary supply voltage as follows:
(1) Vary primary supply voltage from 85 to 115 percent of the nominal value for other than hand carried battery equipment.
(2) For hand carried, battery powered equipment, reduce primary supply voltage to the battery operating end point, which shall be specified by the manufacturer.

7.2.5 Test Results

N/A
Note: Not applicable, the device operating without the frequency band 40.66-40.70MHz.

7.3 RADIATED SPURIOUS EMISSION

7.3.1 Applicable Standard

According to FCC Part 15.231(b) and 15.209

7.3.2 Conformance Limit

Intentional radiators may operate at a periodic rate exceeding that specified in paragraph (a) of this section and may be employed for any type of operation, including operation prohibited in paragraph (a) of this section, provided the intentional radiator complies with the provisions of paragraphs (b) through (d) of this section, except the field strength table in paragraph (b) of this section is replaced by the following:
According to FCC Part 15.231 the field strength Limited

Frequencies (MHz)	Field strength of fundamental @3m		Effective limit for 433.92MHz	
	(uV/m)	dB(uV/m)	(uV/m)	dB(uV/m)
40.66-40.70	2250	67		
70-130	1250	62		
130-174	1250 to 3750*	62 to 71.5*		
174-260	3750	71.5		
260-470	**3750 to 12500***	**71.5 to 81.9***	**10996.67**	**80.83**
Above 470	12500	81.9		

* Linear interpolation

Frequencies (MHz)	Field strength of Spurious emissions @3m		Effective limit for 433.92MHz	
	(uV/m)	dB(uV/m)	(uV/m)	dB(uV/m)
40.66-40.70	225	47		
70-130	125	41.9		
130-174	125 to 375*	41.9 to 51.5*		
174-260	375	51.5		
260-470	**375 to 1250***	**51.5 to 61.9***	**1099.67**	**60.83**
Above 470	1250	61.9		

* Linear interpolation

The field intensity in micro-volts per meter can then be determined by the following equation: FI(V/ m) = 10FI (dBV/ m) / 20 The FCC specified emission limits were calculated according the EUT operating frequency and obtained by following linear interpolation equations:

(a) For fundamental frequency:

f_{EUT} : EUT Operating Frequency Emission Limit (V/m)

$$= [fEUT(MHz) - 260(MHz)] \times \frac{12500(V/m) - 3750(V/m)}{470(MHz) - 260(MHz)} + 3750(V/m)$$

(b) For spurious frequencies:

f_{EUT} : EUT Operating Frequency Emission Limit (V/m)

$$= [f_{EUT}(MHz) - 260(MHz)] \times \frac{1250(V/m) - 375(V/m)}{470(MHz) - 260(MHz)} + 375(V/m)$$

Other emissions radiated outside of the specified frequency bands, except for harmonics, shall be attenuated by at least 20 dB below the level of the fundamental or comply with the radiated emissions limits specified in section 1 5.209(a) limit in the table below has to be followed.

Note:

(1) The tighter limit applies at the band edges.

(2) Emission level (dBuV/m)=20log Emission level (uV/m).

FCC Part15 (15.231) , Subpart C		
Fundamental Frequency	Field Strength Of Fundamental	Field Strength of Spurious Emissions
433.92MHz	AV:80.83 dBuV/m at 3m distance	AV:60.83 dBuV/m at 3m distance
	PK:100.83dBuV/m at 3m distance	PK:80.83 dBuV/m at 3m distance

According to FCC Part15.205, Restricted bands

MHz	MHz	MHz	GHz
0.090-0.110	16.42-16.423	399.9-410	4.5-5.15
10.495-0.505	16.69475-16.69525	608-614	5.35-5.46
2.1735-2.1905	16.80425-16.80475	960-1240	7.25-7.75
4.125-4.128	25.5-25.67	1300-1427	8.025-8.5
4.17725-4.17775	37.5-38.25	1435-1626.5	9.0-9.2
4.20725-4.20775	73-74.6	1645.5-1646.5	9.3-9.5
6.215-6.218	74.8-75.2	1660-1710	10.6-12.7
6.26775-6.26825	123-138	2200-2300	14.47-14.5
8.291-8.294	149.9-150.05	2310-2390	15.35-16.2
8.362-8.366	156.52475-156.52525	2483.5-2500	17.7-21.4
8.37625-8.38675	156.7-156.9	2690-2900	22.01-23.12
8.41425-8.41475	162.0125-167.17	3260-3267	23.6-24.0
12.29-12.293	167.72-173.2	3332-3339	31.2-31.8
12.51975-12.52025	240-285	3345.8-3358	36.43-36.5
12.57675-12.57725	322-335.4	3600-4400	(2)
13.36-13.41			

According to FCC Part15.205, the level of any transmitter spurious emission in Restricted bands shall not exceed the level of the emission specified in the following table

Restricted Frequency(MHz)	Field Strength (μV/m)	Field Strength (dBμV/m)	Measurement Distance
0.009~0.490	2400/F(KHz)	300	See the remark
0.490~1.705	24000/F(KHz)	30	
1.705~30.0	30	30	
30-88	100	40	3
88-216	150	43.5	3
216-960	200	46	3
Above 960	500	54	3

Remark :1. Emission level in dBuV/m=20 log (uV/m)
2. Measurement was performed at an antenna to the closed point of EUT distance of meters.
3. Distance extrapolation factor =40log(Specific distance/ test distance)(dB);
Limit line=Specific limits(dBuV) + distance extrapolation factor.
for the frequency ranges below 30 MHz, a narrower RBW is used for these ranges but the measured value should add a RBW correction factor (RBWCF) where RBWCF [dB] =10*lg(100 [kHz]/narrower RBW [kHz]). , the narrower RBW is 1 kHz and RBWCF is 20 dB for the frequency 9 kHz to 150 kHz, and the narrower RBW is 10 kHz and RBWCF is 10 dB for the frequency 150 kHz to 30 MHz.

7.3.3 Test Configuration

Test according to clause 6.2 radio frequency test setup 2

7.3.4 Test Procedure

This test is required for any spurious emission that falls in a Restricted Band, as defined in Section 15.205. It must be performed with the highest gain of each type of antenna proposed for use with the EUT. Use the following spectrum analyzer settings:
The EUT was placed on a turn table which is 0.8m above ground plane.
Maximum procedure was performed on the highest emissions to ensure EUT compliance.
Span = wide enough to fully capture the emission being measured
RBW = 100 kHz for f < 1 GHz(30MHz to 1GHz), 200Hz for f<150KHz(9KHz to 150KHz), 9KHz for f<30MHz(150KHz to 30MHz),1MHz for f<5GHz
VBW ≥ RBW Sweep = auto
Detector function = peak
Trace = max hold
Follow the guidelines in ANSI C63.10-2020 with respect to maximizing the emission by rotating the EUT, measuring the emission while the EUT is situated in three orthogonal planes (if appropriate), adjusting the measurement antenna height and polarization, etc. A pre-amp and a high pass filter are required for this test, in order to provide the measuring system with sufficient sensitivity. Allow the trace to stabilize. The peak reading of the emission, after being corrected by the antenna factor, cable loss, pre-amp gain, etc., is the peak field strength, which must comply with the limit specified in Section 15.35(b). Submit this data.
Now set the VBW to 10 Hz, while maintaining all of the other instrument settings. This peak level, once corrected, must comply with the limit specified in Section 15.209. If the dwell time per channel of the hopping signal is less than 100 ms, then the reading obtained with the 10 Hz VBW may be further adjusted by a “duty cycle correction factor”, derived from 20log(dwell time/100 ms), in an effort to demonstrate compliance with the 15.209 limit. Submit this data.

- Calculation of Average factor

The output field strengths of specification in accordance with the FCC rules specify measurements with an average detector. During the test, a spectrum analyzer incorporating a peak detector was used. Therefore, a reduction factor can be applied to the resultant peak signal level and compared to the limit for measurement instrumentation incorporating an average detector.
The duty cycle is measured in 100ms or the repetition cycle period, whichever is a shorter time frame, the duty cycle is measured by placing the spectrum analyzer to set zero span at 100kHz resolution bandwidth.
Averaging factor in dB=20log (duty cycle)
Repeat above procedures until all frequency measured was complete.

Temperature:	23° C
Relative Humidity:	53%
ATM Pressure:	1011 mbar

7.3.5 Test Results

■ Duty cycle measure

Test Model	Duty cycle measure	
	Frequency: 433.92MHz	transmission period

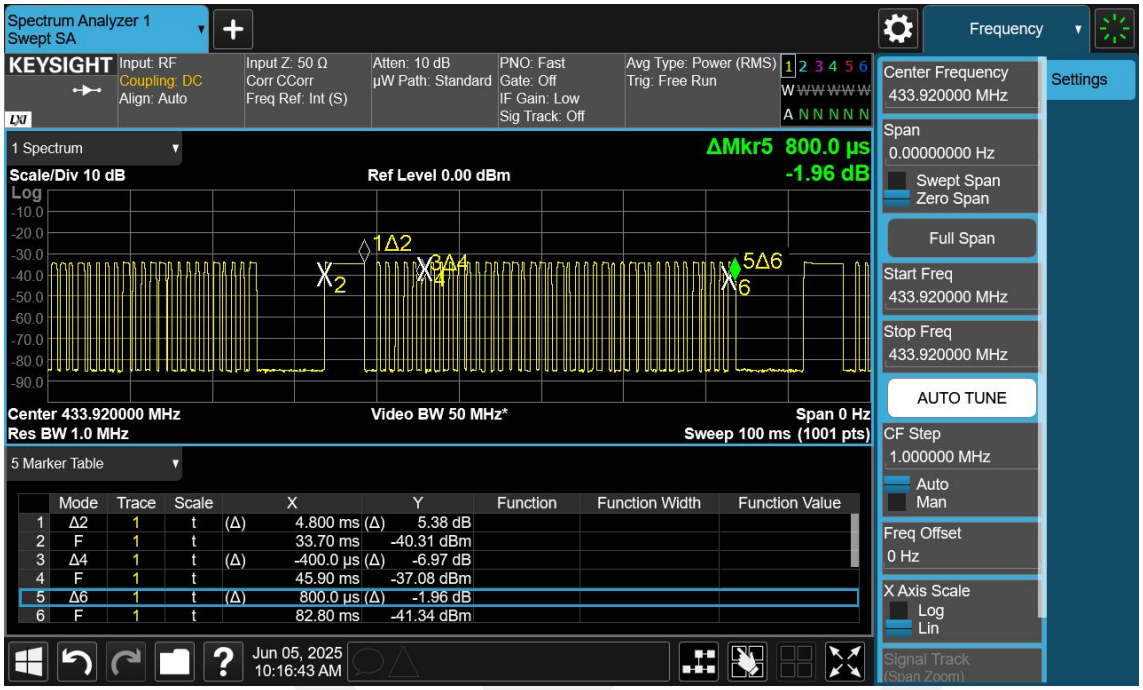

Duty cycle=(4.8*2)ms+(0.4*43)ms+(0.8*19)ms/50ms=42%

■ Spurious Emission below 30MHz (9KHz to30MHz)

Test mode: TX Mode

Freq. (MHz)	Ant.Pol. H/V	Emission Level(dBuV/m)		Limit 3m(dBuV/m)		Over(dB)	
		PK	AV	PK	AV	PK	AV
--	--	--	--	--	--	--	--

Note: the amplitude of spurious emission that is attenuated by more than 20dB below the permissible limit has no need to be reported.
Distance extrapolation factor =40log(Specific distance/ test distance)(dB);
Limit line=Specific limits(dBuV) + distance extrapolation factor

■ Radiated spurious emission

Operation Mode: 433.92MHz

Freq. (MHz)	Reading (dBμV/m)	Corr. (dB)	Meas. (dBμV/m)	Limit (dBμV/m)	Margin (dB)	Det.	Pol.	Verdict
1953.688	47.68	-12.03	35.65	74.00	38.35	PK+	H	PASS
1953.688	39.17	-12.03	27.14	54.00	26.86	AVG	H	PASS
2189.938	48.11	-11.46	36.65	74.00	37.35	PK+	H	PASS
2189.938	39.58	-11.46	28.12	54.00	25.88	AVG	H	PASS
2443.188	49.03	-9.87	39.16	74.00	34.84	PK+	H	PASS
2443.188	38.99	-9.87	29.12	54.00	24.88	AVG	H	PASS
2707.063	49.13	-8.86	40.27	74.00	33.73	PK+	H	PASS
2707.063	39.30	-8.86	30.44	54.00	23.56	AVG	H	PASS
2945.063	48.81	-7.59	41.22	74.00	32.78	PK+	H	PASS
2945.063	38.83	-7.59	31.24	54.00	22.76	AVG	H	PASS
3811.000	47.79	-11.58	36.21	74.00	37.79	PK+	H	PASS
3811.000	39.84	-11.58	28.26	54.00	25.74	AVG	H	PASS
2072.438	39.41	-11.97	27.44	54.00	26.56	AVG	V	PASS
2439.250	50.57	-9.89	40.68	74.00	33.32	PK+	V	PASS
2439.250	40.11	-9.89	30.22	54.00	23.78	AVG	V	PASS
2684.938	49.36	-9.16	40.20	74.00	33.80	PK+	V	PASS
2684.938	40.28	-9.16	31.12	54.00	22.88	AVG	V	PASS
2814.563	48.90	-8.44	40.46	74.00	33.54	PK+	V	PASS
2814.563	39.56	-8.44	31.12	54.00	22.88	AVG	V	PASS
2951.063	48.87	-7.57	41.30	74.00	32.70	PK+	V	PASS
2951.063	38.79	-7.57	31.22	54.00	22.78	AVG	V	PASS
3679.500	50.50	-12.13	38.37	74.00	35.63	PK+	V	PASS
3679.500	40.24	-12.13	28.11	54.00	25.89	AVG	V	PASS

Freq. (MHz)	Reading (dBμV)	Corr. (dB)	Meas. (dBμV/m)	Limit (dBμV/m)	Margin (dB)	Det.	Pol.	Verdict
80.052	42.10	-26.65	15.45	40.00	24.55	PK+	H	PASS
152.026	42.24	-26.83	15.41	43.50	28.09	PK+	H	PASS
198.101	40.74	-24.41	16.33	43.50	27.17	PK+	H	PASS
596.286	39.39	-14.42	24.97	46.00	21.03	PK+	H	PASS
867.886	57.32	-11.52	45.80	46.00	0.20	PK+	H	PASS
50.661	39.86	-23.9	15.96	40.00	24.04	PK+	V	PASS
80.052	44.89	-26.65	18.24	40.00	21.76	PK+	V	PASS
101.004	40.42	-24.37	16.05	43.50	27.45	PK+	V	PASS
152.026	43.05	-26.83	16.22	43.50	27.28	PK+	V	PASS
867.886	42.65	-11.52	31.13	46.00	14.87	PK+	V	PASS

Freq.	Ant.Pol.	Emission Level(dBuV/m)			Limit 3m(dBuV/m)		Margin(dB)	
(MHz)	H/V	PK	Factor(dB)	AV	PK	AV	PK	AV
433.92	H	86.44	-7.53	78.91	100.83	80.83	14.39	1.92
433.92	V	82.99	-7.53	75.46	100.83	80.83	17.84	5.37

Note:
Averaging factor in dB=20log (duty cycle)
20log (Duty cycle) =20log (0.42)=-7.53 dB

7.4 TRANSMISSION REQUIREMENT

7.4.1 Applicable Standard

According to FCC Part 15.231 (a),

7.4.2 Conformance Limit

1) A manually operated transmitter shall employ a switch that will automatically deactivate the transmitter within not more than 5 seconds of being released.
2) A transmitter activated automatically shall cease transmission within 5 seconds after activation.
3) Periodic transmissions at regular predetermined intervals are not permitted. However, polling or supervision transmissions, including data, to determine system integrity of transmitters used in security or safety applications are allowed if the total duration of transmissions does not exceed more than two seconds per hour for each transmitter. There is no limit on the number of individual transmissions, provided the total transmission time does not exceed two seconds per hour.

7.4.3 Test Configuration

Test according to clause 6.2 radio frequency test setup 2

7.4.4 Test Procedure

The following table is the setting of spectrum analyzer.

Spectrum analyzer	Setting
Attenuation	Auto
Span Frequency	0Hz
RB	100KHz
VB	300KHz
Detector	Peak
Trace	Max hold
Sweep Time	6S

a. The transmitter output (antenna port) was connected to the spectrum analyzer.
b. Set RBW of spectrum analyzer to 100KHz and VBW to 300KHz, Set Detector to Peak, Trace to Max Hold.
c. Set the span to 0Hz and the sweep time to 20s and record the value.

7.4.5 Test Results

Temperature:	23° C
Relative Humidity:	53%
ATM Pressure:	1011 mbar

Frequency.(MHz)	Transmission Time seconds	Limit seconds	Verdict
433.92	0.570	5	PASS

Test Model	Transmitter Requirement	
	Frequency: 433.92MHz	Silent Time

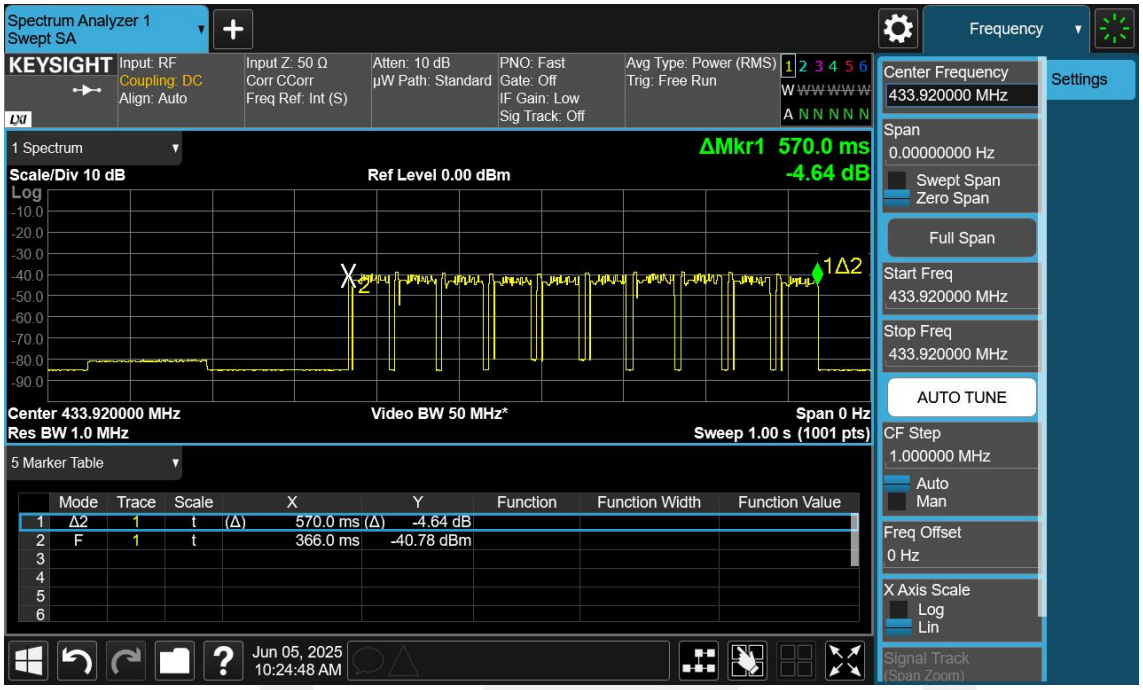

7.5 CONDUCTED EMISSION TEST

7.5.1 Applicable Standard

According to FCC Part 15.207(a)

7.5.2 Conformance Limit

Conducted Emission Limit		
Frequency(MHz)	Quasi-peak	Average
0.15-0.5	66-56	56-46
0.5-5.0	56	46
5.0-30.0	60	50
Note: 1. The lower limit shall apply at the transition frequencies 2. The limit decreases in line with the logarithm of the frequency in the range of 0.15 to 0.50MHz.		

7.5.3 Test Configuration

Test according to clause 7.3 conducted emission test setup

7.5.4 Test Procedure

The EUT was placed on a table which is 0.8m above ground plane.
Maximum procedure was performed on the highest emissions to ensure EUT compliance.
Repeat above procedures until all frequency measured were complete.

7.5.5 Test Results

N/A.
Note: The EUT DC power only.

7.6 Antenna Application

7.6.1 Antenna Requirement

Standard	Requirement
FCC CRF Part 15.203	An intentional radiator shall be designed to ensure that no antenna other than that furnished by the responsible party shall be used with the device. The use of a permanently attached antenna or of an antenna that uses a unique coupling to the intentional radiator shall be considered sufficient to comply with the provisions of this section. The manufacturer may design the unit so that a broken antenna can be replaced by the user, but the use of a standard antenna jack or electrical connector is prohibited. This requirement does not apply to carrier current devices or to devices operated under the provisions of §15.211, §15.213, §15.217, §15.219, or §15.221. Further, this requirement does not apply to intentional radiators that must be professionally installed, such as perimeter protection systems and some field disturbance sensors, or to other intentional radiators which, in accordance with §15.31(d), must be measured at the installation site. However, the installer shall be responsible for ensuring that the proper antenna is employed so that the limits in this part are not exceeded.

For intentional device, according to FCC 47 CFR Section 15.203, an intentional radiator shall be designed to ensure that no antenna other than that furnished by the responsible party shall be used with the device.

7.6.2 Result

PASS

☒ Antenna use a permanently attached antenna which is not replaceable.
☐ Not using a standard antenna jack or electrical connector for antenna replacement
☐ The antenna has to be professionally installed (please provide method of installation)
Note: Please refer to the attached document Internal Photos to show the antenna connector.

*** End of Report ***