Rock Build, Code Future

Start from blocks to code,the smart build journey

KIDROCK 百变小珂

爱“拼”才会赢

6~16+ Ages/ages

一拼一搭,从物理组装到智能编程

型号: K01-A

KIDROCK 百变小珂

1 Choking Hazard (Small Parts)

·This toy contains small plastic connectors, screws and components.
·Not suit able for children under 3 years old.
·Keep the toy out of reach of infants and young children.
·Adult supervision is required during assembly and play at all times.
·Before use, ensure all components are firmly fixed.
·Regularly check if components are loose or damaged.

2 The danger of high-voltage lithium-ion battery packs

(I) Electric Shock and Fire Hazards

1.Voltage Parameters

·Rated voltage: 11.1V DC ·Maximum voltage: 12.6V DC

2.Prohibited Behaviors

·It is strictly prohibited to use metal tools or other conductors to short-circuit the battery electrodes.
·Do not expose the battery to a high temperature environment above 60°C(140°F), such as direct sunlight or near heating equipment.

(II) Usageand Operation Prohibitions

1.It is prohibited to disassemble, squeeze, puncture, or physically deform the battery pack.
2.It is strictly forbidden to use batteries that are bulging, damaged, orleaking, and should be transferred to a fireproof container immediately if any abnormalities are found.
3.It is forbidden to mix with other models and specifications of batteries.

(III) Charging Safety Standards

1.Must use the original factory matching 12.6V 3S lithium battery charger.
2.The maximum charging time at a time shall not exceed 4 hours, and the power supply shall be disconnected immediately after full charge.
3.Charging should be carried out in a well-ventilated area,away from flammable materials.

(IV) Handling of emergencies

If the battery leaks, smokes, or fires:

1.Evacuate on-site personnel immediately.
2.Use Class D dry powder fire extinguishers or sand cover to extinguish fires, and water-based fire extinguishers are strictly prohibited.
3.Contact the fire and emergency management department immediately.

(V) Special Risk Prevention Measures

Risk Types Specific Preventive Measures

Thermal Runaway When the surface temperature of the battery exceeds 45°C(113°F), immediately stop using and coolnaturally

Children's access The battery compartment must be opened with a tool such a sascrewdriver to ensure that children cannot directly reach the battery

Transport safety The transport process must comply with UN38.3 standards and PI 965 packaging specifications to prevent crushing collisions

Disposal Must be sent to aqualified e-waste recycling point, and it is forbidden to mix it with household waste for disposal

(VI) Compliance and LegalStatement

1.Safety Standards: This battery pack complies with the IEC 62133 -2:2017 international safetystandard and GB 31241 -2014 “Safety Reguirements for Lithium - Ion Batteries for PortableElectronic Products”
2.Risk Warning: Improper use may lead to electrolyte leakage, fire or explosion, causing seriouspersonal injury and property loss.

Special Notice: The 11.1V voltage described in this manual is significantly higher than that ofconventional toy batteries (1.5 - 7.4V). Strictly follow safety regulations during operation to avoid electric shock and fire risks.
Liability Statement: The manufacturer shall not be liable for any losses caused by non - compliancewith the provisions of this manual

3 Risk of Fire/Explosion/Chemical Burn

- Only use specified battery types (e.g., 2 pieces of 1.5V AA batteries).
- Correctly install the positive (+) and negative (-) poles of the batteries.
- Do not mix old and new batteries or batteries of different brands.
- Do not charge non - rechargeable batteries.
- Remove the batteries if not in use for a long time.
- If a battery is accidentally swallowed, seek medical attention immediately.
- Avoid short - circuiting, squeezing the batteries, or exposing them to fire/water sources.
- Dispose of used batteries in accordance with local regulations.

4 Risk of Electric Shock/Fire/Corrosion

This toy is not waterproof.

- Do not use it in rainy/snowy weather, humid areas (standing water, grass), or near swimming pools.
- Do not clean electronic components with water or liquids.

If the toy comes into contact with liquid:

1. Turn off the power immediately;
2. Remove the batteries;
3. Wipe dry with a clean cloth;
4. Let it air - dry for more than 48 hours before reuse.

5 Risk of Crushing/Cutting

- Keep hands, hair, and clothing away from wheels/gears during operation.
- Only use it in open and flat areas, away from stairs and roads.
- Check for burrs on metal edges before use; grind smooth if necessary.
- Maintain a safe distance during remote - controlled or automatic operation.

6 Safety During Assembly

- This product must be assembled by an adult or by a child under the direct supervision and guidance of an adult.
- Assemble on a well - lit and tidy workbench to avoid losing small parts.
- Follow the manual steps carefully to ensure all connections are firm and reliable. Incorrect assembly may cause unstable operation or parts to fall off, increasing risks.
- Pay attention to the direction and angle of force during assembly to prevent parts from slipping or flying out and causing eye or body injuries. It is recommended to wear safety goggles.
- This product has an aluminum alloy structure and is relatively heavy. Do not drop it from a height to avoid injury or damage.

- Avoid high temperatures (exceeding 40°C/104°F) or contact with chemicals.
- Store in a dry and cool place.
- Recommended for children aged 8 and above

7 Warning: Electronic Safety and Interference Risks! (RemoteControl and Programming)

1.Wireless Signal Interference:
May be affected by signals from other electronic devices

2.Circuit Short - circuit Risk:
Improper use or moisture may cause short - circuits

3.Electromagnetic Compatibility:
May interfere with or be affected by the electromagnetism of other devices

Potential Consequences

- Equipment malfunction
- Damaged electronic components
- Interfere with the normal operation of other electronic devices

Safety Measures

1.Usage Environment

- Do not use near medical devices such as pacemakers.
- Avoid using near strong wireless signal sources (e.g., high - power routers, microwave ovens)

2.Device Maintenance

- Ensure the antennas of the toy car and remote control are intact and unobstructed.

3.Waterproof and Moisture - proof

- Do not immerse the toy car in water or expose it to rain or snow.

4.Prohibition of Disassembly

- Do not disassemble the remote control or the electronic module of the toy car by yourself.
- There are no user - repairable components inside; there is a risk of electric shock and damage.
- For repairs, contact the authorized service center.

8 Important Reminder: Age and Ability Appropriateness Requirements!

Usage Guidance

- The programming function requires certain logical thinking and reading abilities.
- It is recommended to learn and use it under the guidance of parents or teachers.

Supervisory Responsibilities

- Parents/guardians should assess the child's operational ability and maturity.
- Pay special attention to the safety of using the remote control and programming functions.

Recommended Age for This Product:

Above 6 Years Old

9 Material and Environmental Warnings

Temperature Environment Control

- Do not expose the toy to high - temperature environments (such as inside a car under direct sunlight, near heating equipment) for a long time. High temperatures may cause plastic deformation and battery overheating.
- Avoid using the toy in extremely low - temperature environments (below -20℃). Low temperatures will reduce battery performance and increase the brittleness of plastic parts

Chemical Substance Contact Protection

- Strictly avoid contact with corrosive chemicals such as strong acids and alkalis (e.g., sulfuric acid, sodium hydroxide).
- Do not contact organic solvents (e.g., gasoline, alcohol, paint thinners) and strong cleaning agents, to prevent damage to the oxide layer on the metal surface or plastic parts.
- Keep away from salt-containing environments (e.g., seaside) or humid environments to prevent corrosion of aluminum alloy parts.

Cleaning and Maintenance Specifications

- When cleaning, use a slightly damp soft cloth to wipe the surface. Do not soak or use a high - pressure water gun for washing.
- Do not use cleaning agents containing abrasives, alcohol, or strong alkalis (e.g., bleach).

Safety of Aluminum Alloy Parts

- Before assembly, check if there are burrs on the edges of the parts.
- Handle aluminum alloy parts carefully to prevent scratches.

The plastics (complying with ASTM F963, EN71, GB 6675 standards) and aluminum alloy materials used in this product have passed safety certifications.
If the user is known to be allergic to metals (such as nickel) or plastic additives, it is recommended to use with caution and consult professional advice.

10 Icon Meanings

General Warning | Battery Risk | Water/Moisture Risk | Do Not Disassemble | Corrosion

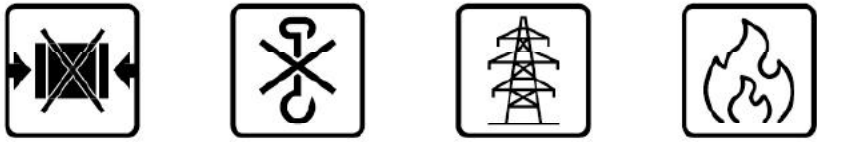

Moving Parts /Crush Hazard | Assembly /Small Parts Hazard | High-Voltage Flash | High Temperature

- **This product complies with ASTM F963 (USA), EN71 (EU) and ISO 8124 toy safety standards.**
- **This warning complies with the EU REACH Regulation, US CPSC safety standards and China GB 6675 toy safety requirements.**

KIDROCK 百变小珂 Accessories List

Profile accessories

1 Profile 20mm*6
2 Profile 30mm*1
3 Profile 40mm*3
4 Profile 60mm*4

5 Profile 80mm*8
6 Profile 120mm*2
7 Profile 160mm*3
8 Profile 240mm*2
9 Profile 280mm*2

Peripheral accessories

28 M6-Spacer *8
29 M8-Spacer *8
30 SS Spacer *3
31 SS Washer M6x12 *3
32 SS Washer M8x16 *8
33 M4-Sliding slot *14
34 M6-Sliding slot *48

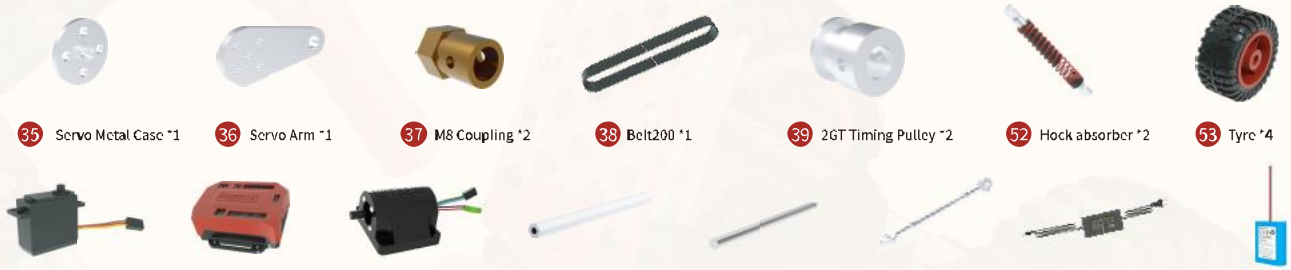

35 Servo Metal Case *1
36 Servo Arm *1
37 M8 Coupling *2
38 Belt200 *1
39 2GT Timing Pulley *2
52 Hock absorber *2
53 Tyre *4
54 Servo *1
55 Controller *1
56 External Motor *1
57 Hex-bearing130 *1
58 R-W Long Axle *1
61 Steering Tie Rod *2
72 Charger *1
73 Battery pack *1

Plastic accessories

10 Flat Adapter joint *10
11 5°corner panel*12
12 10°corner panel*10
13 2-card base*42

14 4-card base*50
15 Triangle-joint*32
16 Angle-joint*30
17 U joint*10

18 M6 R-H joint *6
19 Joint*4
20 Docking joint*4
21 M8-bearing joint (bearings)*4

22 Hex-joint *2
23 Kart Servo Bracket *1
24 Beach Buggy Servo Bracket *1
70 Cable clip *15

25 Board *2
26 Handle *2
27 M8-Red Spacer *24

Screw accessories

40 Hex-screw M3x8 *5
41 Hex-screw M3x20 *4
42 Hex-screw M4x8 *14
43 Hex-screw M6x8 *4

44 Hex screw M6x12 *42
45 Hex screw M6x18 *61
46 Hex screw M6x30 *10
47 Hex screw M6x40 *3

48 M3-Lock nut *4
49 M4-Lock nut *4
50 M6-Lock nut *40
51 M6 Thin Nut *6

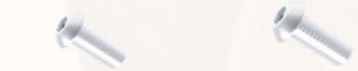

59 Hex-screw M3x14 *4
60 Hex-screw M6x16 *4

Programming accessories

62 LED light *2
63 Button *2

64 Buzzer *1
65 Variable potentiometer *1

66 USB data cable *1
67 Extension cord *1

68 3P connecting wire *6
69 8P connecting wire *1

71 Main control board *1
74 Remote control handle *1

PART 1

Required profiles:

3 Profile 40mm

7 Profile 160mm

9 Profile 280mm

Required Materials and Components

12

10° corner panel

13

2-card base

14

4-card base

15

Triangle-joint

16

Angle-joint

17

U joint

19

Joint

20

Docking joint

21

M8-bearing joint

34

M6-Sliding slot

41

Hex-screwM3*20

44

Hex-screw M6*12

45

Hex-screwM6*18

48

M3-Lock nut

50

M6-Lock nut

KIDROCK 百变小珂

a

Hex-screw M6*18

45 Hex-screw M6*18 x 2
16 Angle-joint
14 4-card base
3 Profile 40mm
12 10° corner panel
19 Joint

b

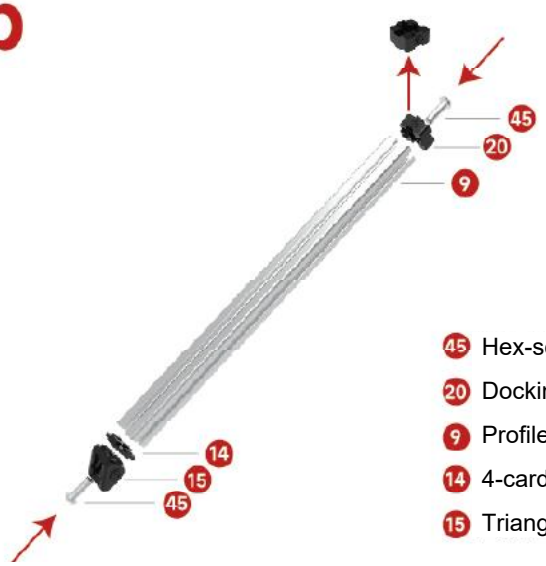

Hex-screw M6*18

45 Hex-screw M6*18 x 2
20 Docking joint
9 Profile 280mm
14 4-card base
15 Triangle-joint

c

Hex-screw M6*18

45 Hex-screw M6*18 x 2
21 M8-bearing joint(bearings)
14 4-card base
7 Profile1 60mm
20 Docking joint

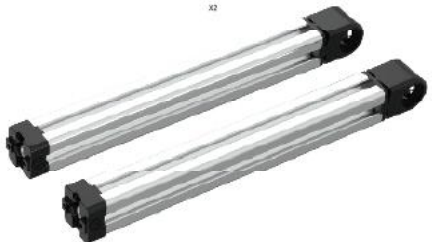

d (b+c)

Hex-screw M3*20

Symmetric Installation

41 Hex-screw M3*20 x 2

48 M3-Lock nut x 2

e (b+d)

Hex-screw M6*18

Symmetric Installation

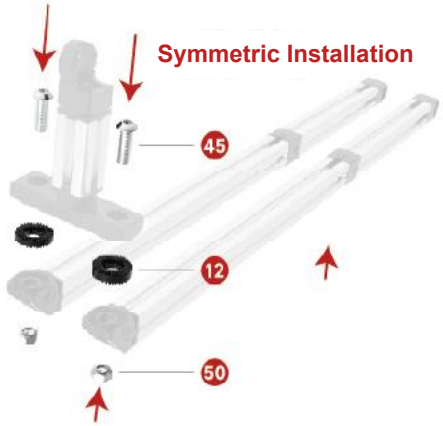

45 Hex-screw M6*18 x 2

12 10° corner panel x 2

50 M6-Lock nut x 2

f

Symmetric Installation

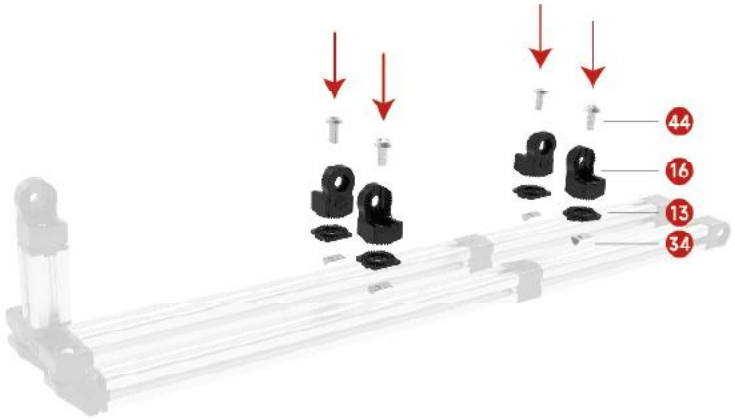

44 Hex-screw M6*12 x 4

16 Angle-joint x 4

13 2-card base x 4

34 M6-Sliding slot x 4

Hex-screw M6*12

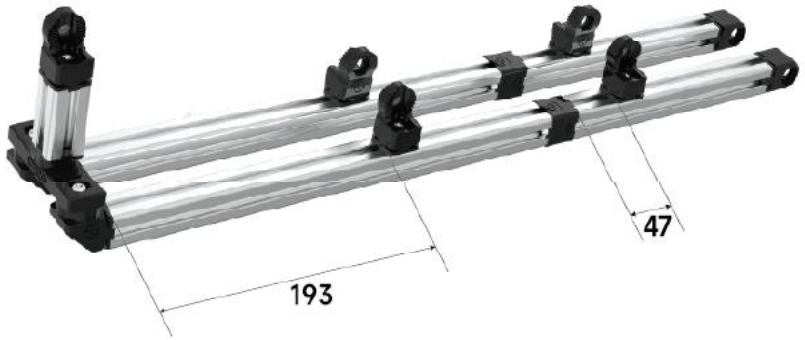

g

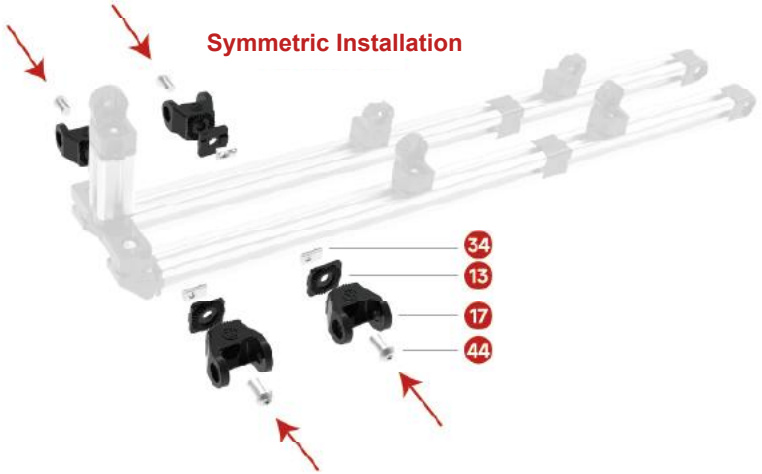

- 44 Hex-screw M6*12 x 4
- 13 2-card base x 4
- 17 U joint x 4
- 34 M6-Sliding slot x 4

Hex-screw M6*12

h

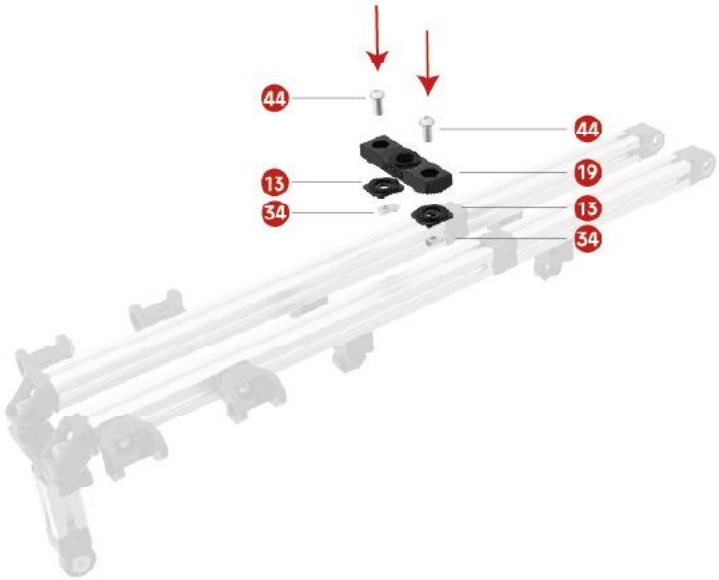

- 44 Hex-screw M6*12 x 2
- 13 2-card base x 2
- 19 Joint x 2
- 34 M6-Sliding slot x 2

Hex-screw M6*12

PART 2

Required profiles:

1. Profile 20mm
4. Profile 60mm
7. Profile 160mm

10 Flat Adapter joint

11 5° corner panel

12 10° corner panel

13 2-card base

14 4-card base

15 Triangle-joint

16 Angle-joint

17 U joint

21 M8-bearing joint

22 Hex-joint

26 Handle

27 M8-Red Spacer

29 M8-Spacer

31 SS Washer M6*12

32 SS Washer M8*16

34 M6-Sliding slot

42 Hex-screw M4*8

44 Hex-screw M6*12

45 Hex-screwM6*18

50 M6-Lock nut

57 Hex-bearing 130

a

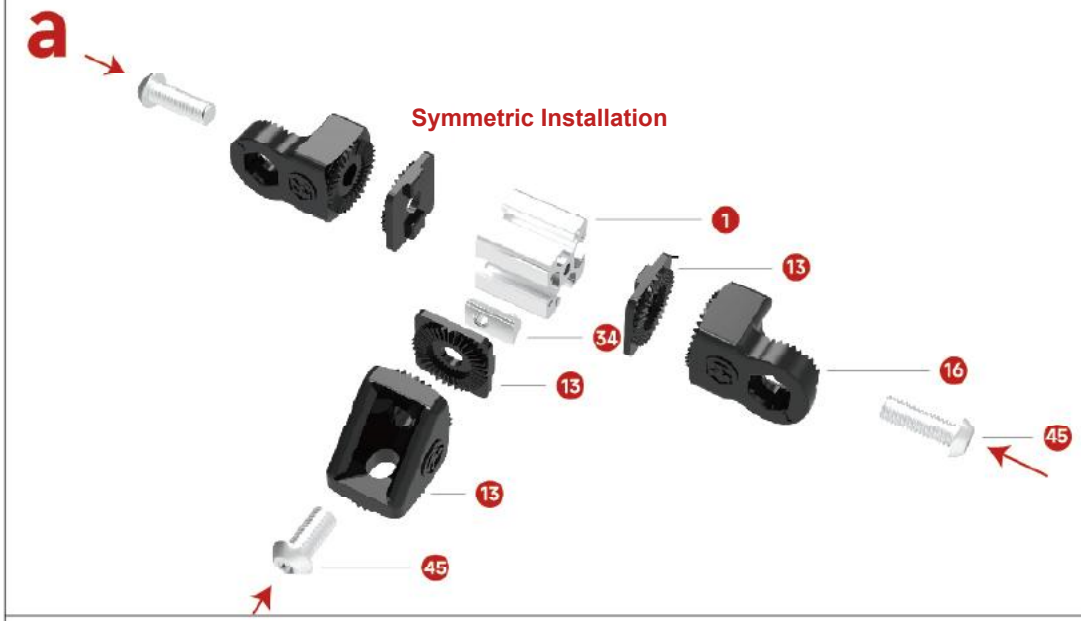

Hex-screw M6*18

1 Profile 20mm
13 2-card base x 2
16 Angle-joint x 2
34 M6-Sliding slot
45 Hex-screw M6*18 x 3

b

Hex-screw M6*18

10 Flat Adapter joint
16 Angle-joint
45 Hex-screw M6*18
50 M6-Lock nut

c (a+b)

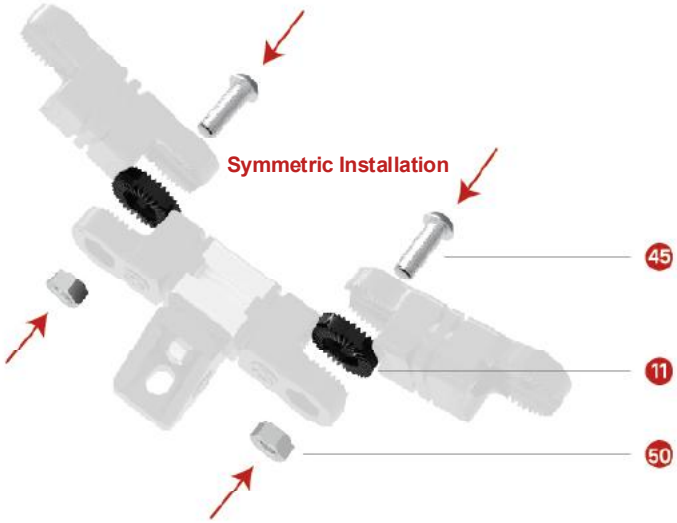

Hex-screw M6*18

- 11 5° corner panel x 2
- 45 Hex-screw M6*18 x 2
- 50 M6-Lock nut x 2

d

Hex-screw M6*18

- 10 Flat Adapter joint
- 16 Angle-joint
- 26 Handle
- 45 Hex-screw M6*18
- 50 M6-Lock nut

e(c+d)

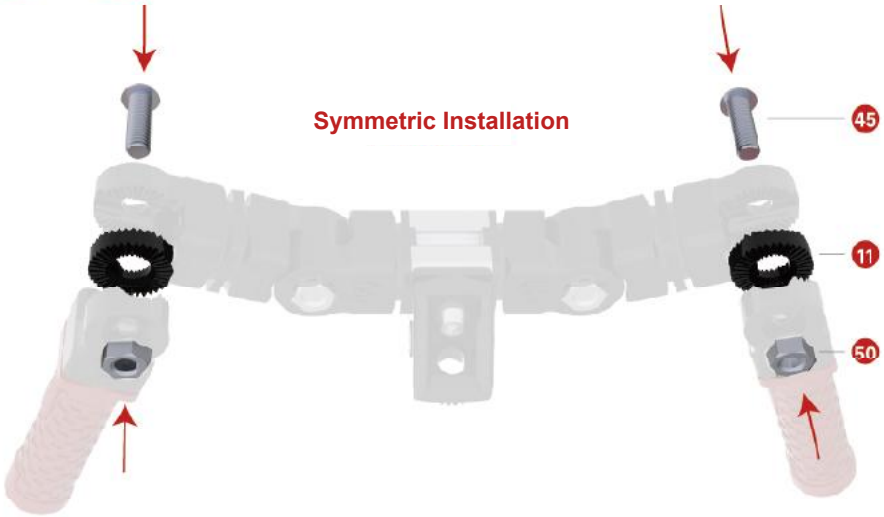

Hex-screw M6*18

45 Hex-screw M6*18 x 2

11 5° corner panel x 2

50 M6-Lock nut x 2

f

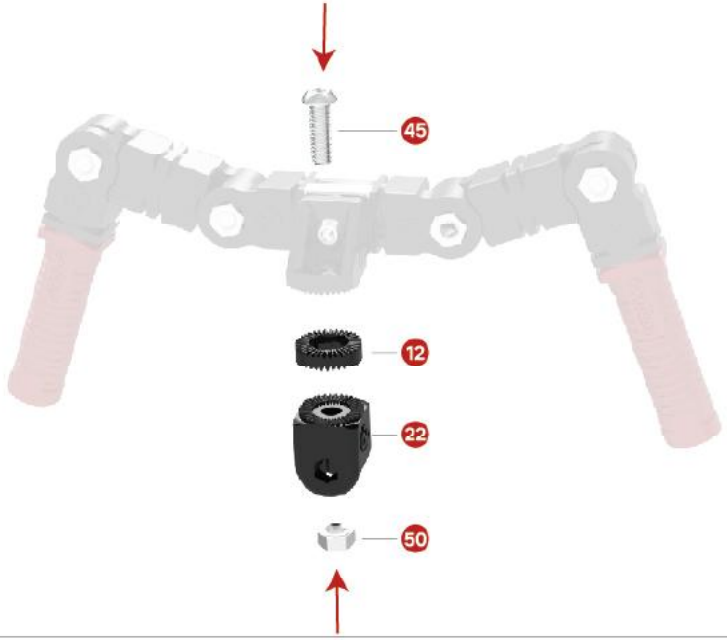

Hex-screw M6*18

45 Hex-screw M6*18

12 10° corner panel

22 Hex-joint

50 M6-Lock nut

g

45 Hex-screw M6*18 x 2
7 Profile160mm
14 4-card base x 2
16 Angle-joint

Hex-screw M6*18

h

34 M6-Sliding slot x 2
13 2-card base x 2
21 M8-bearing joint (bearings) x 2
44 Hex-screw M6*12 x 2

Hex-screw M6*12

i

- 50 M6-Lock nut
- 22 Hex-joint
- 12 10° corner panel
- 15 Triangle-joint
- 45 Hex-screw M6*18

Hex-screw M6*18

j(f+h+i)

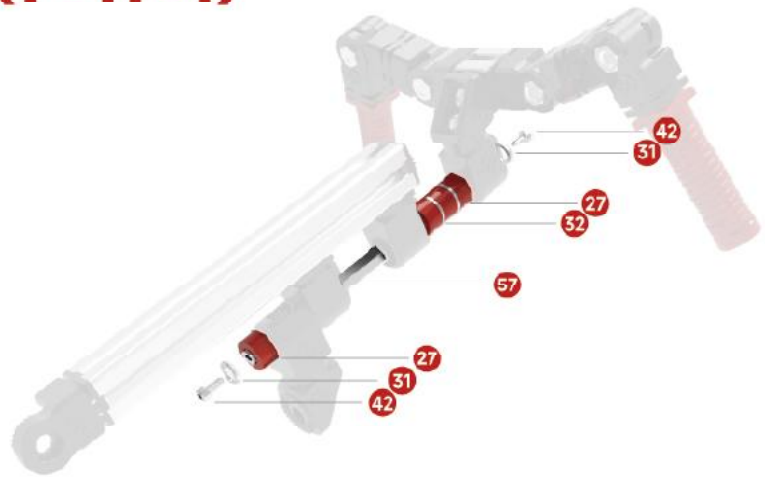

- 42 Hex-screw M4*8 x 2
- 31 SS Washer M6*12 x 2
- 27 M8-Red Spacer x 4
- 57 Hex-bearing 130
- 32 SS Washer M8*16 x 2

Hex-screw M4*8

k

Hex-screw M6*18

- 45 Hex-screw M6*18
- 15 Triangle-joint
- 10 Flat Adapter joint
- 16 Angle-joint
- 50 M6-Lock nut

l

- 45 Hex-screw M6*18
- 16 Angle-joint x 2
- 4 Profile 60mm
- 14 4-card base x 2

Hex-screw M6*18

X2

m(k+l)

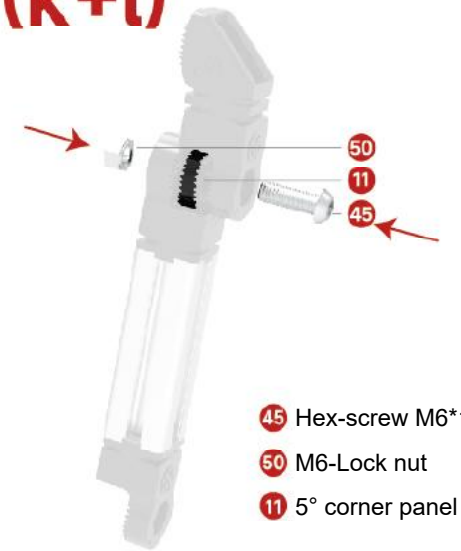

Hex-screw M6*18

- 45 Hex-screw M6*18
- 50 M6-Lock nut
- 11 5° corner panel

n(j+m)

- 44 Hex-screw M6*12 x 2
- 13 2-card base x 2
- 34 M6-Sliding slot x 2

Hex-screw M6*12

Symmetric Installation

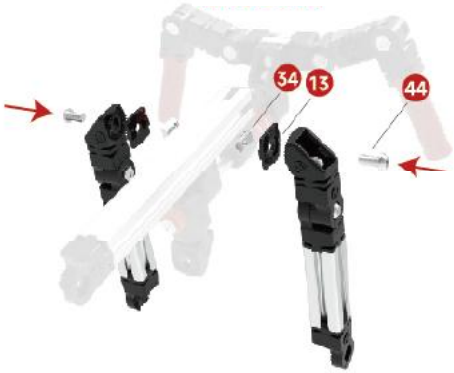

O

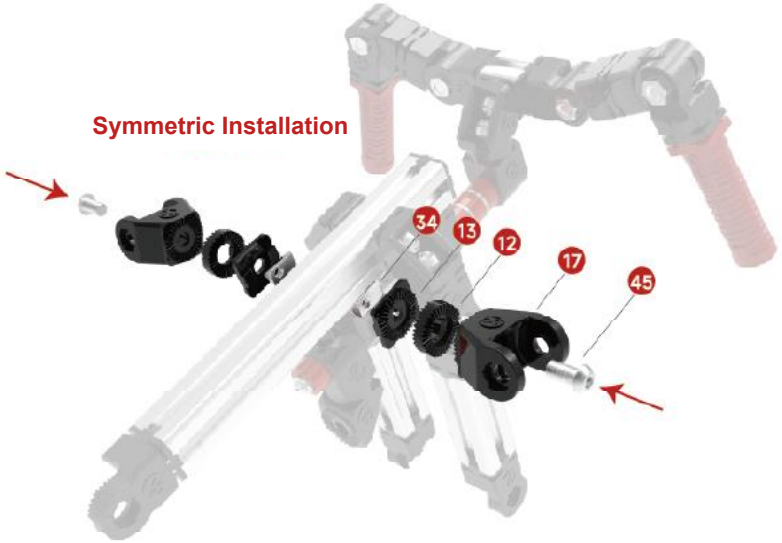
Symmetric Installation

- 34 M6-Sliding slot x 2
- 13 2-card base x 2
- 12 10° corner panel x 2
- 17 U joint x 2
- 45 Hex-screw M6*18 x 2

A+B Installation

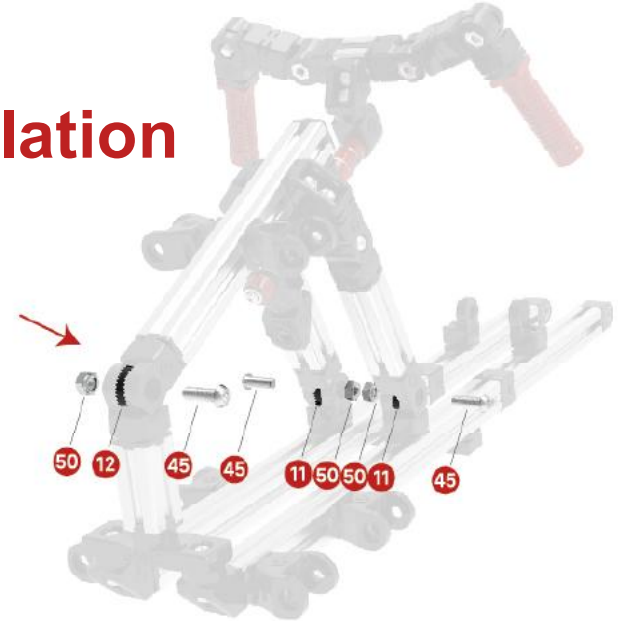

- 50 M6-Lock nut x 3
- 12 10° corner panel
- 45 Hex-screw M6*18 x 3
- 11 5° corner panel x 2

PART 3

Required profiles:

1. Profile 20mm
4. Profile 60mm
5. Profile 80mm

10
Flat Adapter joint

11
5° corner panel

12
10° corner panel

13
2-card base

14
4-card base

15
Triangle-joint

16
Angle-joint

17
U joint

18
M6 R-H joint

19
Joint (bearings)

27
M8-Red Spacer

28
M6-Spacer

30
SS Spacer

34
M6-Sliding slot

44
Hex-screw M6*12

45
Hex-screw M6*18

46
Hex-screw M6*30

47
Hex-screw M6*40

50
M6-Lock nut

52
Hockabsorber

53
Tyre(bearings)

KIDROCK 百变小珂

a

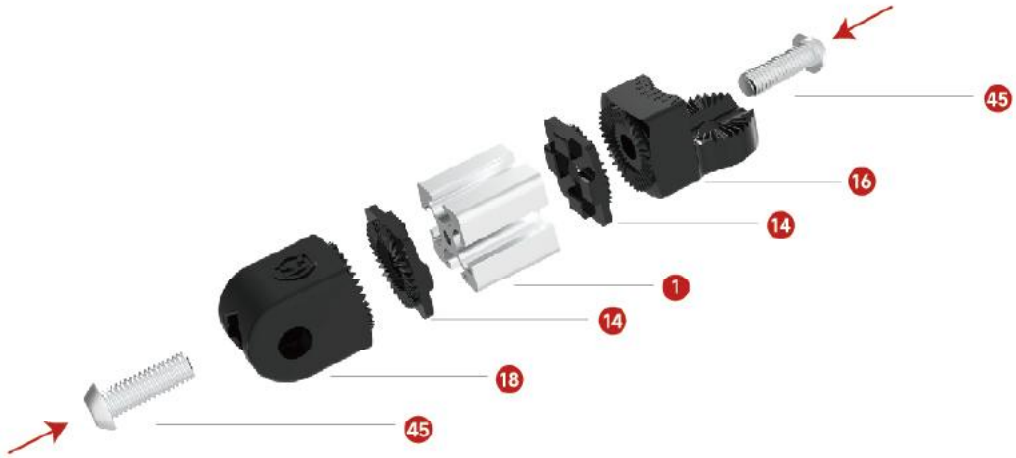

45 Hex-screw M6*18 x 2
1 Profile 20mm
14 4-card base x 2
16 Angle-joint
18 M6 R-H joint

Hex-screw M6*18

b

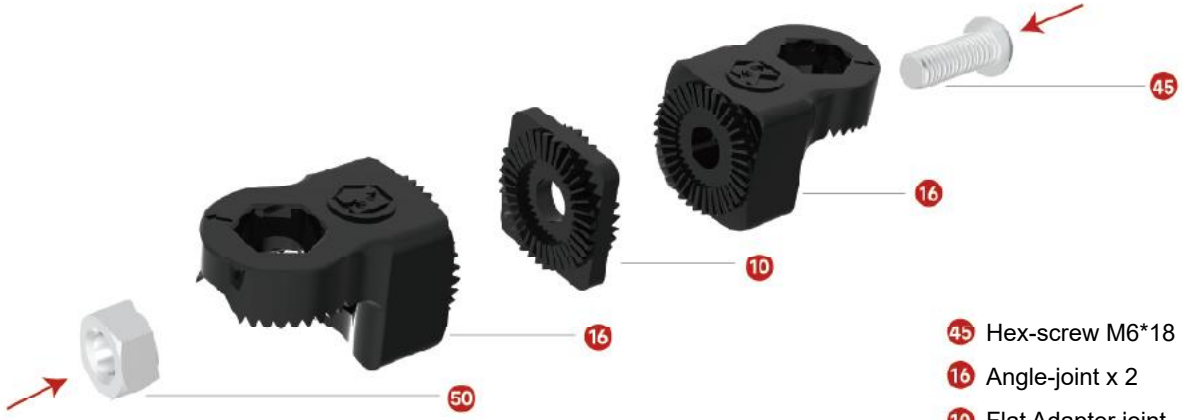

45 Hex-screw M6*18
16 Angle-joint x 2
10 Flat Adapter joint
50 M6-Lock nut

Hex-screw M6*18

c

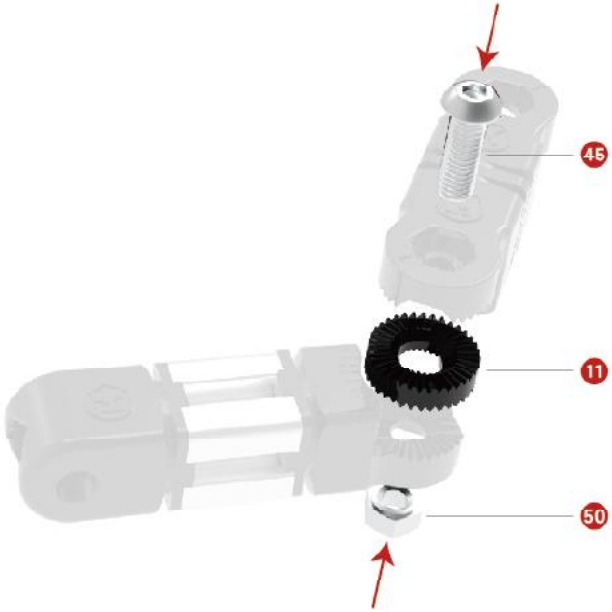

Hex-screw M6*18

45 Hex-screw M6*18
11 5° corner panel
50 M6-Lock nut

d

Hex-screw M6*18

45 Hex-screw M6*18 x 2
5 Profile 80mm
14 4-card base x 2
17 U joint
18 M6 R-H joint

e

44 Hex-screw M6*12 x 2
17 U joint
13 2-card base x 2
34 M6-Sliding slot x 2
16 Angle-joint

Hex-screw M6*12

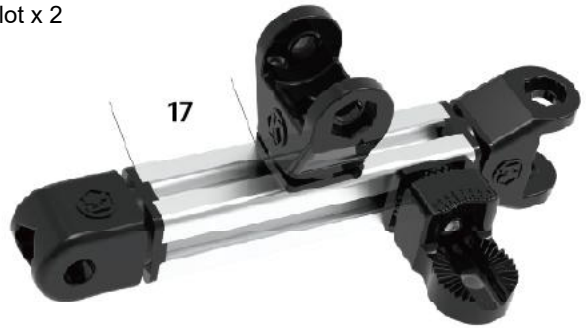

f

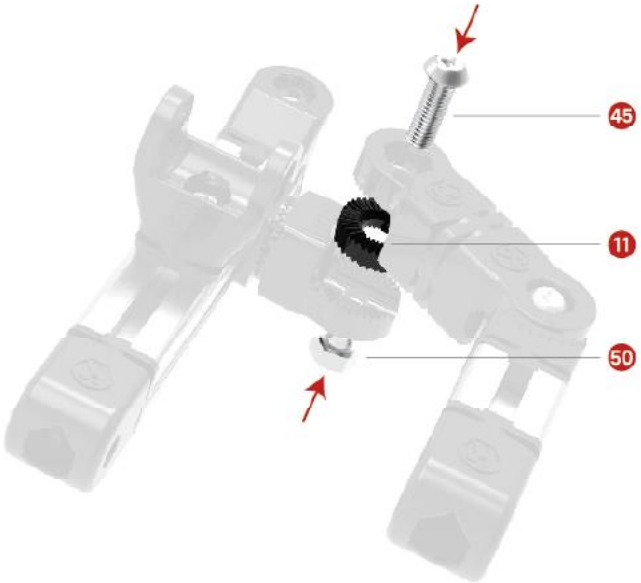

45 Hex-screw M6*18
11 5° corner panel
50 M6-Lock nut

Hex-screw M6*18

g

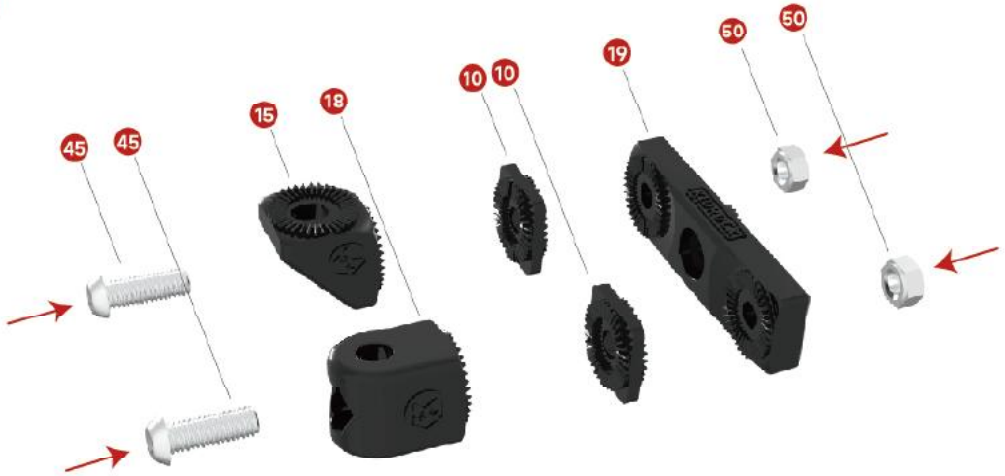

- 45 Hex-screw M6*18 x 2
- 15 Triangle-joint
- 10 Flat Adapter joint x 2
- 50 M6-Lock nut x 2
- 18 M6 R-H joint
- 19 Join t(bearings)

Hex-screw M6*18

h

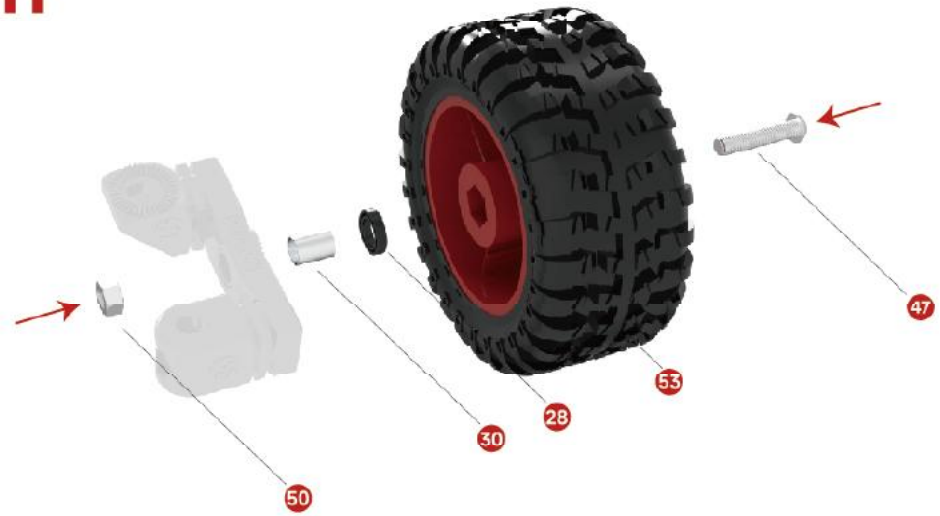

- 30 SS Spacer
- 50 M6-Lock nut
- 47 Hex-screw M6*40
- 53 Tyre (bearings)
- 28 M6-Spacer

Hex-screw M6*40

i(f+h)

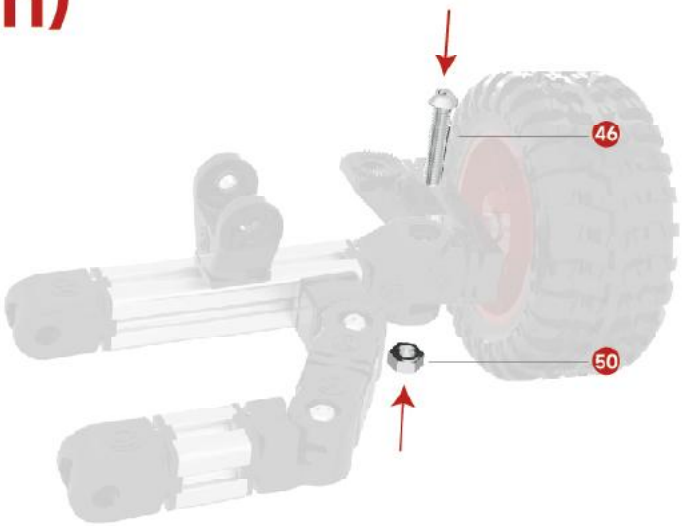

46 Hex-screw M6*30

50 M6-Lock nut

Hex-screw M6*30

j

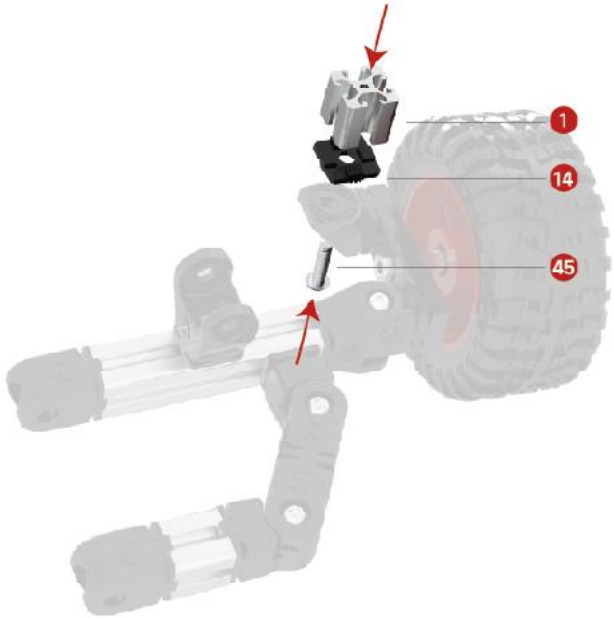

44 Hex-screw M6*12

1 Profile 20mm

14 4-card base

Hex-screw M6*12

k

Hex-screw M6*30

46 Hex-screw M6*30

52 Hock absorber

50 M6-Lock nut

27 M8-Red Spacer x 2

Installation

25

Board

32

SS Washer M8*16

37

M8 Coupling

39

2GT Timing Pulley

42

Hex-screw M4*8

43

Hex-screw M6*8

55

Controller

58

R-W Long Axle

60

Hex-screw M6*16

61

Steering Tie Rod

Hex-screw M6*30

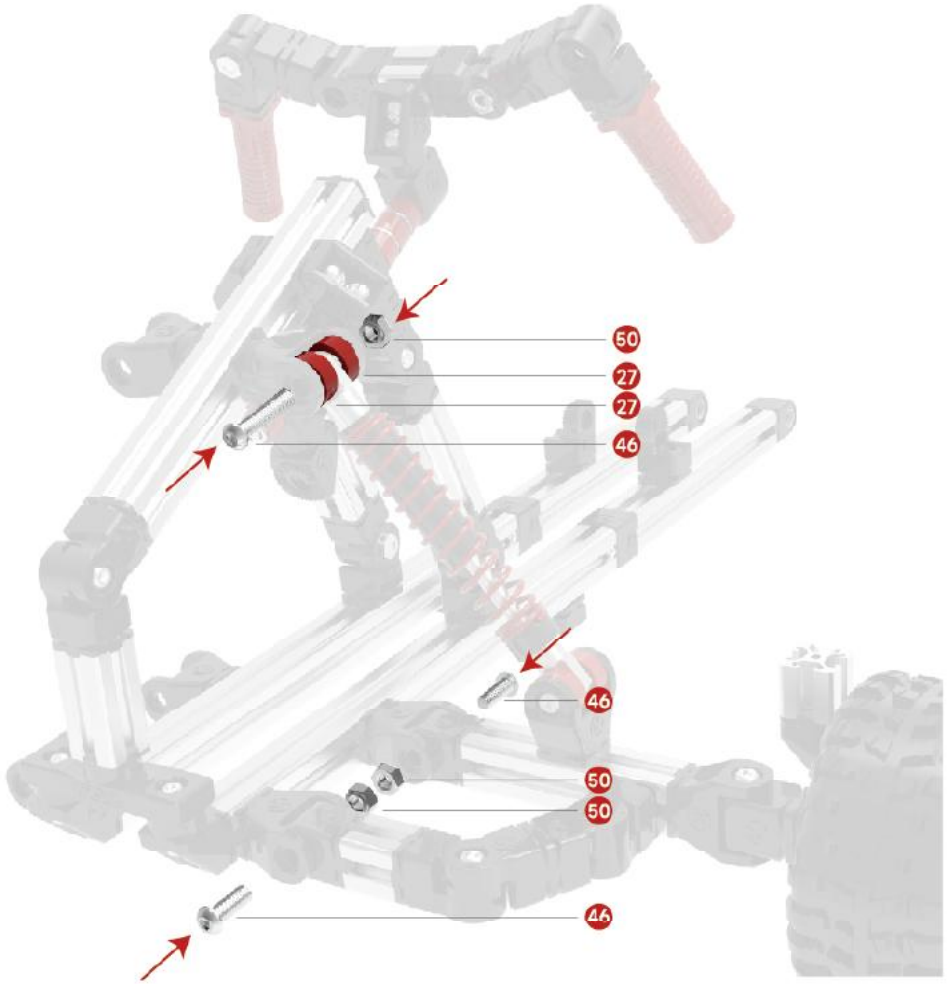

46 Hex-screw M6*30 x 3

50 M6-Lock nut x 3

27 M8-Red Spacer x 2

Symmetric Installation

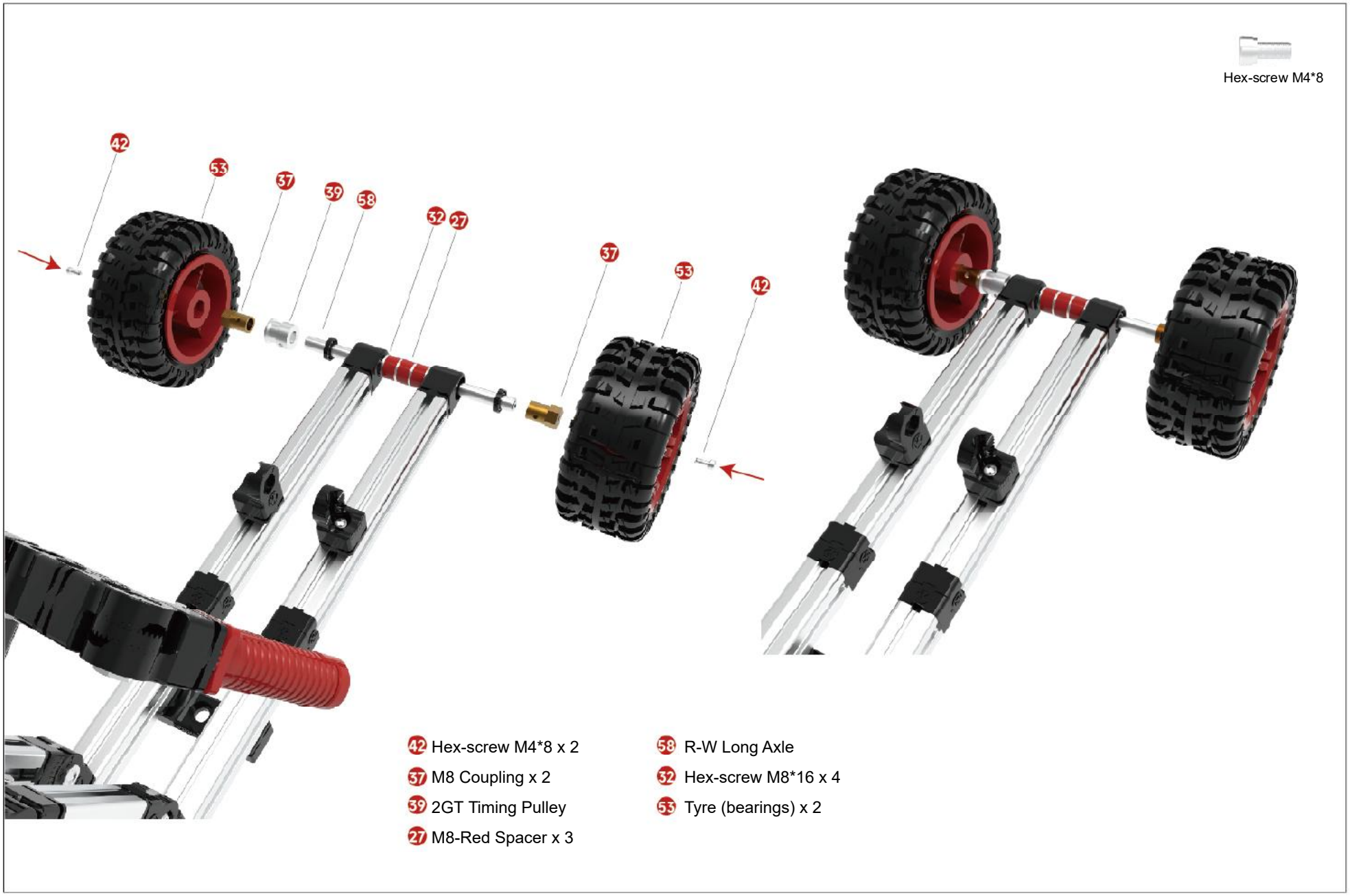
Hex-screw M4*8
42
53
37
39
58
32
27
37
53
42
42 Hex-screw M4*8 x 2
37 M8 Coupling x 2
39 2GT Timing Pulley
27 M8-Red Spacer x 3
58 R-W Long Axle
32 Hex-screw M8*16 x 4
53 Tyre (bearings) x 2

45 Hex-screw M6*18 x 2
1 Profile 20mm
14 4-card base x 2
15 Triangle-joint x 2

Hex-screw M6*18

Symmetric Installation

45 Hex-screw M6*18 x 4
14 4-card base x 4
4 Profile 60mm x 2
16 Angle-joint x 2

Hex-screw M6*18

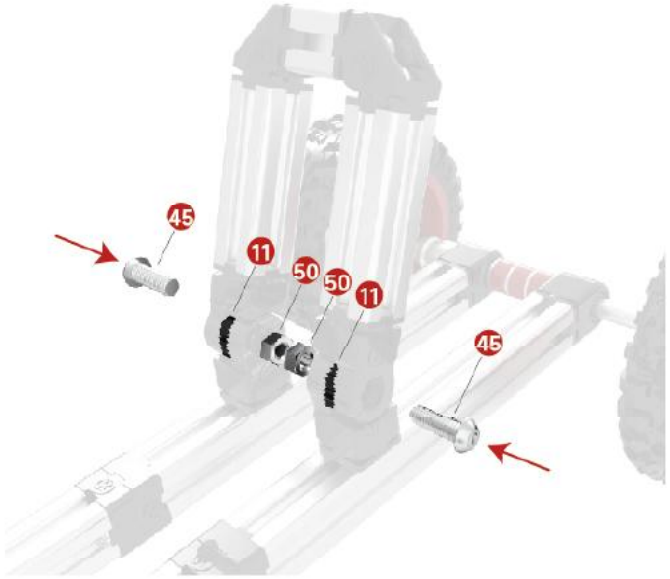

45 Hex-screw M6*18 x 2

50 M6-Lock nut

11 5° corner panel x 2

Hex-screw M6*18

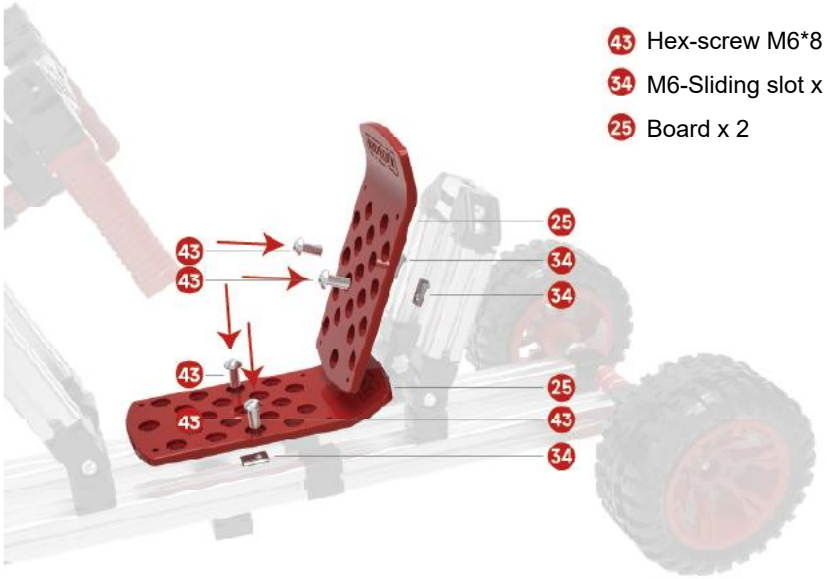

43 Hex-screw M6*8 x 4

34 M6-Sliding slot x 4

25 Board x 2

Hex-screw M6*8

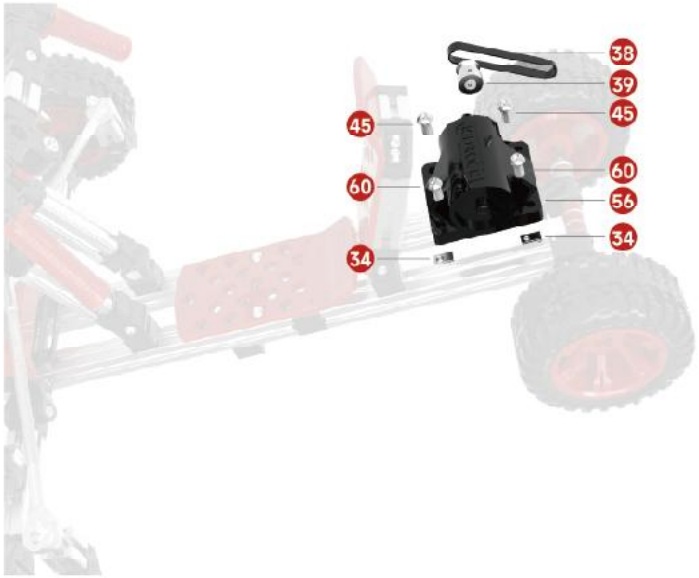

45 Hex-screw M6*18 x 4

34 M6-Sliding slot x 4

39 2GT Timing Pulley

38 Belt 200

56 External Motor

60 Hex-screw M6*16 x 4

Hex-screw M6*16Hex-screw M6*18

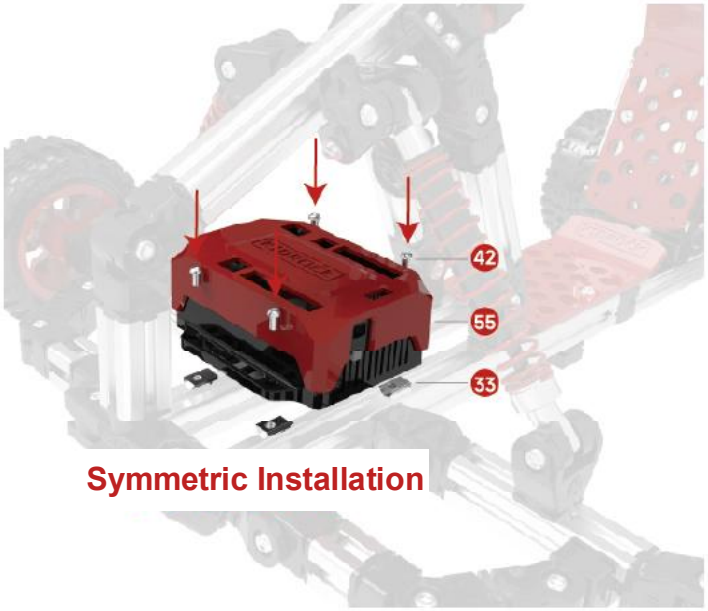

Symmetric Installation

42 Hex-screw M4*8 x 4

33 M4-Sliding slot x 4

55 Controller

Hex-screw M4*8

Symmetric Installation

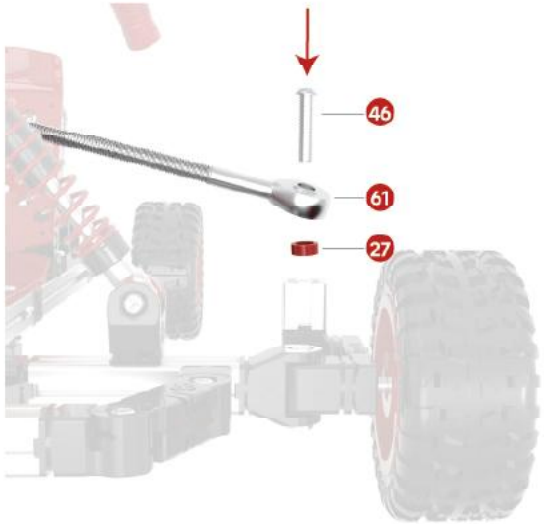

46 Hex-screw M6*30
27 M8-Red Spacer
61 Steering Tie Rod

Hex-screw M6*30

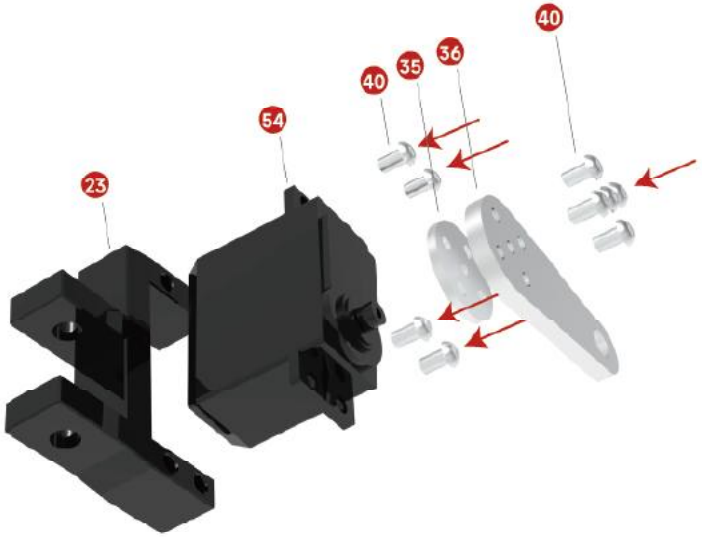

23 Kart Servo Bracket
54 Servo
40 Hex-screw M3*8 x 9
35 Servo Metal Case
36 Servo Arm

Hex-screw M3*8

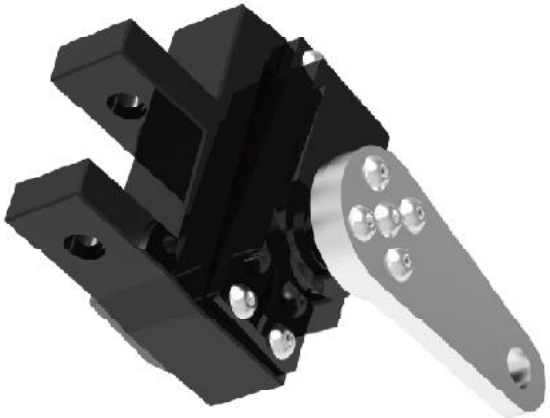

Mounting Method

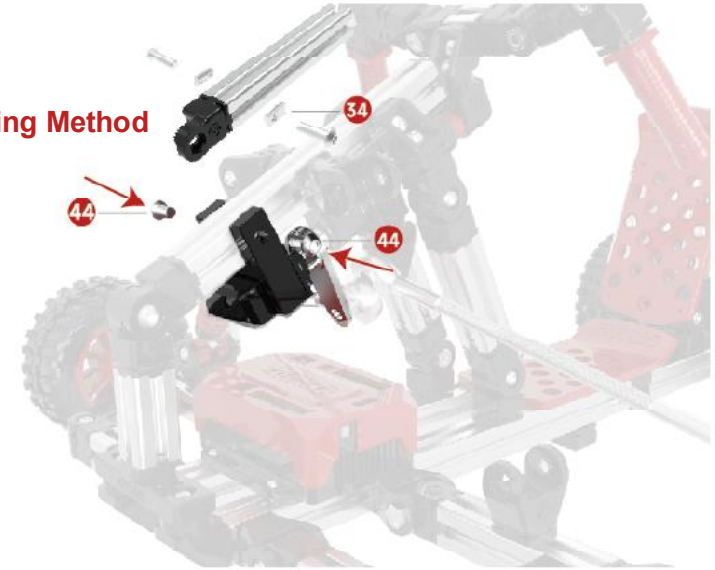

44 Hex-screw M6*12 x 2

34 M6-Sliding slot x 2

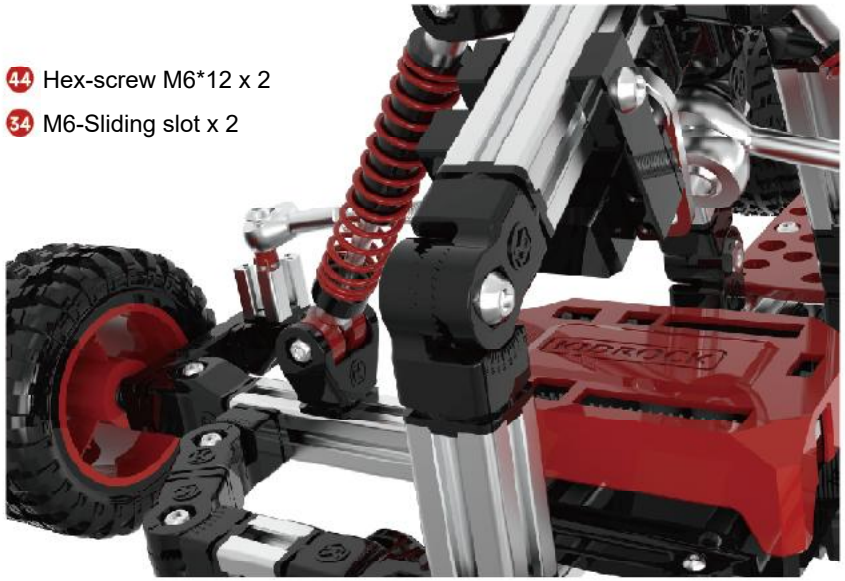

Hex-screw M6*12

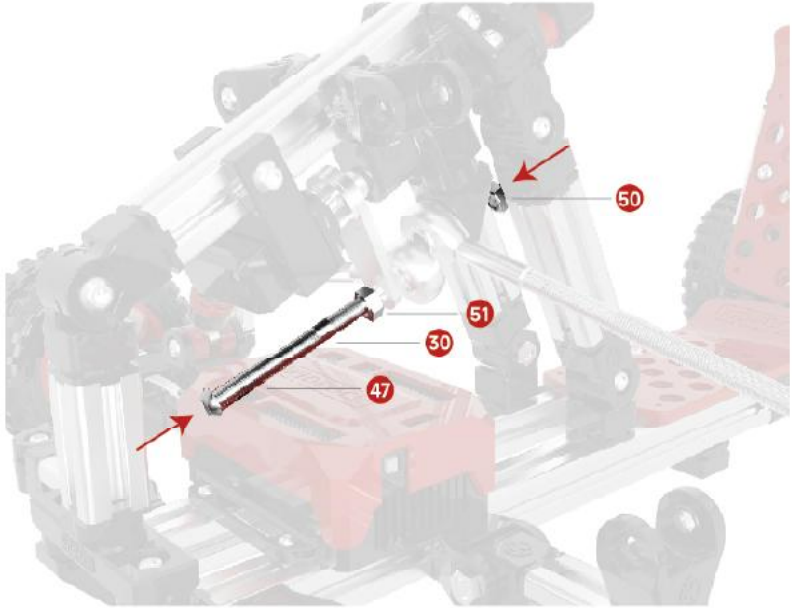

50 M6-Lock nut

51 M6 Thin Nut

30 SS Spacer

47 Hex-screw M6*40

Hex-screw M6*40

KIDROCK 百变小珂

FCC Warning

This device complies with part 15 of the FCC Rules. Operation is subject to the following two conditions: (1) This device may not cause harmful interference, and (2) this device must accept any interference received, including interference that may cause undesired operation.

Any Changes or modifications not expressly approved by the party responsible for compliance could void the user's authority to operate the equipment.

Note: This equipment has been tested and found to comply with the limits for a Class B digital device, pursuant to part 15 of the FCC Rules. These limits are designed to provide reasonable protection against harmful interference in a residential installation. This equipment generates uses and can radiate radio frequency energy and, if not installed and used in accordance with the instructions, may cause harmful interference to radio communications. However, there is no guarantee that interference will not occur in a particular installation. If this equipment does cause harmful interference to radio or television reception, which can be determined by turning the equipment off and on, the user is encouraged to try to correct the interference by one or more of the following measures:

-Reorient or relocate the receiving antenna.

-Increase the separation between the equipment and receiver.

-Connect the equipment into an outlet on a circuit different from that to which the receiver is connected.

-Consult the dealer or an experienced radio/TV technician for help.

The device has been evaluated to meet general RF exposure requirement. The device can be used in portable exposure condition without restriction.