东莞市一佳电子通讯科技有限公司

Dongguan YiJia Electronics Communication Technology Co.,Ltd.

规 格 承 认 书

SPECIFICATION FOR APPROVAL

日 期 Date	2024/01/08
编 号 File No	24010802
版 本 Revision	1.0

客 户 CUSTOMER: 瑞声科技

客户料号 CUSTOMER NO: AZ003

品 名 PART NAME: BT Antenna

供方料号 SUPPLIER NO: YJW05.041.002.302A

送样日期Date: 送样数量Q'TY:

客户确认CUSTOMER APPROVED BY		
APPROVAL	CHIEF	SUPERVISOR

供方确认 SUPPLIER SIGNATURE		
APPROVAL	CHECK	DESIGN
ChenGuoqiang	XieLi	ChenXingyi

YJ-RD-F04-A

add：东莞市长安镇沙头社区木鱼路59号元富工业区 Tel:0769-82586086 Fax:0769-82586086

承认书项目表

NO.	内 容（Contents）	页 数（Number of Page）	页 码（Page Code）
1	承认书封面（Spec Cover）	1	1
2	承认书项目表（Spec Item ）	1	2
3	工程成品图 （Drawing）	1	3
4	天线规格（Antenna Specification）	1	4
5	S参数测试 （S Parameter ）	1	5
6	无源测试 （Passive Test ）	2	6 ~ 7
7	方向图（Radiation Pattern ）	3	8 ~ 10
8	无源测试 （Active Test ）	1	11
9	天线匹配电路（Antenna Matching Circuit）	1	12
10	天线装配图（Antenna Profile）	3	13 ~ 15
11	材质证明（ Material Certificate ）	31	16 ~ 46
12	RoHS报告（ RoHS Test Report ）	**	**
13	N/A	N/A	N/A

add：东莞市长安镇沙头社区木鱼路59号元富工业区 Tel:0769-82586086 Fax:0769-82586086

RoHS Compatible

CUSTOMER	
PART NO	

REV.	DESCRIPTION	DATE
A	首次发行	2024-01-05
B		

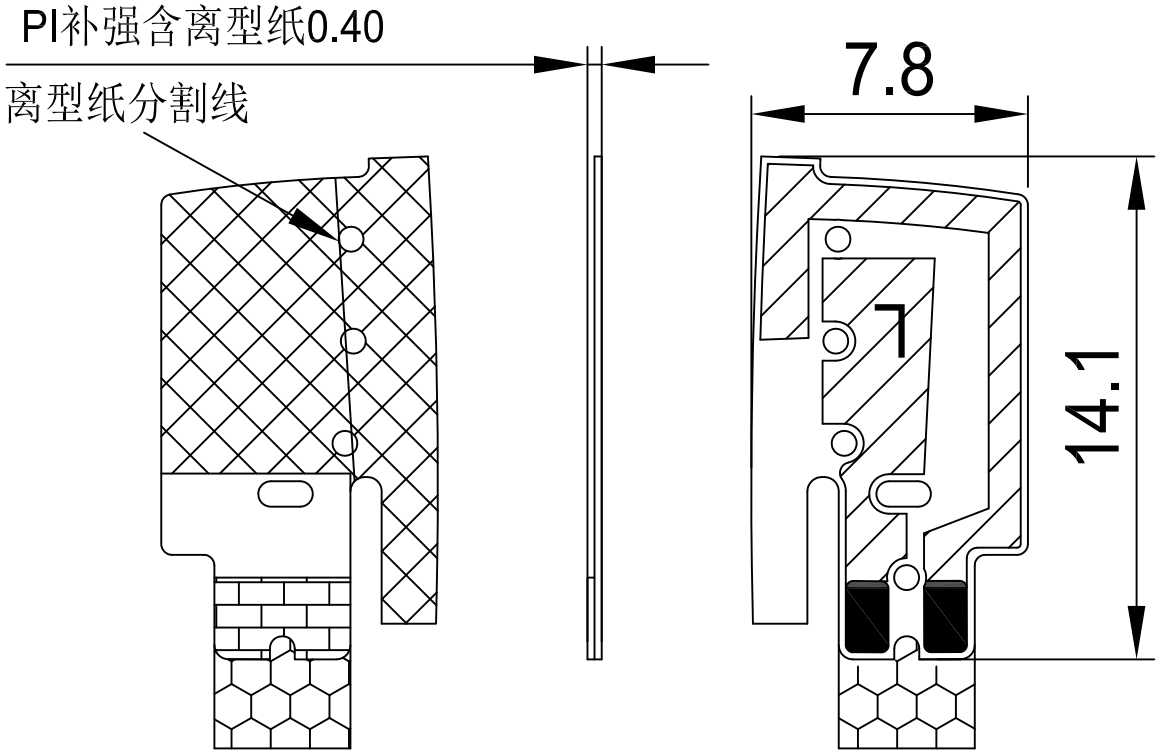

布線區　露铜区　易撕区　背胶区　PI补强区

备注:

1. 材质: 一对半PI基材，压延铜厚度0.5oz,
成品厚度不含离型纸: 0.1mm。
2. 颜色/表面处理:单面黑色油墨、白色丝印。
露铜区镀金处理,反面3M9471背胶、黄色无印字离型纸带分割线。
3. 包装: PET微粘膜包装。
4. 尺寸: 带＊为重点尺寸。
5. 公差: 未标注公差参照标准公差。

东莞市一佳电子通讯科技有限公司
Dongguan YiJia Electronics Communication Technology Co.,Ltd.
Tel :0769-82586086
Fax:0769-82586086

PART NAME: BT Antenna			
PART NO.: YJW05.041.002.302A			DATE: 2024-01-05
APPROVED BY	CHECKED BY	DESIGNED BY	
殷 涛	唐国浩	陈兴易	UNITS: mm SCALE: 1/1 REVISION: C

Tolerance
X.X ±0.50
X.XX±0.15
X° ±3°

天线规格
Antenna Specification

Electrical Properties	
Frequency	2.4-2.5GHz
Impedance	50 Ohm Nominal
V.S.W.R	2.5 Max
Gain	2.9 dBi
Radiation	Omni-directional
Polarization	Linear
Physical Properties	
Connector	None
Cable Type	None
Cable Length	None
Cable Color	None
Operating Temp.	-40 ~ +85 ˚C
Storage Temp / Humidity	25±5˚C / <70%

add：东莞市长安镇沙头社区木鱼路59号元富工业区 Tel:0769-82586086 Fax:0769-82586086

Agilent E5071B	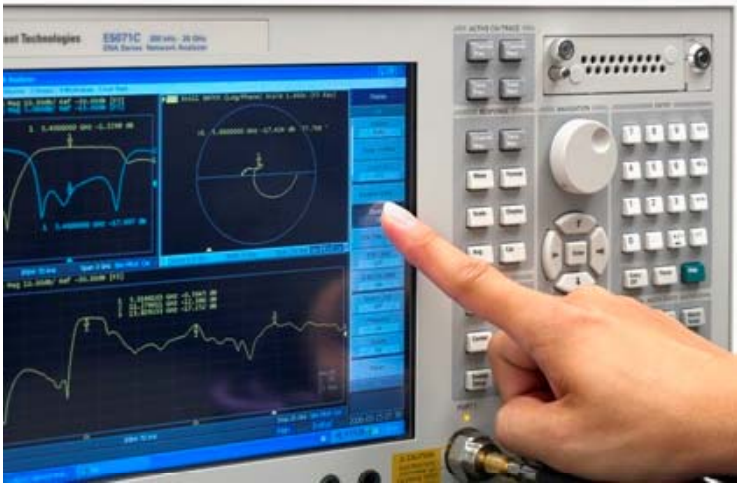
S Parameter Test // BT Antenna	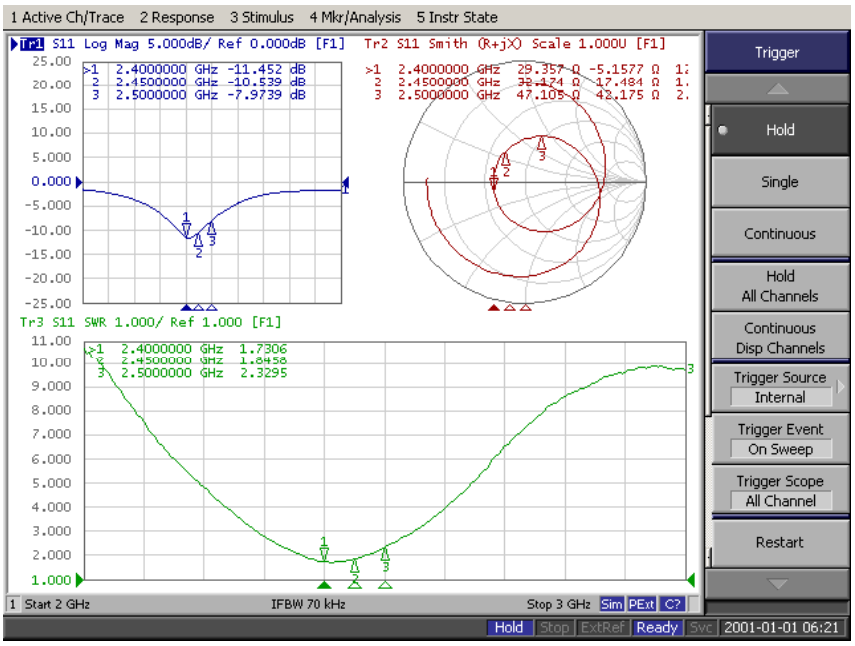

add：东莞市长安镇沙头社区木鱼路59号元富工业区 Tel:0769-82586086 Fax:0769-82586086

Antenna Passive Test

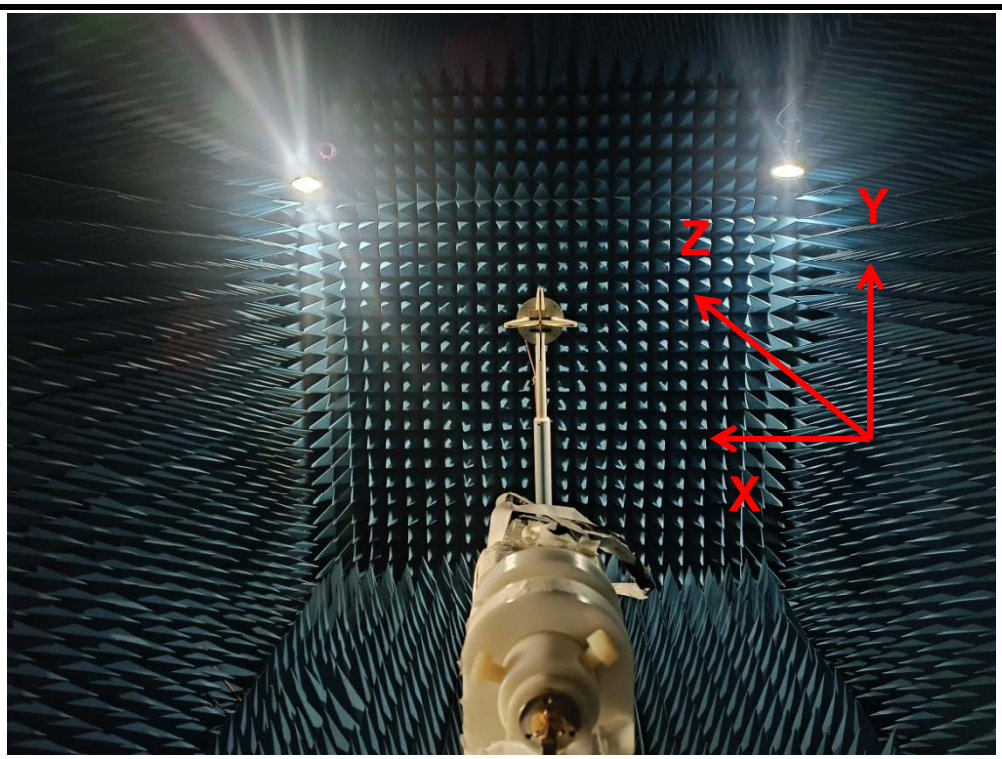

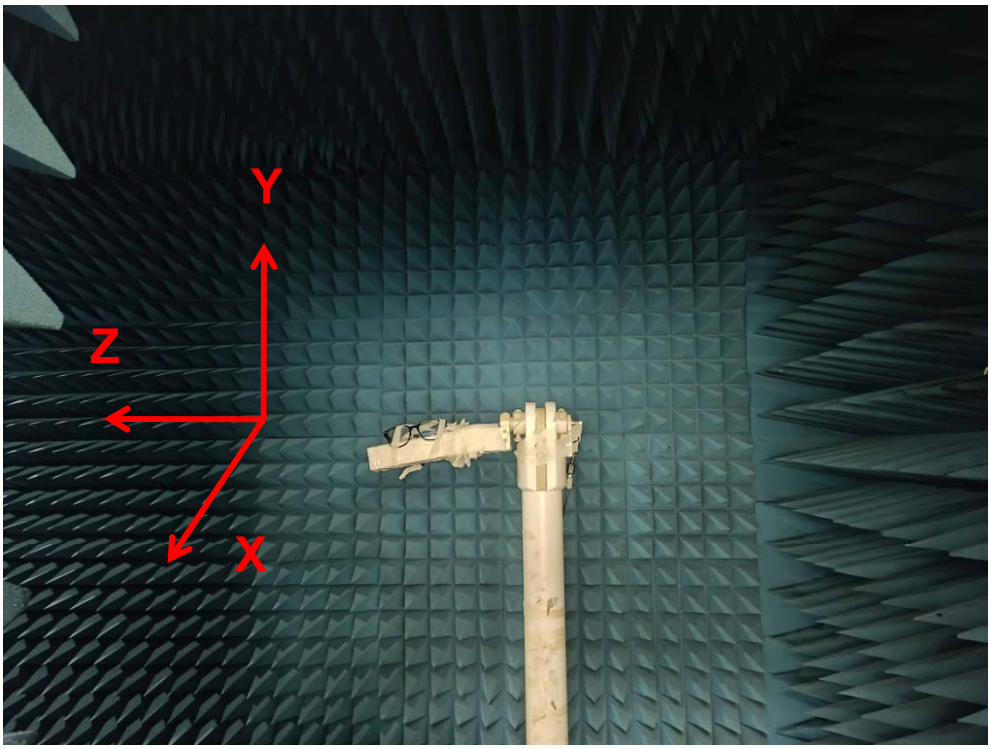

add：东莞市长安镇沙头社区木鱼路59号元富工业区 Tel:0769-82586086 Fax:0769-82586086

Passive Test For BT Antenna			
Freq (MHz)	Effi (%)	Effi (dB)	Gain (dBi)
2400	38.9	-4.1	2.2
2410	38.2	-4.2	2.2
2420	38.5	-4.1	2.3
2430	38.5	-4.1	2.3
2440	39.1	-4.1	2.5
2450	41.1	-3.9	2.8
2460	40.7	-3.9	2.9
2470	41.4	-3.8	2.9
2480	41.1	-3.9	2.8
2490	40.5	-3.9	2.7
2500	40.7	-3.9	2.8

add：东莞市长安镇沙头社区木鱼路59号元富工业区 Tel:0769-82586086 Fax:0769-82586086

Radiation Pattern For BT Antenna

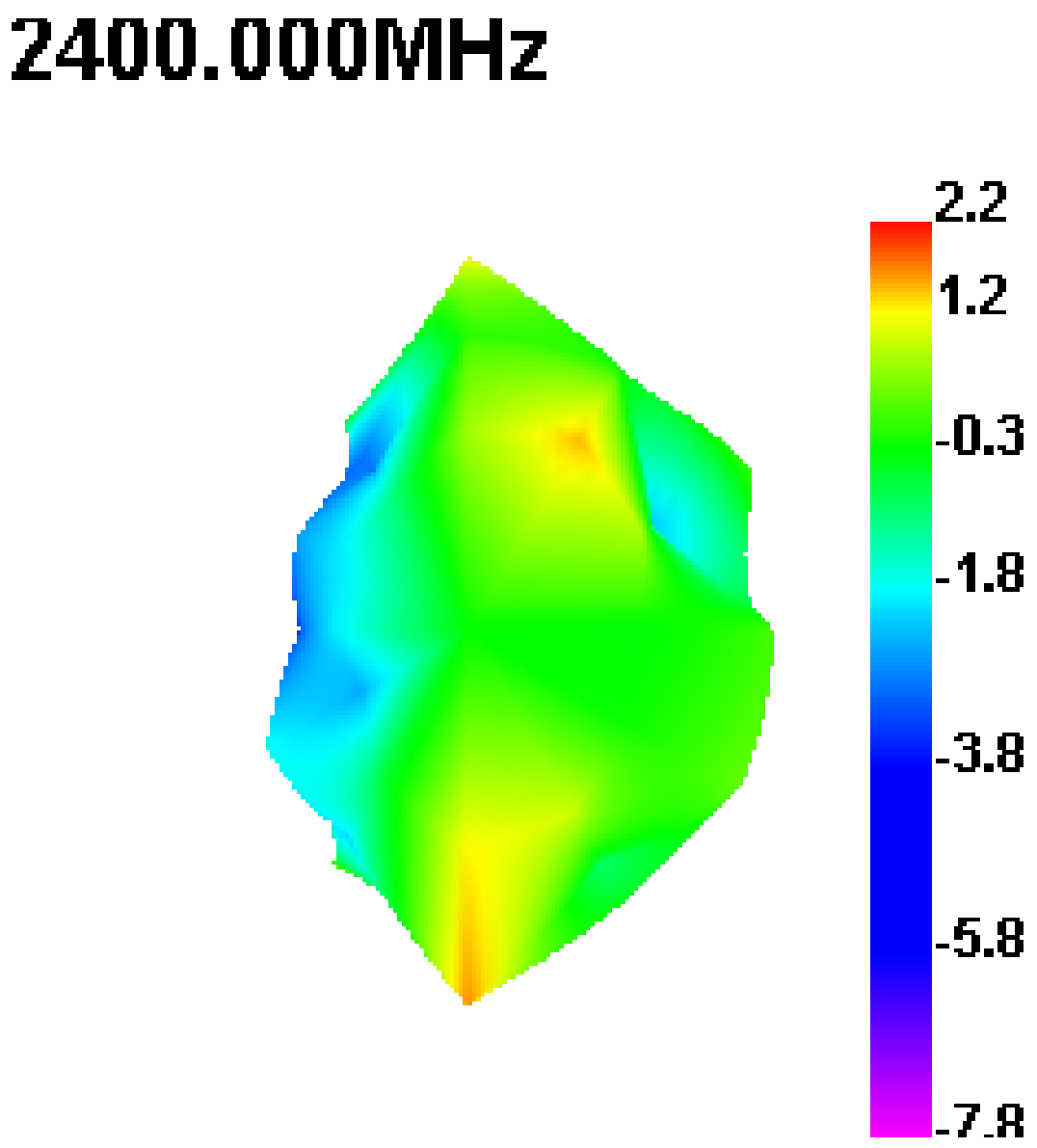

add：东莞市长安镇沙头社区木鱼路59号元富工业区 Tel:0769-82586086 Fax:0769-82586086

Radiation Pattern For BT Antenna

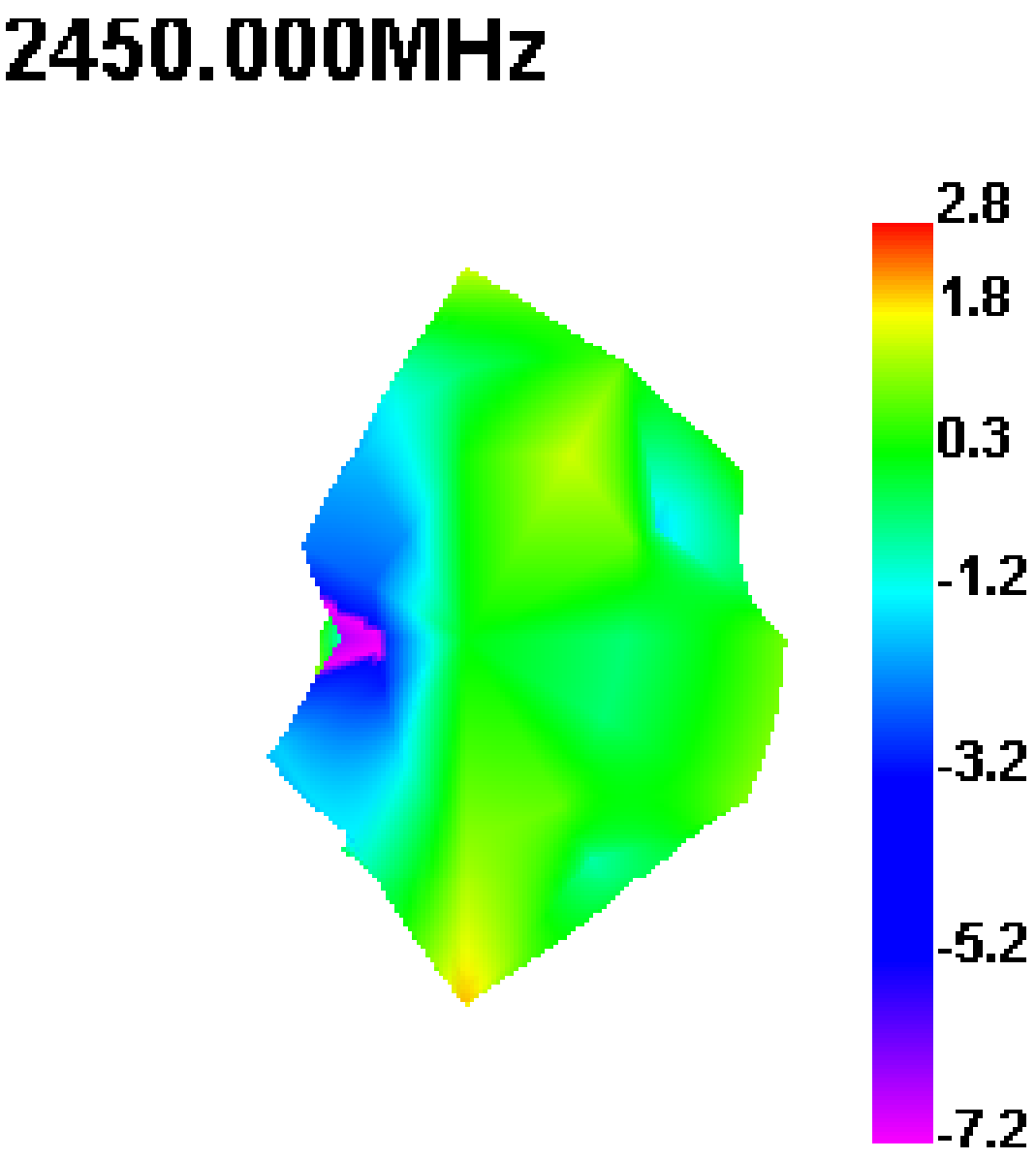

add：东莞市长安镇沙头社区木鱼路59号元富工业区 Tel:0769-82586086 Fax:0769-82586086

Radiation Pattern For BT Antenna

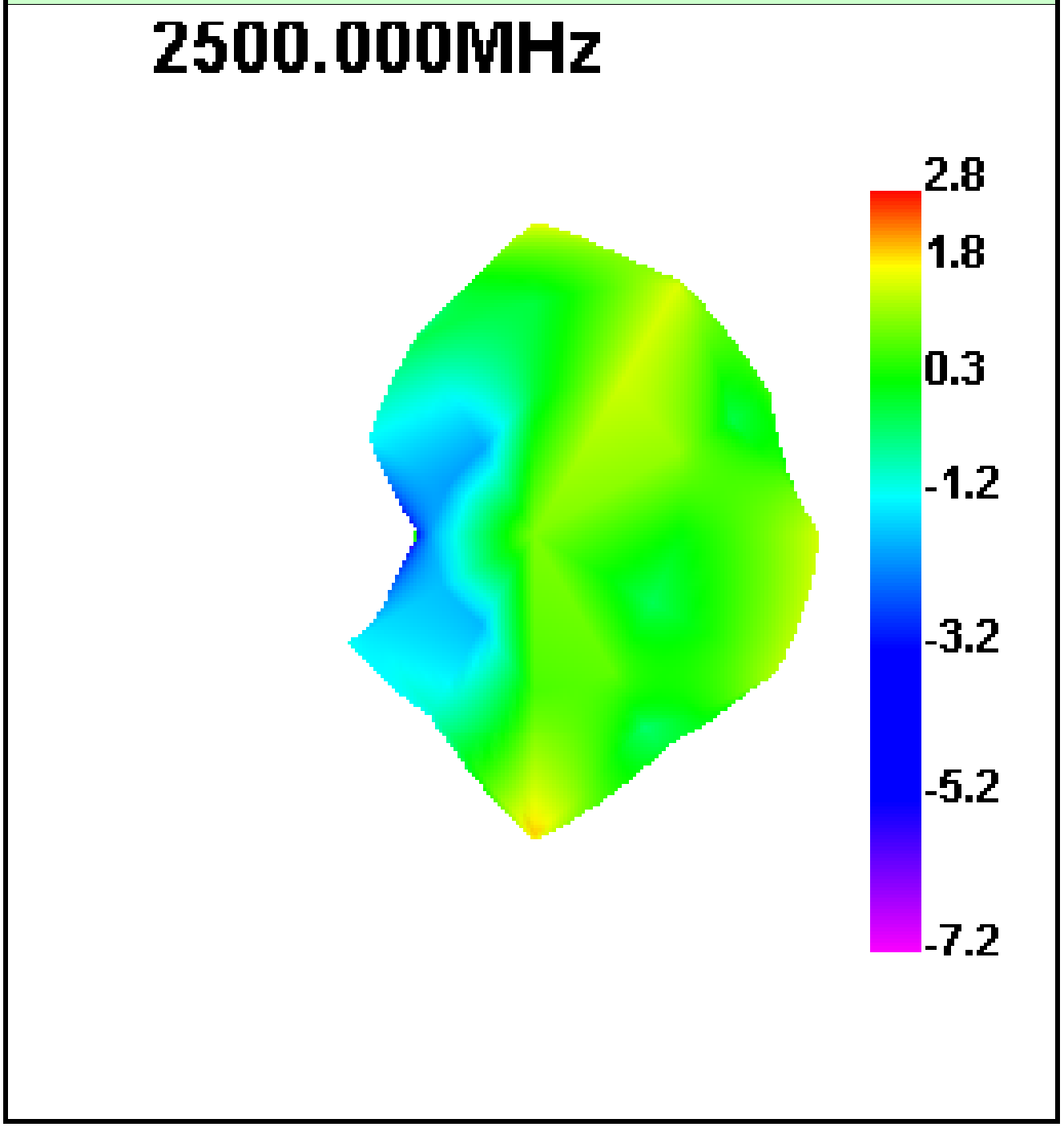

add：东莞市长安镇沙头社区木鱼路59号元富工业区 Tel:0769-82586086 Fax:0769-82586086

Active Test For BT Antenna					
Band	**Channel**	**TRP**	**EIRP**	**TIS**	**EIS**
Blue Tooth Band 0	0	8.5	13.0	-90.5	-96.1
	39	8.5	13.1	-91.8	-96.5
	78	8.6	13.4	-91.9	-96.7

add：东莞市长安镇沙头社区木鱼路59号元富工业区 Tel:0769-82586086 Fax:0769-82586086

BT Antenna Matching Circuit

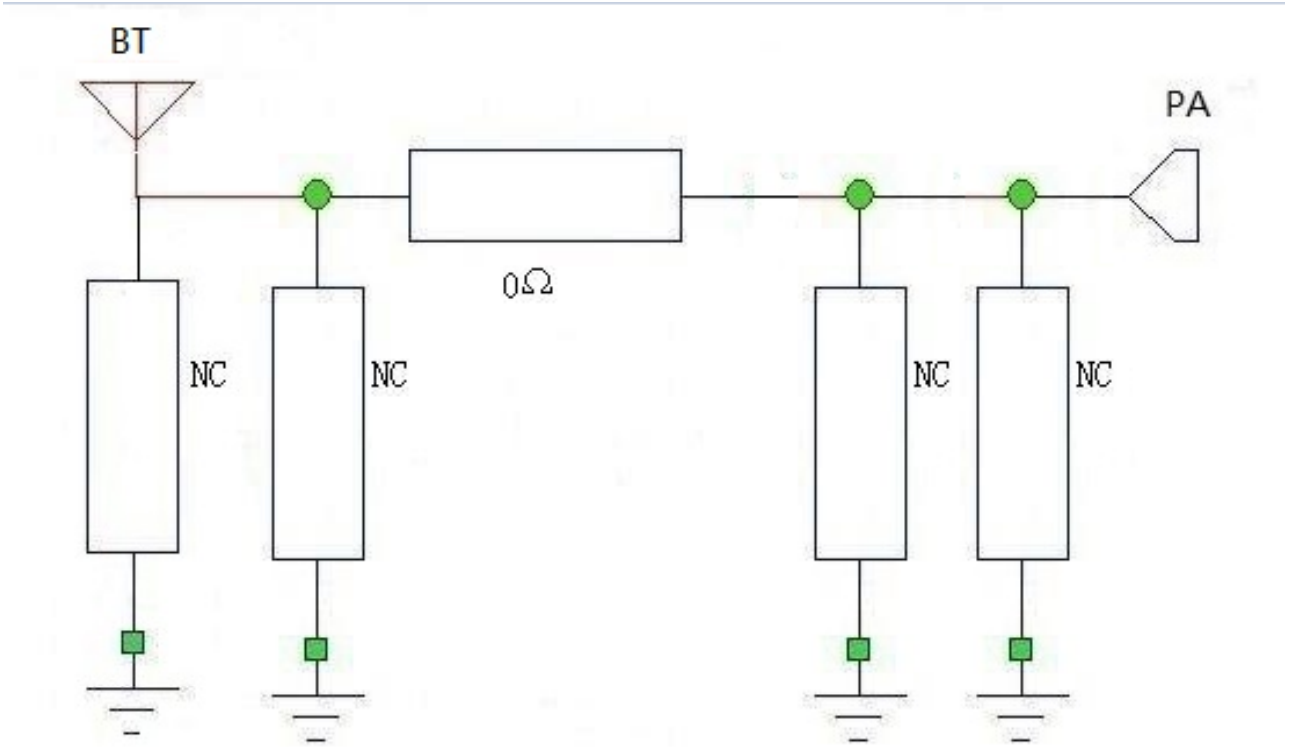

add：东莞市长安镇沙头社区木鱼路59号元富工业区 Tel:0769-82586086 Fax:0769-82586086

Device	

add：东莞市长安镇沙头社区木鱼路59号元富工业区 Tel:0769-82586086 Fax:0769-82586086

Antenna BT	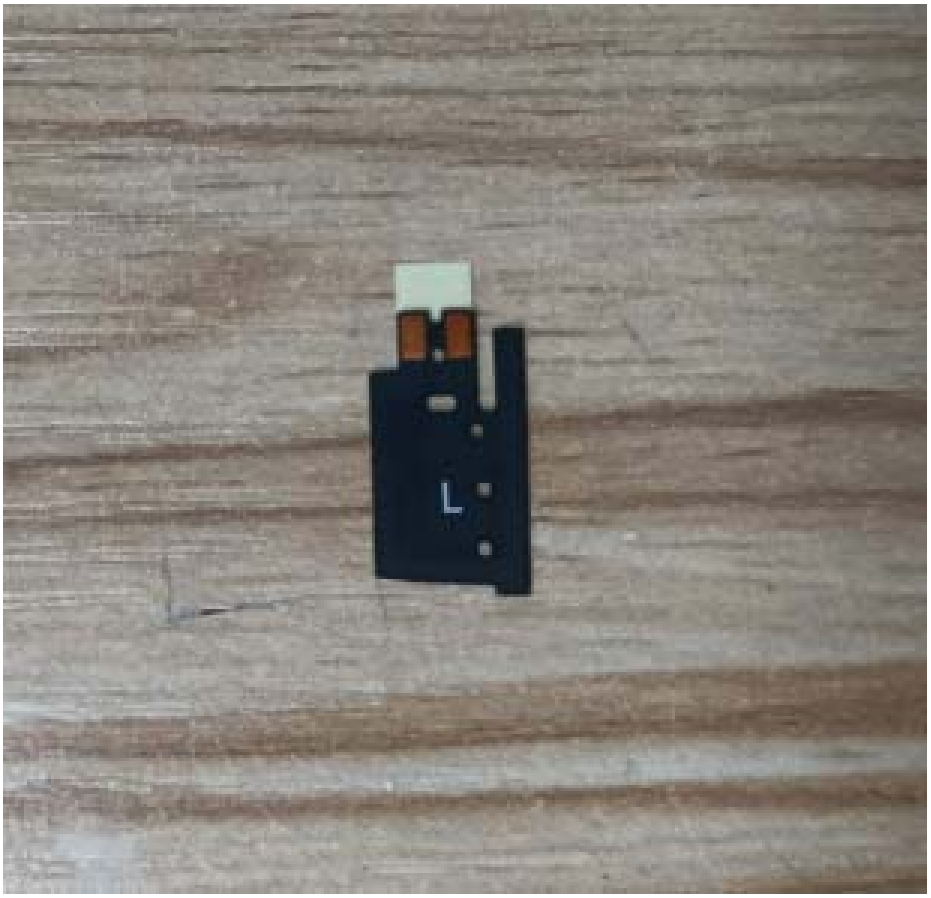

add：东莞市长安镇沙头社区木鱼路59号元富工业区 Tel:0769-82586086 Fax:0769-82586086

BT Ant R

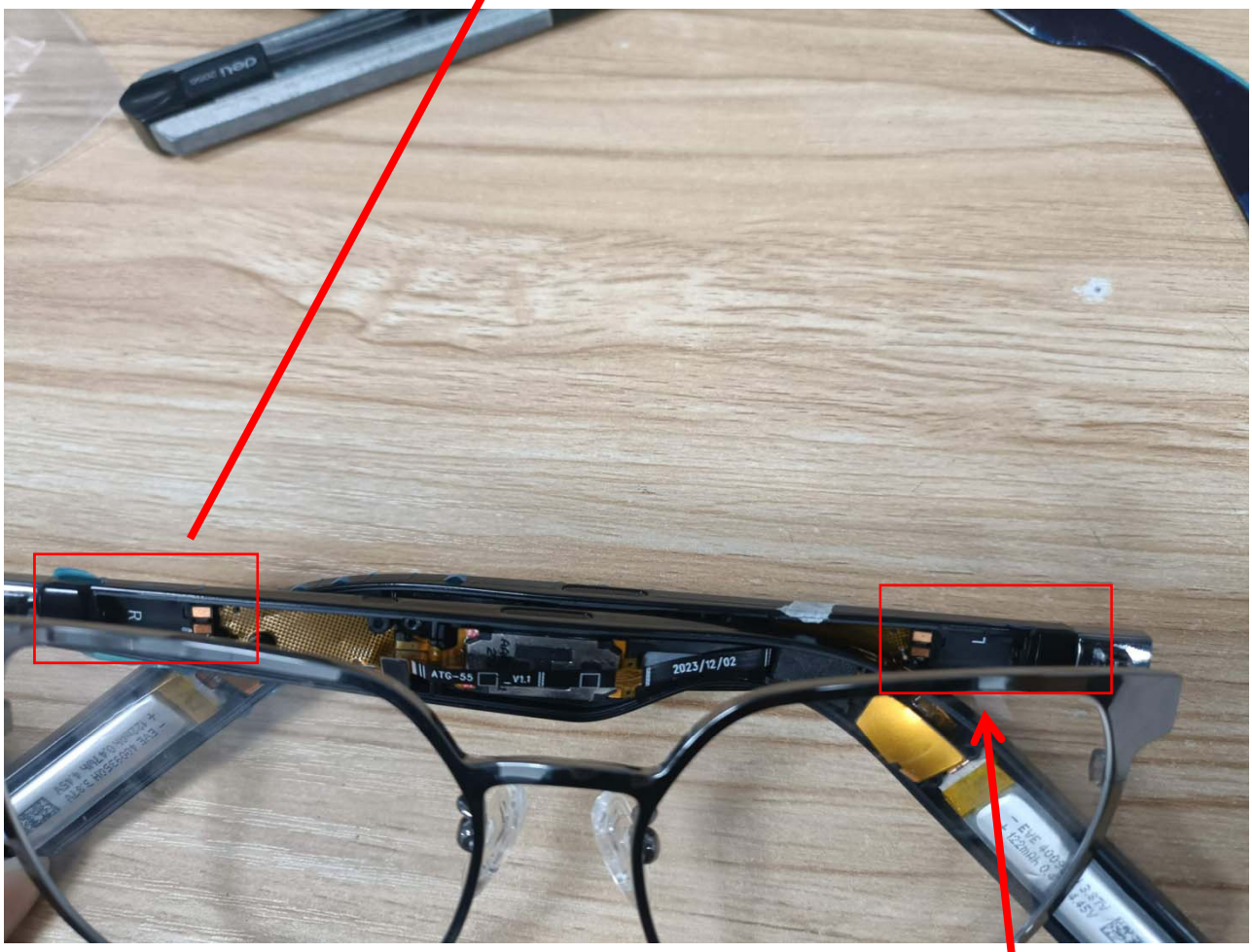

BT Ant L

add：东莞市长安镇沙头社区木鱼路59号元富工业区 Tel:0769-82586086 Fax:0769-82586086

Material safety data (MSDS)

1、 Item and manufacturer information page: 1 / 2

Item name: FPC antenna electroplated nickel and gold (flexible printed circuit)
Other names: FPC nickel gold coating
Recommended use and restricted use: communication products
Name of manufacturer or supplier: Dongguan Xiaoge Electronic Technology Co., Ltd
Address of manufacturer or supplier: 1 / 2 / F, Sanxing Road, Fenghuang Middle Road, Shajiao community, Humen Town, Dongguan City
Emergency contact / Fax:

2、 Hazard identification data

Hazard classification: other dangerous substances, acute toxic substances, grade 4 (swallowing, skin, inhalation)
Label content: Symbols: other dangerous objects, exclamation marks Warning: warning Hazard warning message: harmful if swallowed, harmful if inhaled Hazard prevention measures: put the container in a well ventilated place; avoid contact with skin and eyes; in case of accident or discomfort, consult medical treatment immediately
Other hazards:-

3、 Component identification data

mixture

Chinese and English Name: nickel CAS no.7440-02-0 percentage 98.95% Gold CAS no.7440-57-5 percentage 1% Brightener CAS no.6155-57-3 percentage 0.05%
Synonymous Name: gold finger nickel gold layer
Case No
Composition of hazardous substances (percentage of components)

4、 First aid measures

First aid methods for different exposure routes: Inhalation: - irritates respiratory tract Skin contact: wash the contact area with soap and water Eye contact: flush with plenty of water for more than 15 minutes and seek medical assistance Ingestion: drink plenty of water and seek medical assistance
The most important symptom and harmful effect: irritant.
Protection of first-aid personnel: wear class C protective equipment to implement first aid in safe area
Tips for doctors: patients should be given oxygen when inhaled.When swallowing, consider gastric lavage.

5、 Fire fighting measures

Suitable extinguishing agent: Carbon dioxide, chemical powder, water mist, alcohol foam.
Special hazards that may be encountered during fire fighting: When heated to dry, the salt will decompose to produce carbon monoxide and carbon dioxide.
Special fire fighting procedures: 1.Spray water mist to cool containers exposed to fire.2. Spray water to wash away the leakage to avoid exposure.
Special protective equipment for fire fighters: If necessary, wear a full body chemical protective respirator

6、 Physical and chemical properties page: 2 / 2

	State of matter	colour	smell	proportion	melting point	boiling point
NI	solid state	silvery white	tasteless	8.9	1453Temperature	2732Temperature
AU	solid state	yellow	tasteless	19.3	1064Temperature	2807Temperature
Brightener	liquid state	Light brown	tasteless	1.1	NA	NA

7、Safe handling and storage methods

management: Avoid contact with eyes, skin and clothing, wear personal protective equipment and do not inhale mist
Storage: Store in a cool, dry place

8、 Waste disposal methods

Waste disposal method: 1.According to the current laws and regulations. 2.According to the manufacturer's treatment, the waste to be treated should be treated first 3.In accordance with the relevant national and local government industrial wastewater discharge standards

9、 Leakage treatment method

Personal precautions: wear appropriate personal protective equipment.
Environmental precautions: ventilate the leakage area.

Cleaning method: dilute with a large amount of clean water, and wash and discharge to the ditch.

10、 Exposure precautions

Engineering control: 1. Local exhaust device; 2. Overall air exchange device; 3. The ventilation system should be made of corrosion-resistant materials and separated from other exhaust systems.

Control parameters			
Eight hour daily average Allowable concentration TWA	Short time volume average Allowable concentration STEL	Maximum permissible concentration CEILING	Biological indicators BEIs
1mg/m3	2mg/m3	-	-

Personal protective equipment:
Respiratory protection:-
Hand protection: impervious gloves made of natural rubber, butyl rubber and polyvinyl alcohol.
Eye protection: chemical safety goggles, face mask.
Skin and body protection: impermeable clothes and work shoes made of the above rubber materials

Health measures:
1.Take off contaminated clothes as soon as possible after work, and wash them before wearing or discarding them. Moreover, the laundry staff should be informed of the hazards of pollutants
2.Smoking or eating is strictly prohibited in the workplace.3. Wash hands thoroughly after handling.4. Keep the workplace clean

11、 Stability and reactivity

Stability:
It is stable under normal condition. If heated to the melting point, sublimation and decomposition may occur.

Possible hazardous reactions under special conditions:
1.Alkali: may react violently, producing heat and pressure.2. Oxidant (such as sodium chlorite, sodium hypochlorite): may produce violent or explosive reaction.3. Silver: may travel explosive silver oxalate.4. Alkali metals (such as sodium or potassium): may react violently to produce flammable hydrogen.5. Iron and ferrites (such as iron oxide): may react rapidly to form ferric oxalate.6. Acyl chloride: may react violently to form toxic fumigation.7. Heating

Conditions to avoid: heat

Substances to avoid:
1.Alkali.2. Oxidant 6. Acid

Hazardous decomposition products: None

12、 Toxicity information

Exposure route:-

Symptoms:-

Acute toxicity: none
Inhalation: None
Skin: no irritation
Eyes: no irritation
Ingestion: no burning sensation, abdominal pain, nausea, vomiting in the mouth and throat

Chronic toxicity or long-term toxicity:
1.May cause kidney stone, dysuria and pain.2. It may cause weight loss and chronic upper respiratory tract inflammation.3. It can cause local skin pain, ulceration or necrosis and nail discoloration.

13、 Ecological information

Biological toxicity: LC50 (FISH)-
EC50 (aquatic invertebrates)-
Bioconcentration coefficient:-

Persistence and degradation:-

Bioaccumulation: it is not likely to decompose in the body, and most of it will be discharged from the urine in the form of oxalic acid or calcium oxalate. This insoluble salt will accumulate in the body like a stone, causing kidney and urethral stones.

Mobility in soil: when released into soil, it may seep into groundwater and biodegrade.

Other adverse effects:-

14、 Delivery information

UN number: - un1760corrosive life

UN transport Name:-

Transport hazard classification: category 9 other hazardous substances

Packing category:-

Marine pollutants (yes / no): no

Special transportation methods and precautions:-

15、 Regulatory information

Applicable regulations:
1.Rules for labor safety and health facilities.
2.General rules of dangerous and harmful substances.
3.The allowable concentration standard of harmful substances in the air of labor working environment.
4.Road traffic safety rules.
5.Methods and facilities standards for storage, removal and disposal of industrial wastes.

16、 Other data

reference	MSDS database
Tabulator unit	Name: Dongguan Xiaoge Electronic Technology Co., Ltd

	Address / Tel: 1 / 2 / F, beside Sanxing Road, Fenghuang Middle Road, Shajiao community, Humen Town, Dongguan City	
Tabulator	Title: quality controller	Name (seal): Huang Huanwen
Date of tabulation	2020-12-01	
remarks	The symbol "-" in the above data indicates that there is no relevant data at present, while the symbol / "indicates that this field is not applicable to the substance	

， 安 全 資 料 表

版權 2021-01-10

First, chemical products and materials for business

Chemical name: PSM-800FSDM-A/SMH-800 liquid solid plate ink
Other names:
Use and restricted use of construction: flexible printed circuit board (PI/Cu), hand machine roof board
Name, address and address of the creator, entrant or supplier: Creator: Yueli Reachability Co., Ltd. Address: No.22 Jingjian Fourth Road, Guanyin District, Taoyuan City: 886-3-4836651
Urgent/true: 886-3-4836651, true: 886-3-4837487

Second, the hazard identification of resources and materials

Hazard classification of chemical products:
Health and environmental hazards: Acute toxicity (swallowing) 4, rot/skin irritation 2, heavy weight/eye irritation 2, skin Pass sensitive substance first, carcinogenic substance second, and hazardous substance second (acute toxicity).
Indication of content: Symbol number: Warning language: Warning hazard warning interest: Harmful to swallow Cause skin irritation Causing severe eye irritation may cause skin hypersensitivity and suspected carcinogenesis Toxic to aquatic organisms Hazard prevention measures: Put the container in a place with good ventilation far away from the high temperature Do not eat or drink when using Remove the blindfold/face mask immediately when your clothes are contaminated If you touch your eyes, wash them with plenty of water immediately, and then ask the mud to wear suitable gloves Do not inhale gas/gas/steam gas/gas before use Place it in the upper lock Do not place until you know all safety precautions Avoid releasing release in the environment
Other hazards:-

III. Composition identification of PSM-800FSDM-A/SMH-800

capital mixture:

Liquid solid plate ink PSM-800FSDM-A/SMH-800		
Chemical geology:		
Chinese and English names of hazardous components	Register number of Chemical Digest Service (CAS No.)	Degree or degree (percentage of components)
Oxygen acrylate oligmer Epoxy acrylate oligmer	28064-14-4	50%
Silicon dioxide Fused silica	7631-86-9	13%
Aromatic solution	64742-94-5	4%

Methyl dipropylene glycol	34590-94-8	4%
Carbon black	1333-86-4	3.5%
BaSO4 sulfate	13462-86-7	24%
Photoinitiator and the others	5495-84-1	1.5%

Fourth, first aid measures

First aid methods for the same road:

Inhalation: 1. Take self-protection measures before rescue.

2. Remove pollution sources or move patients to new places.

3. If a patient stops breathing, artificial respiration should be given immediately by the person who has been adalmed. If the heart stops, cardiopulmonary resuscitation should be given. When the patient inhales and swallows toxic substances, mouth-to-mouth artificial respiration should be used directly, and pocket masks and other medical equipment should be used for artificial respiration.

4. Maintain the patient's safety and normal temperature. 6. Treat the cure quickly.

Pi Mo: Wash the contaminated area with harmonious water for at least 20 minutes, and remove contaminated clothes, shoes and leather products before water. Eye touching: Immediately open the eyelids and wash the contaminated eyes with water for at least 20 minutes, and immediately take care of them.

Intake: 1. If the patient will be frustrated, or has been frustrated, he can feed anything.

2. It can induce vomiting and give 240-300ml of water.

3. If you vomit spontaneously, rinse your mouth and supply water repeatedly.

The most important diseases and harmful effects:-

Protection against first aid workers:-

Tips for doctors:-

V. Fire measures

Suitable for fire: chemical dry powder, wine foam, carbon dioxide, water, fire: water, water, foam water.

Special hazards that may be encountered during fire;

1. Its steam gas and decomposition products are burning and toxic.
2. Its steam gas is heavier than its empty gas, and it can spread to distant fire sources and give birth to tempering.
3. The combination of steam and big gas may lead to explosion.
4. When this object is indoors, outdoors or in sewers, it is in danger of steam explosion.

Special Fire Procedure:

1. In a safe distance from the place of fire, keep in the upwind position.
2. You can use water containers to disperse steam gas to wash the leakage and sparse the leakage, so as to protect the rescue staff.
3. Water in the flame of the container around, so that the container is cold, until the fire is cold. Keep the bottom of the container safe.
4. Poker or move all ignition sources.

Special protection of firefighters: Firefighters must wear air respirators, fire clothing and protection gloves.

VI. Leakage and management methods

Things people should pay attention to:

1. Restrict personnel from entering until the spillover area is completely cleaned up.
2. The work of cleaning up by the person who is negated.
3. Wear appropriate civil air defense.

Attention to matters in the environment:

1. Remove the ignition source.
2. Maintain ventilation in the leakage area.
3. Be in the upper wind and avoid going into the lower place.
4. Remove or separate burning and combustible materials under conditions that endanger the safety of people.
5. At least 100 to 200 meters away from the pollution source.

Cleaning method:

1. You can touch the leaked materials.

2. Avoid leakage entering sewers or dense spaces.
3. Where safety permits, prevent or reduce spills.
4. Block the leakage with soil, sand or similar and combustible objects that will respond to the leakage.
5. When there is a small amount of spill, it should be absorbed by the reaction with the leakage. Contaminated absorbed and discharged materials have the same model
6. Harmfulness must be placed in the appropriate container that is covered and indicated. Wash the spill area with water.
7. When there is a large amount of spill: fire fighting, emergency management and business response to seek help.

VII. Safe Location and Storage Methods

Place:
1. It is stored in a place where it is dry and ventilated, and avoids direct light and ignition source.
2. Far away things such as strong oxides, strong acids and water.
3. Use grounding, use the device without spark, and ventilate the wind system.
4. Store a small amount in the refrigerator, and use the explosion-proof refrigerator.
5. Department of police reports leaked outside the city.
6. It is necessary to separate the storage area from the work area, restrict people from entering and leaving the storage area, and show warnings.
7. Avoid collision, and the nearest fire system.
8. You can work alone, and another person needs to be on standby for rescue.
9. In the work area, use the containers that can be used to burn the liquid body, and all the barrels and slots should be grounded, and the containers must be connected to each other.
10. Use the smallest possible amount, and use a suitable ventilation system in the designated area.
11. The target indication container should be covered when in use.

Storage:
1. It is stored in a place where it is dry and ventilated, and avoids direct light and ignition source.
2. Store a small amount in the refrigerator, and use the explosion-proof refrigerator.
3. It is necessary to separate the storage area from the work area, restrict people from entering and leaving the storage area, and show warnings.
4. The target indication container should be covered when in use.

Eight, the preventive measures

Engineering control:
1. The wind system of the single use of the step to generate sparks and grounding.
2. The discharge port leads directly to the outside, and the important measures for protection are taken.
3. When using this object in large quantities, it may be necessary to install local gas and process dense.
4. Supply fully new and fresh air gas to supplement the air gas drawn out by filling and discharging the air gas system.

Control number:-
Average capacitance of eight small hours/average capacitance of short hours/maximum capacitance:-
Biological fingerprint:-

Civil air defense:

:: Breathing protection: 1. Chemical materials containing machine vapor poison cans or self-made breathing protection equipment.

2. Constant quantity type gas supply type breathing protection device, animation type breathing protection device containing machine steamed gas pot, mask containing machine steamed gas pot, comprehensive self-galvanizing breathing protection device, comprehensive gas supply type breathing protection device, and comprehensive chemical school poison breathing protection device containing machine steam poison pot. 3. Positive full-blown breathing protection equipment or positive full-blown gas-supplied breathing protection equipment with auxiliary positive self-blown breathing protection equipment.

4. There is a mask for steaming gas canister, and an escape type self-breathing protection tool.

Hand protection: Butyl rubber is the best, chlorinated polyethylene, polyvinyl acid, fluorinated cortex, butyl rubber/chloroprene rubber, fluorinated rubber, chloroprene rubber/natural rubber galaxy cover, fluorinated cortex/chloroprene rubber are also good anti-scorching gloves.

Eye protection: 1. Anti-chemical safety eye protection.

2. Full cover.

3. Don't wear shaped eyes.

1. Work shoes and body clothes.

2. There should be a bath/wash in the work area.

The measures for living:

1. Remove contaminated clothes quickly after work, and then wear them after washing them.

2. The work place is forbidden to smoke cigarettes or eat. 3. After taking care of this thing, you must wash your hands. 4. Keep the property clean.

IX. Physical and Chemical Geology

Outside (physical state, color, etc.): black cream	Gas flavor: bad smell
Olfactory value:-	Melting level:-25 ℃
PH value:-	Boiling/boiling: 218-219 ℃
Combustibility (solid and gas):-	Fire: > 75 ℃
Decomposition temperature:-	The method of wearing a cup: () carrying a cup (V) wearing a cup
Spontaneous combustion temperature: spontaneous combustion	Explosion boundary:-
Steaming gas:-	Steaming density: 6.07
Density: 1.24 ~ 1.26 (water = 1)	Solubility: Slightly soluble in water
Octanol/water partition number (log Kow):-	Dispersion rate:-

X. Stability and Reaction

Stability: Stability under sealed dry container.
Possible hazard response under special conditions:-
Types to be avoided: leakage, flame and other ignition sources.
Things to avoid: acid, oxidation
Hazardous decomposition: carbon monoxide

XI. Toxic Materials

The road: leather, inhalation, eyes, food
Symptoms: irritation, drowsiness, dizziness, tiredness, pain, nausea, difficulty breathing and
Acute toxicity: Inhalation: 1. Steaming gas will irritate nose, throat and lungs. Pi Fou: 1. Liquid body or solution will cause heavy irritation and burning pain. 2. Steaming gas can cause irritation. 3. After being picked up by the skin, the liquid will be absorbed to the poisoned amount. Eyes: 1. Steaming gas will irritate eyes and stimulate them. 2. Liquid body will cause heavy burning and injury to eyes. Intake: 1. It will cause bright local irritation to the mouth and digestive tract.
Chronic toxicity or long-term toxicity:-

Twelve, raw materials

Raw toxicity:-
Persistence and degradation: Avoid entering the water source inlet and waterway, which is harmful to aquatic organisms.
Bioaccumulability:-
Reactionality in soil:-
Other good effects:-

XIII. Methods of abandoning and abandoning places

Discarding method: 1. Examining the principle of phase method. 2. According to the pieces of the store to be disposed of waste materials. 3. Specific incineration or burial can be used.

Fourteen, Dictate to send materials

Lian He Guo Bian No.:-

版權 2021-01-10

The name of the joint country is:-
Classification of the hazards of Dirk: It is judged as ordinary goods according to Fujian Commercial Report 0128227
Packaging and fitting: It can be arranged according to ordinary goods
Marine pollutants (yes/no): no
Special delivery methods and precautions:-

XV. French Materials

Suitable usage: 1. If you work safely, you will be able to apply it 2. Road traffic safety rules 3. Methods and standards for the storage and removal of waste materials 4. Harmful academic products and general knowledge 5. What you can do in your work, what you can do, and what you can do

XVI. Other materials

Take part in the text	1. RTECS Materials, TOMES PLUS CD-ROM, Vol. 41, 1999 2. HSDB Materials, TOMES PLUS CD-ROM, Vol. 41, 1999	
Superficial site	Mingjia: Youli Lian Lian Co., Ltd.	
	Address/: No.22, Jingjian Fourth Road, Guanyin District, Taoyuan City: 886-3-4836651	
Table person	Calling for: the principle of science and technology	Name (Seal): Huang Zhihui
Table date	2021.01 1.10	
Per	Among the above-mentioned materials, "-" means that there is no related materials at present, while the symbol number "/" means that this person is compatible with the material and is suitable for use	

The above-mentioned materials are provided by our company, which is correct for the above-mentioned materials, but it is still difficult to avoid them. The materials and materials of each project are only for reference, and users should judge their availability according to their corresponding needs.

JIU JIANG
Flex Co., Ltd
1210 Qianjin Road(E), Jiujiang Jiangxi,China 332006
Tel: 86-792-8358899, Fax: 86-792-8355803

MATERIAL SAFETY DATA SHEET

SECTION 1 PRODUCT AND COMPANY IDENTIFICATION

1.1 Material Name: Flexible Copper-Clad Polyimide Laminates
1.2 Part Number: LPI-HF
1.3 Use of Material: Printed Circuit Boards
1.4 Date of Prepared: April 22nd, 2021
1.5 Company Identification: Jiu Jiang Flex Co., Ltd.
1210Qianjin Road (E) Jiujiang, Jiangxi, China 332006
1.6 Emergency Telephone Number: 86-792-8358899
1.7 Telephone Number for Information: 86-792-8358899, 8355813

SECTION 2 COMPOSITION/INFORMATION ON INGREDIENTS

Composition / substance		CAS#	%
PI	polyimide	25038-81-7	2.93~28.11
Adhesive	Epoxy resin	25036-25-3	2.42~6.81
	Flame Retardant (additive type)	225789-38-8	0.49~1.36
	Rubber	9003-18-3	1.45~3.99
Copper foil	Copper	7440-50-8	92.66~59.72

SECTION 3 HAZARDOUS IDENTIFICATION

Dust, soot, combustion gases produced when burning, of inhaled, ingested or absorbed through skin it will be harmful or irritating to the eyes, skin, mucous membrane, respiratory system, allergies can be caused to skin, flammable irritating and sensitive.

SECTION 4 FIRST-AID MEASURES (on Dust)

Inhalation:
Remove to fresh air. Obtain medical attention if symptoms persist.

Eye Contact:
Flush immediately with large amounts of water. Do not rub eyes. Obtain medical attention if symptoms persist.

Skin Contact:
Wash area of contact thoroughly with soap and water. Do not rub or scratch. Obtain medical attention if symptoms persist.

Ingestion: Drinking water as much as possible, emetic, and see doctor.

1210 Qianjin Road(E), Jiujiang Jiangxi,China 332006
Tel: 86-792-8358899, Fax: 86-792-8355803

SECTION 5 FIRE FIGHTING MEASURES

Extinguishing Agents

Following extinguishing media can be used:
Carbon dioxide extinguisher
Dry powder fire extinguisher
Water Pump
Foam fire extinguisher

Hazards of Unusual burning and Explosion:

The material produces carbon monoxide, carbon dioxide, nitrogen, oxides of nitrogen, smoke and dust when extremely high temperature or burning.

Personal Protective Equipment

As in any burning, wear self-contained breathing apparatus and full protective gear.

Upper limit of Flammability: not ascertained

SECTION 6 EMERGENCY HANDLING OF LEAKAGE

Emergency handling:

Block the leakage area to avoid dust flying and wear protective equipment, use vacuum cleaner to clean the leakage.

SECTION 7 HANDLING AND STORAGE

Handling: Wear cotton gloves to protect product damage and hand lacerated.

Storage conditions

The material should be stored in dry, ambient temperature wrapped with PE film.

Environment: Keep away from heat, ignition sources, and direct sunlight.

Other conditions: Keep cartons tightly closed when not in use.

SECTION 8 EXPOSURE CONTROLS / PERSONAL PROTECTION

Respiratory protection:

No general requirements. If the occurrence of dust, gas or smoke processing or processing, is stimulating to employees, to use NIOSH/MSHA approved respiratory protection measures. Engineering control should be excluded from the need for respiratory support.

Ventilation:

Once air exhaust exposure exceeds limits, or visible smoke, dust, exhaust gas, the ventilation at site should be accompanied by all the heat process at the same time.

Mechanical operations:

Optimize and follow good industrial operation as possible as you can.

Eye Contact:

With eye-glasses on during all process

SECTION 9 PHYSICAL AND CHEMICAL PROPERTIES

Appearance	PI film Copper-Clad Laminate with adhesive
Physical State:	solid
PH:	Not Applicable
Melting point:	no data
Relative density (water =1):	more than 1
Boiling point:	no data
The relative vapor density (air =1):	more than 1
Saturated vapor pressure (kPa):	Not Applicable
Heat of combustion (kJ/mol):	no data
The critical temperature (c):	Not Applicable
The critical pressure (MPa):	Not Applicable
The octanol / water partition coefficient of numerical:	Not Applicable
Flash point（℃):	Not Applicable
Upper explosive limit% (V/V):	Not Applicable
Ignition temperature (c):	no data
The lower limit of explosion% (V/V):	Not Applicable
Solubility:	insoluble
Application:	used for making printed circuit board

SECTION 10 STABILITY AND REACTIVITY

Stability:

Storage for one year at 5℃ to 30℃ and RH less than 75%

Conditions to Avoid:

High Humidity, direct sunlight,

The copper side may have violent reaction with followings:

Acetylene, ammonium nitrate, bromide, chlorate, iodic acid, chlorine, ClF_3, $Pb(N_3)_2$, (Cl_2+OF_2), ethylene oxide, fluoride, hydrogen peroxide, nitric acid hydrazide, hydrazoic acid, H_2S, K_2O_2, NaN_3, Na_2O_2.

SECTION 11 TOXICOLOGICAL INFORMATION

Sensitization: Long time skin contact may cause dermatitis

Acute Poisoning: Inhalation of dust may cause thirst, fever, headache, weakness, symptom of respiratory disorders.

1210 Qianjin Road(E), Jiujiang Jiangxi,China 332006
Tel: 86-792-8358899, Fax: 86-792-8355803

SECTION 12 ECOLOGICAL INFORMATION

Normal condition: No big influence may caused to ecology.
Waste Disposal Method
To dispose based on local, state or national laws.
Tank treatment: Not applicable.

SECTION 13 DISPOSAL CONSIDERATION

Hazardous wastage: NO.
Waste Disposal Method
To bury or burn at specified place based on national laws.

SECTION 14 TRANSPORTATION INFORMATION

No special regulation on this product for domestic or international transportation.

SECTION 15 REGULATORY INFORMATION

Must be complied with domestic or local regulation

SECTION 16 REGULATORY INFORMATION

14.1 INTERNATIONAL REGULATIONS:
EU Directive 2011/65/EU (RoHS): Compliant

SECTION 17 OTHER INFORMATION

Issued by: QC Department of Jiu Jiang Flex Co., Ltd
Disclaimer:
The data sheet information is true and accurate, but all statements and recommendations do not contain any guarantee. The consequence of the material shall be from practice. This report does not include all the circumstances that the user may encounter during operation. Each aspect of the operation may be increased or decreased during operation. All health and safety information contained in this report shall be submitted to you employees and customers. Users are responsible to take appropriate measures in practical operations.

CHUNG YU INDUSTRY CORPORATION

Material Safety Data Sheet

Section 1： Chemical Product and Company Identification

Product name	Thermal curable two-component marking ink
Other means of identification	ZSR-150 ZM-400WF
Recommended use of the chemical and restrictions on use	Use in PCB fabrication.
Manufacturer/Supplier identification	CHUNG YU INDUSTRY COPORATION
Manufacturer/Supplier address	618 Yen-Ping Rd., sec. 3, Ping-Jeng, Tao-Yuan, Taiwan
Emergency telephone No.	(886-3)4641205
FAX No.	(886-3)4644839

Section 2： Hazards Identification Information

Hazard classifications of the product	Inflammable liquids(II),Carcinogens, (II), Inhalation of hazardous substances (I)
Label elements	 Hazard symbols: Fire Caution catchwords: Danger Hazard massages: Inflammable liquids and vapor Harmful to swallow Skin irritation Eye irritation
Other hazards	—

Section 3： Composition, Information on Ingredients

Mixture：

Chemical name	Concentration(% of contents)	CAS. NO.
Epoxy resin	50	25085-99-8
Barium sulfate	15	7727-43-7
Titanium dioxide	30	13463-67-7
Naphtha	5	8030-30-6

Section 4 ： First-aid Measures

The first-aid measures for different exposure routes:	
Eyes contact	Immediately flush eyes with plenty of water for at least 15 minutes, occasionally lifting the upper and lower eyelids.
Skin contact	Flush skin with plenty of soap and water for at least 15 minutes while removing contaminated clothing and shoes.
Swallow	Do not induce vomiting. If conscious and alert, rinse mouth and drink 2-4 cupfuls of milk or water.
Inhalation	Remove from exposure to fresh air immediately.
The most important symptoms and hazardous effects	Headache, nausea
Notes to Physicians	Please provide the MSDS for physicians.

Section 5： Fire-fighting Measures

Suitable fire extinguishing media	Chemical dry powders, chemical foam, carbon dioxide
General information	As in any fire, wear a self-contained breathing apparatus in pressure-demand, MSHA/NIOSH (approved or equivalent), and full protective gear. During a fire, irritating and highly toxic gases may be generated by thermal decomposition or combustion.
Specific fire-fighting methods	It’s not suitable to use water extinguish.

Section 6： Accidental Release Measures

Person-related precautionary measures	Do not inhale vapors / aerosols. Ensure supply of fresh air in enclosed rooms.
Environmental-protection measures	Do not allow to enter sewerage system.
Procedures for cleaning / absorption	Take up with liquid-absorbent material. Forward for disposal. Clean up affected area

Section 7： Safe Handling and Storage Measures

Handling	Wash thoroughly after handling. Remove contaminated clothing and wash before reuse. Avoid contact with eyes, skin, and clothing. Avoid ingestion and inhalation.
Storage	Store in a cool(15～25℃), dry place. Keep container closed when not in use.

Section 8： Exposure Controls Measures

Engineering controls	Use adequate general or local exhaust ventilation to keep airborne concentrations below the permissible exposure limits. Use process enclosure, local exhaust ventilation, or other engineering controls to control airborne levels.
Control parameters	

Term	8 hours time weighted averagw exposure limits TWA	Short-term exposure limits STEL	Maximum limits CEILING	Biological standards BEIs
Solvent	100ppm	125ppm	—	—

Personal protective equipment	Eye protection: Wear safety glasses and chemical goggles if splashing is possible. Skin protection: Wear appropriate protective gloves and clothing to prevent skin exposure. Clothing: Wear appropriate protective clothing to minimize contact with skin. Respirators: Wear a NIOSH/MSHA or European Standard EN 149 approved full-facepiece airline respirator in the positive pressure mode with emergency escape provisions.

Section 9： Physical and Chemical Properties

Physical state：paste	Color：white
Odor threshold：—	Odor：slightly pungent
pH value：—	Melting point：—
Decomposition temperature：—	Boiling point：110-190℃ (solvent)
Flammability(solid, gas)：—	Flash point：38-43℃ (solvent) Test methods：—
Autoignition temperature：—	
Vapor pressure：<5 mmHg @ 25℃ (solvent)	Explosion limits：—
Specific gravity/Density：1.45～1.55 g/cm^3 (water=1)	Solubility in water：insoluble

Section 10： Stability and Reactivity

Chemical stability	Stable under normal temperatures and pressures.
Conditions to avoid	Fire.
Incompatibilities with other materials	Strong oxidants.
Hazardous decomposition products	Irritating and toxic fumes and gases.
Hazardous polymerization	Has not been reported.

Section 11： Toxicological Information

Information on the likely routes of exposure	Skins, swallow, inhale, eyes
Symptoms	Nausea, vertigo, irritation
Acute toxicity	Skins: Slight irritation Swallow: Nausea, vomit, and the other symptoms same as inhale Inhale: Cause the respiratory tract irritation, nausea, vomit, headache Eyes: The vapor cause eyes irritation LD50(solvent): >5000mg/kg (mouse, swallow) LC50:－
Further information	Further hazardous properties cannot be excluded. The product should be handled with the usual when dealing with chemicals

Section 12： Ecological Information

Ecotoxic effect	Quantitative data on the ecologic effect of this product are not available.
Further ecologic data	No ecological problems are to be expected when the product is handled and due care and attention.

Section 13 - Disposal Considerations

Dispose of in a manner consistent with federal, state, and local regulations.

Section 14 - Transport Information

1. United Nation number (UN No.): 1866
2. UN proper shipping name: －
3. Transport hazard classes: 3
4. Packing group:－
5. Marine pollutant (Yes/No): No
6. Specific transport measures and precautionary conditions: －

Section 15 - Regulatory Information

1. European / International Regulations：European labeling in accordance with EC Directives.
2. Other using condition should follow local regulations.

Section 16 - Additional Information

Organization that prepared the MSDS	Name: R&D	TEL: (886-3)4641205	
	Address: 618 Yen-Ping Rd., sec. 3, Ping-Jeng, Tao-Yuan, Taiwan		
Person who prepared the MSDS	Job: manager	Name: Wan-Hua Lee	
Date the MSDS was prepared	2018/12/20		

The information above is believed to be accurate and represents the best information currently available to us. However, we make no warranty of merchantability or any other warranty, express or implied, with respect to such information, and we assume no liability resulting from its use. Users should make their own investigations to determine the suitability of the information for their particular purposes. In no way shall the company be liable for any claims, losses, or damages of any third party or for lost profits or any special, indirect, incidental, consequential or exemplary damages, howsoever arising, even if the company has been advised of the possibility of such damages.

Material Safety Data Sheet

Copyright, 2003, 3M Company. All rights reserved. Copying and/or downloading of this information for the purpose of properly utilizing 3M products is allowed provided that: (1) the information is copied in full with no changes unless prior written agreement is obtained from 3M, and (2) neither the copy nor the original is resold or otherwise distributed with the intention of earning a profit thereon.

This material safety data sheet (MSDS) is provided as a courtesy in response to a customer request. This product is not regulated under, and a MSDS is not required for this product by the OSHA Hazard Communication Standard (29 CFR 1910.1200) because, when used as recommended or under ordinary conditions, it should not present a health and safety hazard. However, use or processing of the product not in accordance with the product's recommendations or not under ordinary conditions may affect the performance of the product and may present potential health and safety hazards.

SECTION 1: PRODUCT AND COMPANY IDENTIFICATION

PRODUCT NAME: 3M(TM) Laminating Adhesives 9471LE, 9472LE, 9671LE, 9672LE, 9653LE, 9453LE
MANUFACTURER: 3M
DIVISION: Industrial Adhesives and Tapes
ADDRESS: 3M Center
St. Paul, MN 55144-1000

EMERGENCY PHONE: 1-800-364-3577 or (651) 737-6501 (24 hours)

Issue Date: 06/20/2003
Supercedes Date: 05/22/2001

Document Group: 08-9111-9

Product Use:
Specific Use: Laminating Adhesive

SECTION 2: INGREDIENTS

Ingredient	C.A.S. No.	% by Wt
TACKIFIED ACRYLATE POLYMER	None	100

SECTION 3: HAZARDS IDENTIFICATION

3.1 EMERGENCY OVERVIEW

Specific Physical Form: Roll of Tape
Odor, Color, Grade: Tan, Acrylate odor when unrolled.
General Physical Form: Solid
Immediate health, physical, and environmental hazards: This product, when used under reasonable conditions and in accordance with the 3M directions for use, should not present a health hazard. However, use or processing of the product in a manner not in accordance with the product's directions for use may affect the performance of the product and may present potential health and safety hazards.

3.2 POTENTIAL HEALTH EFFECTS

Eye Contact:
No health effects are expected.

Skin Contact:
No health effects are expected.

Inhalation:
No health effects are expected. This product may have a characteristic odor; however, no adverse health effects are anticipated.

Ingestion:
No health effects are expected.

SECTION 4: FIRST AID MEASURES

4.1 FIRST AID PROCEDURES

The following first aid recommendations are based on an assumption that appropriate personal and industrial hygiene practices are followed.

Eye Contact: No need for first aid is anticipated.

Skin Contact: No need for first aid is anticipated.

Inhalation: No need for first aid is anticipated.

If Swallowed: No need for first aid is anticipated.

SECTION 5: FIRE FIGHTING MEASURES

5.1 FLAMMABLE PROPERTIES

Autoignition temperature	*No Data Available*
Flash Point	*Not Applicable*
Flammable Limits - LEL	*Not Applicable*
Flammable Limits - UEL	*Not Applicable*

5.2 EXTINGUISHING MEDIA
Use fire extinguishers with class B extinguishing agents (e.g., dry chemical, carbon dioxide).

5.3 PROTECTION OF FIRE FIGHTERS

Special Fire Fighting Procedures: Wear full protective clothing, including helmet, self-contained, positive pressure or pressure demand breathing apparatus, bunker coat and pants, bands around arms, waist and legs, face mask, and protective covering for exposed areas of the head.

Unusual Fire and Explosion Hazards: No unusual fire or explosion hazards are anticipated.

Note: See STABILITY AND REACTIVITY (SECTION 10) for hazardous combustion and thermal decomposition information.

SECTION 6: ACCIDENTAL RELEASE MEASURES

Accidental Release Measures: Not applicable.

SECTION 7: HANDLING AND STORAGE

7.1 HANDLING

Avoid prolonged or repeated skin contact. This product is considered to be an article which does not release or otherwise result in exposure to a hazardous chemical under normal use conditions.

7.2 STORAGE

Not applicable.

SECTION 8: EXPOSURE CONTROLS/PERSONAL PROTECTION

8.1 ENGINEERING CONTROLS

Not applicable.

8.2 PERSONAL PROTECTIVE EQUIPMENT (PPE)

8.2.1 Eye/Face Protection

Avoid eye contact.

8.2.2 Skin Protection

Avoid prolonged or repeated skin contact. Gloves not normally required.

8.2.3 Respiratory Protection

Under normal use conditions, airborne exposures are not expected to be significant enough to require respiratory protection.

8.2.4 Prevention of Swallowing

Not applicable.

8.3 EXPOSURE GUIDELINES

None Established

SECTION 9: PHYSICAL AND CHEMICAL PROPERTIES

Specific Physical Form:	Roll of Tape
Odor, Color, Grade:	Tan, Acrylate odor when unrolled.
General Physical Form:	Solid
Autoignition temperature	*No Data Available*
Flash Point	*Not Applicable*
Flammable Limits - LEL	*Not Applicable*
Flammable Limits - UEL	*Not Applicable*
Boiling point	*Not Applicable*

Vapor Density	*Not Applicable*
Vapor Pressure	*Not Applicable*
Specific Gravity	Approximately 1.01 [*Ref Std:* WATER=1]
pH	*Not Applicable*
Melting point	*No Data Available*
Solubility in Water	Nil
Evaporation rate	*Not Applicable*
Volatile Organic Compounds	*No Data Available*
Percent volatile	*No Data Available*
VOC Less H2O & Exempt Solvents	*No Data Available*
Viscosity	*Not Applicable*

SECTION 10: STABILITY AND REACTIVITY

Stability: Stable.

Materials and Conditions to Avoid: None known

Hazardous Polymerization: Hazardous polymerization will not occur.

Hazardous Decomposition or By-Products

Substance	Condition
Hydrocarbons	During Combustion
Carbon monoxide	During Combustion
Carbon dioxide	During Combustion

Hazardous Decomposition: Under recommended usage conditions, hazardous decomposition products are not expected. Hazardous decomposition products may occur as a result of oxidation, heating, or reaction with another material.

SECTION 11: TOXICOLOGICAL INFORMATION

Please contact the address listed on the first page of the MSDS for Toxicological Information on this material and/or its components.

SECTION 12: ECOLOGICAL INFORMATION

ECOTOXICOLOGICAL INFORMATION

Not applicable.

CHEMICAL FATE INFORMATION

Not applicable.

SECTION 13: DISPOSAL CONSIDERATIONS

Waste Disposal Method: Dispose of waste product in a sanitary landfill. As a disposal alternative, incinerate in an industrial or

commercial facility.

Since regulations vary, consult applicable regulations or authorities before disposal.

SECTION 14:TRANSPORT INFORMATION

Please contact the emergency numbers listed on the first page of the MSDS for Transportation Information for this material.

SECTION 15: REGULATORY INFORMATION

US FEDERAL REGULATIONS

Contact 3M for more information.

311/312 Hazard Categories:
Fire Hazard - No Pressure Hazard - No Reactivity Hazard - No Immediate Hazard - No Delayed Hazard - No

STATE REGULATIONS

Contact 3M for more information.

CHEMICAL INVENTORIES

This product is an article as defined by TSCA regulations, and is exempt from TSCA Inventory listing requirements.

Contact 3M for more information.

INTERNATIONAL REGULATIONS

Contact 3M for more information.

This MSDS has been prepared to meet the U.S. OSHA Hazard Communication Standard, 29 CFR 1910.1200.

SECTION 16: OTHER INFORMATION

NFPA Hazard Classification
Health: 0 **Flammability:** 1 **Reactivity:** 0 **Special Hazards:** None

National Fire Protection Association (NFPA) hazard ratings are designed for use by emergency response personnel to address the hazards that are presented by short-term, acute exposure to a material under conditions of fire, spill, or similar emergencies. Hazard ratings are primarily based on the inherent physical and toxic properties of the material but also include the toxic properties of combustion or decomposition products that are known to be generated in significant quantities.

Reason for Reissue: The MSDS has been revised because 3M has adopted the 16-section ANSI/ISO format. The potential hazards of the product have not changed. We encourage you to reread the MSDS and review the information.

DISCLAIMER: The information in this Material Safety Data Sheet (MSDS) is believed to be correct as of the date issued. 3M MAKES NO WARRANTIES, EXPRESSED OR IMPLIED, INCLUDING, BUT NOT LIMITED TO, ANY IMPLIED WARRANTY OF MERCHANTABILITY OR FITNESS FOR A PARTICULAR PURPOSE OR COURSE OF PERFORMANCE OR USAGE OF TRADE. User is responsible for determining whether the 3M product is fit for a particular purpose and suitable for user's method of use or application. Given the variety of factors that can affect the use and application of a 3M product, some of which are uniquely within the user's knowledge and control, it is essential that the user evaluate the 3M product to determine whether it is fit for a particular purpose and suitable for user's method of use or application.

3M provides information in electronic form as a service to its customers. Due to the remote possibility that electronic transfer may have resulted in errors, omissions or alterations in this information, 3M makes no representations as to its completeness or accuracy. In addition, information obtained from a database may not be as current as the information in the MSDS available directly from 3M.

3M MSDSs are available at www.3M.com

MATERIAL SAFETY DATA SHEET

物 质 安 全 资 料 表

1 、CHEMICAL PRODUCT AND COMPANY IDENTIFICATION 产品和公司资料

1.1PRODUCT MAME：Polyimide reinforcement plate

产品名称：Pi 补强片

1.2PRODUCT USE：Flexible printed circuit Boards.

用途：用于挠性印制电路板.

1.3Product Model 产品型号

Model:HS2025、HS3025、 HS4025、 HS5025、 HS6025、HS7025、 HS8025、 HS9025、 HS10025

1.4 公司名称及地址：深圳市溢海通电子有限公司

NAME of COMPANY and ADDRESS：Shenzhen YiHaiTong Electronics Co.,ltd

广东省深圳市宝安区沙井后亭第二工业区 57 号福新大厦 B 栋 602

Building B, Fuxin Chuangke Building,
No.57 Baoan District, Shenzhen, China

Shajing Houting Second Industrial Zone,

FOR MORE INFORMATION CALL：

紧急联络电话：（Monday～Saturday,9:00am～6:00pm）

0755-33238080

IN CASE OF EMERGENCY CALL：

（24Hours/Day, 7 Days/Week）

0755-33238080

2 、COMPOSITION INFORMATION ON INGREDIENTS 组成成份资料

2.1 The main ingredient 主要成分

Ingredient name chemical abstract number weight ratio 成分名称 化学文摘号 重量比

Polyimide film 25038-81-7 30-50% 聚酰亚胺薄膜 25038-81-7 30～50%

Remove 10-25% of the release film / paper when it is used 离形膜/纸 使用时撕掉 10～25%

Acrylates 141-32-2 25-40% 丙烯酸酯 141-32-2 25～40%

Acrylic acid 79-10-7 10-20% 丙烯酸 79-10-7 10～20%

2.2 hazardous ingredients 危害物质成分

No. SGS Test Report:No.CANML1412085401, No.CANML1412085402

2.3 Molecular Structure:分子结构

3 、HAZARDS IDENTIFICATION 危害性资料

3.1 hazard class filled by GB13690-92 " Classification of hazardous chemicals used and signs " requirement.：
危险性类别 按 GB13690-92《常用危险化学品的分类及标志》规定填写。
Insoluble in water, no melting point , soluble in acid, alkali .
不溶于水，无熔点，易溶于强酸、强碱。
3.2Anonflammable sheet material，Fumes if decomposed may irritate eyes、nose and throat..
是一种难燃的片状材料。当分解时产生的气体会刺激眼睛、鼻和咽喉。
POTENTIAL HEALTH HAZARDS：
3.3 Abrief description of the extent of environmental harm when hazards caused by certain concentrations of various chemical and biological harm .
环境危害 简要描述化学品在一定浓度时对各种生物造成的危害及其造成危害的程度。
Produces CO2 and CO decomposition.
分解时会产生 CO2 和 CO。
3.4SKIN：Adhesive may cause moderate skin irritation.
皮肤：胶粘剂可能导致中等程度皮肤过敏。
3.5EYES：Adhesive may cause eye moderate irritated，Fumes may irritate eyes.
眼睛：胶粘剂可能导致中等程度眼睛过敏。
3.6INHALATION： Trace of chemical solvents may diffused to air in the processes of varnish preparation and
coating production.
吸入物：在涂覆生产过程中，会有很少量化学溶剂挥发出来。
3.7INGESTION：Not determined.
摄食：没有参考值。
4 、FIRST AID MEASURES 首要援助措施
SKIN：Washing the contaminated clothing in flowing water.
皮肤：脱下已污染衣服，用流动水冲洗。
EYE：Washing with flowing water for 15 minutes，consult the physician If irritation persists.
眼睛：用流动水冲洗 15 分钟，如过敏现象持续发生，请求助于医生。
INHALATION ： Such as dust, smoke to much move to fresh air. If can not breathe, give mouth-to-mouth
resuscitation and Call physician.
吸入：如粉末烟尘太多请转移到有新鲜空气的地方，如没有呼吸，请进行人工呼吸，并致电医生。
INGESTION：If large amounts are ingested, consult physician.
摄食：如摄入大量，请致电医生。
ADVICE TO PHYSICIAN：Treat symptomatically.
建议医生：处理出现的症状。
5 、FIRE FIGHTING MEASURES 火灾测试
FLAMMABLE PROPERTIES：N/A
易燃烧性：不适用
FLASH POINT：N/A
闪点：不适用
FLASH POINT METHOD：N/A
闪点方式：不适用

AUTOIGNITION TEMPERATURE：Not determined
自燃点温度：无规定
UPPER FLAME LIMIT（Volume% in air）：N/A
燃烧上限：不适用
LOWER FLAME LIMIT（Volume% in air）：N/A
燃烧下限：不适用
FLAME PROPAGATION RATE（Solids）： UL94 V-0
燃烧等级： UL94 V-0
OSHAFLAMMABILITY CLASS：N/A
燃烧级别：不适用
EXTINGUISHING MEDIA：Water, CO 2 and dry chemical.
灭火介质：水、CO 2 及干化学品
SPECIAL FIREFIGHTING PRECAUTIONS/INSTRUCTIONS：
特别火灾指导：
Firemen should wear proper protective equipment and positive pressure self-contained breathing apparatus.
消防员须身穿保护装置及正压呼吸设施。
6 、ACCIDENTAL RELEASE MEASURES 意外事故的应变措施
IN CASE OF SPILL OR OTHER RELEASE：（Always wear recommended personal protection equipment）
如有泄漏或其他释放：（通常身穿所推荐的保护设施）
Not applicable for the solid material.
不适用于固体材料。
Spills and releases may have to be reported to local authorities.
有关泄漏应报告当地政府。
7 、HANDLING AND STORAGE 仓贮指南
7.1Handing Precautions refers to the process of the operation of the safety of chemicals and personal protection
points to note.
操作注意事项 指对化学品操作过程中的安全注意要点和个体防护。
No.
暂无.
7.2Storage Precautions 存储注意事项
a)disposal: storage spaces non fireworks ,sit housekeeping standards to prevent dust.
处置：存放场所严禁烟火，做好整理、整顿以避免灰尘。
b)Storage: high stability, non-reactive under normal storage conditions.
存储：稳定性高，正常的存储条件下无反应。
8 、EXPOSURE CONTROLS ／PERSONAL PROTECTION 泄漏控制／个人保护
ENGINEERING CONTROLS：Use local exhaust ventilation to control dust..
工程控制：使用当地除尘通风设施。
PERSONAL PROTECTIVE EQUIPMENT：个人保护措施：
SKIN PROTECTION： For brief contact to dust,no precautions other than clean bodycovering clothing should
needed.Use gloves and aprons when prolonged or frequently repeated contactoccurs.

皮肤保护：对于短暂性的接触粉尘，需要时清洗身体或衣服，无预防措施。对于长期性的接触，要配
带手套和围裙。
EYE PROTECTION：Use appropriate eye protection when machining material.
眼睛保护：当加工材料时使用眼睛保护装置。
RESPIRATORY PROTECTION：When respiratory protection is required for certain operations, use a NIOSH-approved dust respirator.
呼吸保护：当进行产生大量粉尘的操作时使用规范的粉尘防毒面罩。
ADDITIONAL RECOMMENDATIONS：N/A
其它建议：不适用。
9 、PHYSICAL AND CHEMICAL PROPERTIES 物理化学性能
9.1Appearance products 产品外观
Yellow 、brown 、black and so on，odorless solid flake materials
黄色，棕色和黑色等，无味固体片状材料。
9.2PHYSICAL STATE：Solid
物理形态：固体
9.3ODOR：None，unless heated
气味：无味，除非加热
9.4Heat of combustion
燃烧热 94-V0
9.5SOLUBICITY IN WATER：（Weight%） Negligible in water
水溶性：（重量％）在水中可忽略
9.6The main purpose 主要用途
Mainly used in packing, printing, screen printing, pad printing, nameplates, membrane switches, flexible circuits,
Insulation products, circuit boards, laser security, laminating , electronic, film sealing material, reflective materials,
Waterproof material, medicine(plaster with paper),toilet paper, adhesive, die punching processing and other
industries.
主要应用于包装、印刷、丝印、移印、铭板、薄膜开关、柔性线路、绝缘制品、线路板、激光防伪、
贴合、电子、密封材料用膜、反光材料、防水材料、医药（膏药用纸）、卫生用纸、胶粘制品、模切冲型
加工等行业领域。
10 、STABILITY AND REACTIVITY 稳定性及反应性
10.1NORMALLY STABLE：（conditions to avoid）Stable
通常稳定：稳定
10.2INCOMPATIBILITIES：Not determined
不兼容性：不确定
10.3HAZARDOUS POLYMERIZATION？ None
危险聚合物：无
10.4Condition to avoid 避免接触的条件
Not available：无资料

10.5Decompositon products 分解产物
Produces Co 2 and Co decomposition.
分解时会产生 Co 2 和 Co.
11 、TOXICOLOGICAL INFORMATION 毒物学的资料
11.1Acute Toxicity 急性毒性
N/A
11.2Subacute and chronic toxicity 亚急性和慢性毒性
N/A
11.3Irritating 刺激性
N/A
11.4Sensitization 致敏性
N/A
11.5Mutagenicity 致突变性
N/A
11.6Carcinogenicity 致癌性
N/A
11.7Other 其他
N/A
12 、ECOLOGICAL INFORMATION 生态学资料
Not Biodegradable
非生物降解。
13 、DISPOSAL CONSIDERATIONS 处置问题
Is the unused product a hazardous waste substances list of country hazardous waste if discarded？No.
列入国家危险废物名录的危险废物不能够再利用时是否被丢弃？ 不。
OTHER DISPOSAL CONSIDERATIONS ： Dispose must be made in accordance with all applicable Local
regulations.
其它处置问题：处置必须遵循当地的法律法规。
Suggestion method after products will be discarded ：
⑴、Separate reuse method：crush products into powder, recycling as a filer.
⑵、Incineration method：incinerate the unused products, this method may cause organic compound gas.
⑶、Bury into deep earth.
产品报废之后有以下几种处置方法：
⑴、分离法：将产品粉碎，可作填充料；
⑵、焚烧法：焚烧过程中可能产生有机化合物气体；
⑶、填埋法。
14 、TRANSPORT INFORMATION 运输资料
For additional information on shipping regulations affecting this material,contact the information number found
on the first page.
附带资料是当运输规则影响到物料时，请和第一页所提供的联系方式联系。
15 、REGULATORY INFORMATION 法规资料

15.1Domestic Chemical Safety regulations 国内化学品安全管理法规

“Material Safety Data Sheet preparation specified range” GB/T 16483-2008

《化学品安全技术说明书编写规定范围》GB/T 16483-2008

“Chemical Dangerous Goods Safety Management Regulations”(February 17,1987 the State Council issued).

《化学危险物品安全管理条例》（1987 年 2 月 17 日国务院发布）

“Common Hazardous Chemicals and signs”(GB13690-1992).

《常用危险化学品的分类和标志》（GB13690-1992）

“Air Pollutant Emission Standards”GB16297-1996

《大气污染物综合排放标志》GB16297-1996

“Sour gas transportation safety regulations”SY6506-2000

《含硫气田安全输送规程》SY6506-2000

“Chemical Dangerous Goods Safety Management Regulation implementing rules”(the Labor Fa[1992] No.677)

《化学危险物品安全管理条例实施细则》（化劳发【1992】677 号）

“Industrial sites safe use of chemicals”(1996 workers are No.423)

《工业场所安全使用化学品规定》(1996 劳都发 423 号)

“Dangerous Goods Classification and code ”GB6944-1986

《危险货物分类和品名编号》GB6944-1986

“Transport of Dangerous Goods Package CATEGORYprinciple” GB/T15098-1994

《危险货物运输包装类别划分原则》GB/T15098-1994

“Transport of Dangerous Goods Management Regulations”(formerly the Ministry of Railways issued)1995

《危险货物运输管理规则》（原铁道部颁布）1995 年

These laws and regulations for the safe use of hazardous chemicals, production, storage, transport, handling, etc.

are made relevant regulations.

以上法规对化学危险品的安全使用，生产，存储，运输，装卸等方面均做了相关规定。

附加法规资料：

Shenzhen YIHAITONG Electronic Co., Ltd. does not use PBBs or PBDEs as flame retardant in the resin system of the products 深圳市溢海通电子有限公司 没有采用多溴联苯或多溴联苯醚作为阻燃剂在产品的树脂体系当中

16 、OTHER INFORMATION 其它资料 CURRENT ISSUS DATE：现在版本日期：2015-11-12

PREVIOUS ISSUE DATE：2014-6-25 首次版本日期：2014-6-25