# SG-HR-I1-IOL Technical Manual

# V1.0.1

IO-Link

The purpose of this practical manual is to provide the complete hardware appearance parameter, electrical parameter, necessary schematic circuit diagram of the SG-HR-I1-IOL high-frequency RFID reader. If necessary, corresponding modifications can be made to the deployment plan of the reader based on the information provided in the manual to adapt to the application situations in different industrial fields.The manual mainly includes the following contents:

- Functional description of the RFID reader
- RFID reader interface definition, mechanical and electrical parameters
- Cable cord set Pin definition, mechanical and electrical parameters

If you have any unclear information in the manual or any inconsistency with practical situations, please contact with us.

Contact Information:

- Guangdong Sygole Intelligent Technology Co., Ltd.
- Tel.: + 86-769-26627955

## *Specification for Marks in the Manual*

**Caution Sign**

If there is a "Caution Mark" in the manual, it indicates that the user needs to pay attention during use. If the user fails to follow or ignores such information during use, the equipment may be directly or indirectly caused to have abnormal operation. Please be careful to read the content with such mark.

Document change resume

| Version | Date | Content | Reviser |
|---|---|---|---|
| V1.0.0 | 2025/05/12 | First release | CZW |
| V1.0.1 | 2025/5/29 | Add FCC security information | HYQ |

# *Contents*

**1. Introduction of the RFID reader ..... 1**

1.1. Topology diagram of wiring ..... 1
1.2 Introduction to the functions ..... 1
1.3 Overview of the control command ..... 1

**2. Hardware instructions ..... 3**

2.1 Introduction of the interface ..... 3
2.2 Communication interface ..... 3
2.3 Indicator status ..... 4

**3. Enclosure parameters ..... 5**

3.1 Physical parameters ..... 5

**4. Electrical parameters ..... 6**

4.1 Power supply ..... 6

**5. Performance parameters ..... 7**

5.1 Environment requirements ..... 7
5.2 COM interface ..... 7
5.3 Air interface ..... 7
5.4 Service frequency ..... 7
5.5 Wireless Read-write Distance ..... 7
5.6 Certificates and other information ..... 7

**6. Installation method ..... 8**

6.1 Fixation ..... 8
6.2 Installation spacing ..... 8
6.3 Tag installation ..... 9

**7. Safety Information ..... 10**

# *Table Index*

Table 1 . Overview of control commands and functions ..... 2
Table 2 . Overview of the return messages and causation ..... 2
Table 3 . Definition of IO-Link interface (M12 A-Code 5pin Male) pins ..... 4
Table 4 . Description of LED indicators ..... 4
Table 5 . Physical parameters of the RFID reader enclosure ..... 5
Table 6 . Electrical parameters of the RFID reader power supply ..... 6
Table 7 . Output power of the RFID reader ..... 6
Table 8 . The RFID Reader working environment requirements ..... 7
Table 9 . The RFID reader communication parameters ..... 7
Table 10 . The air interface protocol ..... 7
Table 11 . Radio frequency of the RFID reader ..... 7
Table 12 . Wireless Read-write Distance ..... 7
Table 13 . Ingress protection, certificates and test standard ..... 7

# 1. Introduction of the RFID reader

## 1.1. Topology diagram of wiring

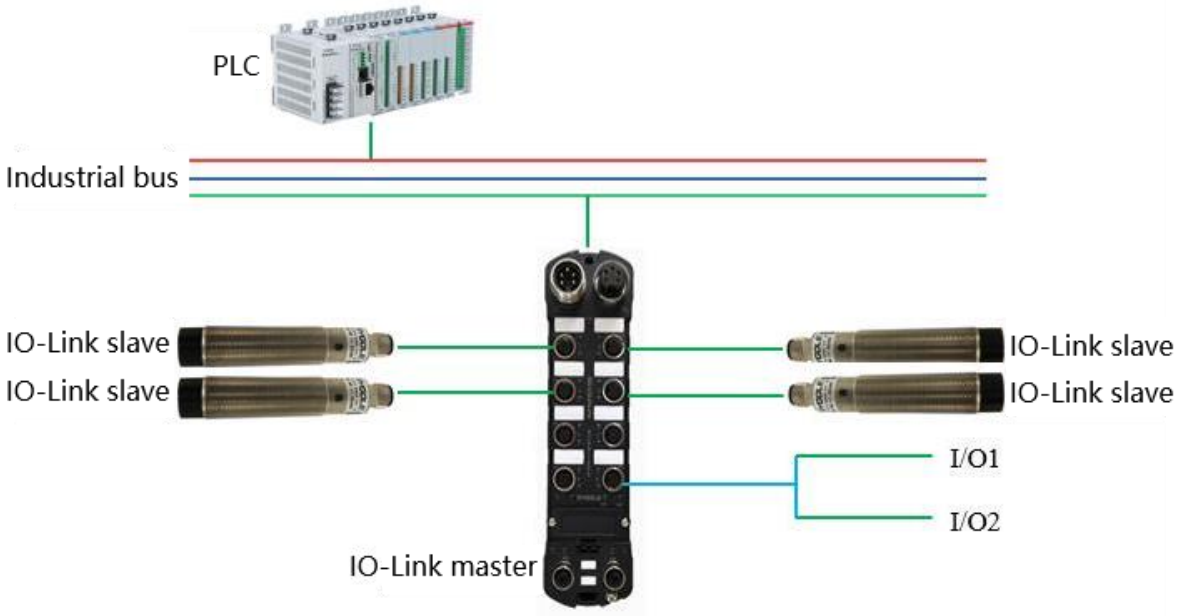


## 1.2 Introduction to the functions

SG-HR-I1-IOL RFID reader is an integrated high-frequency RFID read-write device. Its working frequency is 13.56 MHz, complies with ISO-15693 standard, and supports the IO-Link slave communication protocol. The enclosure is made of high-strength nickel plated brass. The RFID reader has the advantages of reliable identification and convenient installation in a narrow position.

**Tag operations**

SG-HR-I1-IOL supports all mandatory functions and some optional functions defined by ISO-15693 protocol, and can operate ISO-15693 protocol electronic tags.

**Command system**

The SG-HR-I1-IOL RFID reader can interact data with upper level equipment through the command system. Such as reading a UID, reading data by bytes, writing data by bytes, obtaining tag storage information, etc.

**Performance features:**

- High protection level (IP67 level).
- Electromagnetic anti-interference design.
- Efficient data collection capability, can effectively improve the accuracy of MES system data acquisition.

## 1.3 Overview of the control command

All control commands are executed at once. After the RFID reader receives the control command, the reader will return a message to confirm the execution status of the command, regardless of the execution result. Control commands and return messages are shown in the following table:

**Table 1. Overview of control commands and functions**

| Command | Function |
|---|---|
| **Get Inventory** | Read the UID of the tag within the antenna field range |
| **Read data by bytes** | Read tag memory by byte, requiring the starting address and number of bytes as parameters |
| **Write data by bytes** | Write tag memory by byte, requiring the starting address and number of bytes as parameters |
| **Get storage features** | Read the parameters of the tags, such as the size and number of the storage blocks |
| **Get the device serial number** | Read the chip ID within the RFID reader as the unique serial number of it |

**Table 2. Overview of the return messages and causation**

| Return message | Causation |
|---|---|
| **Executed successfully** | The command were executed successfully |
| **Executed failed** | The command were executed failed |
| **No tag** | No readable tag near the RFID reader antenna |
| **Check error** | The command data packet has a code error during the transmission process |
| **Parameter error** | The parameters bound to the command are incorrect |
| **Received timeout** | The data length received by the RFID reader is less than the value of the Data Length field in the command frame, and than RFID reader's waiting time exceeds the time out set. |

For a detailed description of packet structure and function, refer to the *High Frequency Reader Development Manual*.

# 2. Hardware instructions

## 2.1 Introduction of the interface

The SG-HR-I1-IOL high-frequency RFID reader has an external interface that provides both power and communication. There is an indicator, namely the power/tag indicator. The following text provides a detailed definition and specification of them.

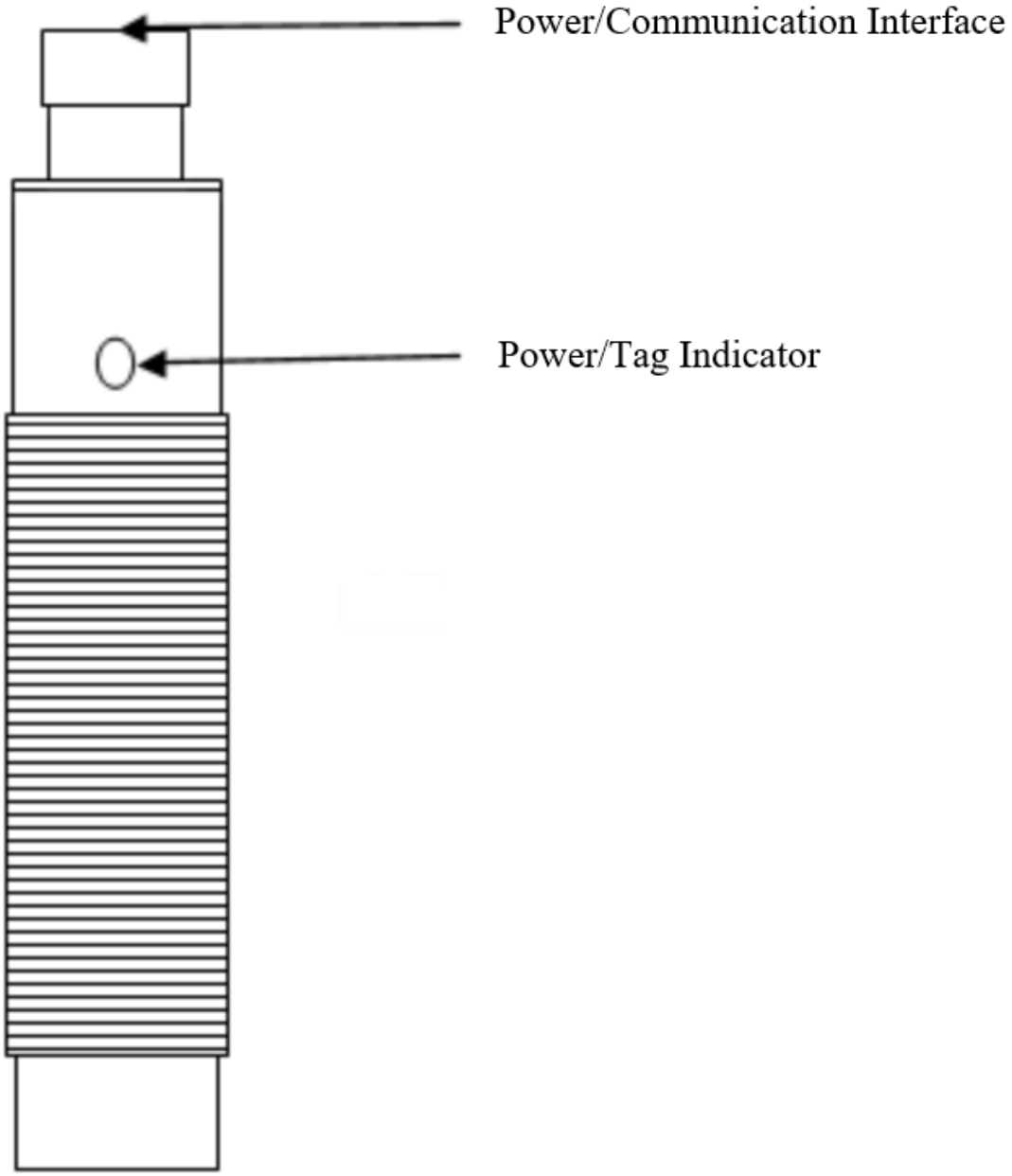


## 2.2 Communication interface

SG-HR-I1-IOL supports IO-Link slave communication protocol, and the specific definition of each interface is as follows:

**Table 3. Definition of IO-Link interface (M12 A-Code 5pin Male) pins**

| No. | Definition | Illustration |
|---|---|---|
| **1** | 24V | 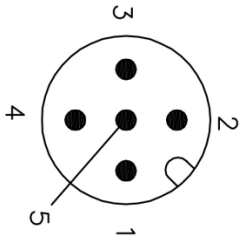 |
| **2** | reserve | |
| **3** | 0V | |
| **4** | C/Q | |
| **5** | PE | |

## 2.3 Indicator status

SG-HR-I1-IOL has two LED indicators, defined as:

**Table 4. Description of LED indicators**

| Name | Description |
|---|---|
| Power/Tag indicator | **OFF:** not power on<br>**Solid Green:** the power supply is normal<br>**Solid Blue:** there is a tag in the read area |

# 3. Enclosure parameters

## 3.1 Physical parameters

**Table 5. Physical parameters of the RFID reader enclosure**

| Name | Parameter |
|---|---|
| **Dimension** | Φ18*92mm |
| **Weight** | 45g (±5g) |
| **Material** | Nickel plated brass + ABS |
| **Color** | Silver and Black |
| **Thread** | 1.0 mm |

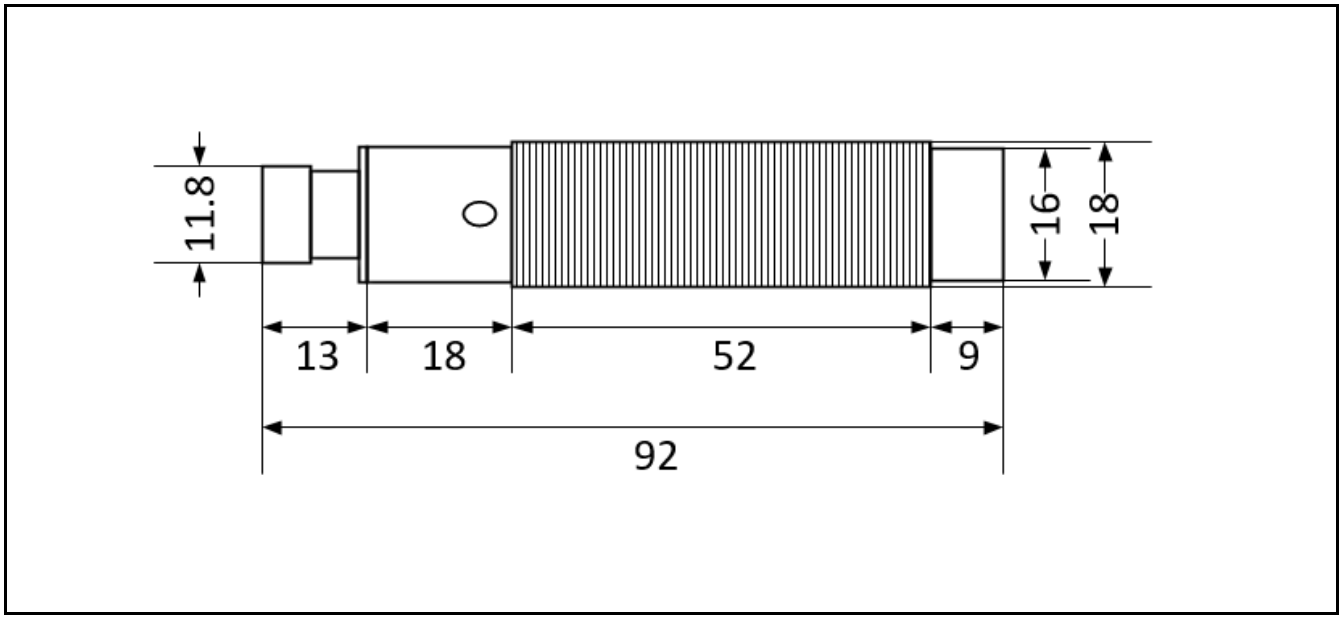


*(Unit in millimeter)*

# 4. Electrical parameters

## 4.1 Power supply

**Table 6. Electrical parameters of the RFID reader power supply**

| | |
|---|---|
| **Supply voltage** | **24V DC ±10%** |
| **Average current** | Less than 0.07A@24VDC |

# 5. Performance parameters

## 5.1 Environment requirements

**Table 8. The RFID Reader working environment requirements**

| | |
|---|---|
| **Operating Temperature** | -25℃~+70℃ |
| **Storage Temperature** | -25℃~ +85℃ |
| **Relative Humidity** | 5% ~ 95% RH (no condensation) |

## 5.2 COM interface

**Table 9. The RFID reader communication parameters**

| | |
|---|---|
| **COM interface** | **IO-Link 1.1** |
| **COM bit rate** | COM3(230.4 kbit/s) |
| **Minimum communication cycle** | 5ms |
| **Maximum communication distance** | 20 Meters |

## 5.3 Air interface

**Table 10. The air interface protocol**

| | |
|---|---|
| **Air interface protocol** | **ISO-15693** |

## 5.4 Service frequency

**Table 11. Radio frequency of the RFID reader**

| | |
|---|---|
| **Radio frequency** | **13.56 MHz** |

## 5.5 Wireless Read-write Distance

**Table 12. Wireless Read-write Distance**

| | |
|---|---|
| **Wireless Read-write Distance** | **0~30 mm(It is related to the type of carrier type)** |

## 5.6 Certificates and other information

**Table 13. Ingress protection, certificates and test standard**

| | |
|---|---|
| **Ingress protection** | IP67 |
| **Certificates** | CE, ROHS2.0 |
| **Drop test standard** | GB/T 2423.7-2018 (In the packaged state, 3m fall) |
| **Anti vibration test standard** | GB/T 2423.10-2019/IEC 60068 -2 -6:2007 |
| **Surge protection test standard** | GB/T 17626.5-2019，2KV |

# 6.Installation method

## 6.1 Fixation

The product has M18 * 1.0 threads, please use two nuts to clamp it onto the bracket.If the grounding of the on-site environment is not standard (grounding resistance greater than 4 ohms is considered non-standard), plastic brackets should be used to ensure stable product operation.

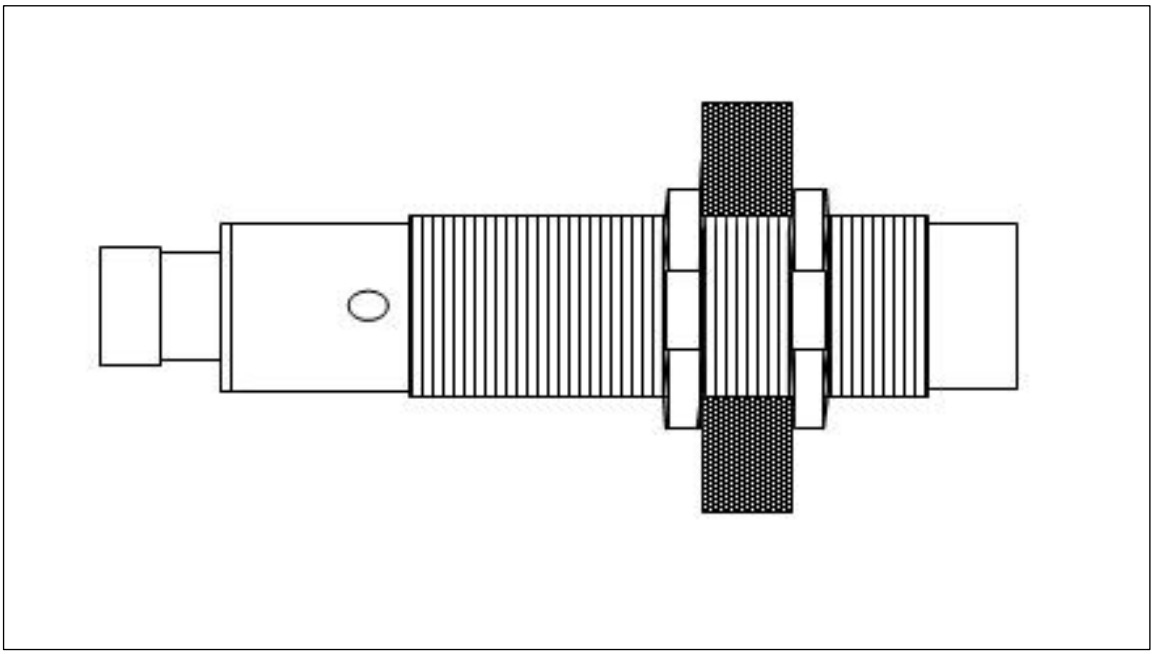

## 6.2 Installation spacing

When there are multiple RFID readers to be installed, the distance between the readers needs to be more than 60 mm.

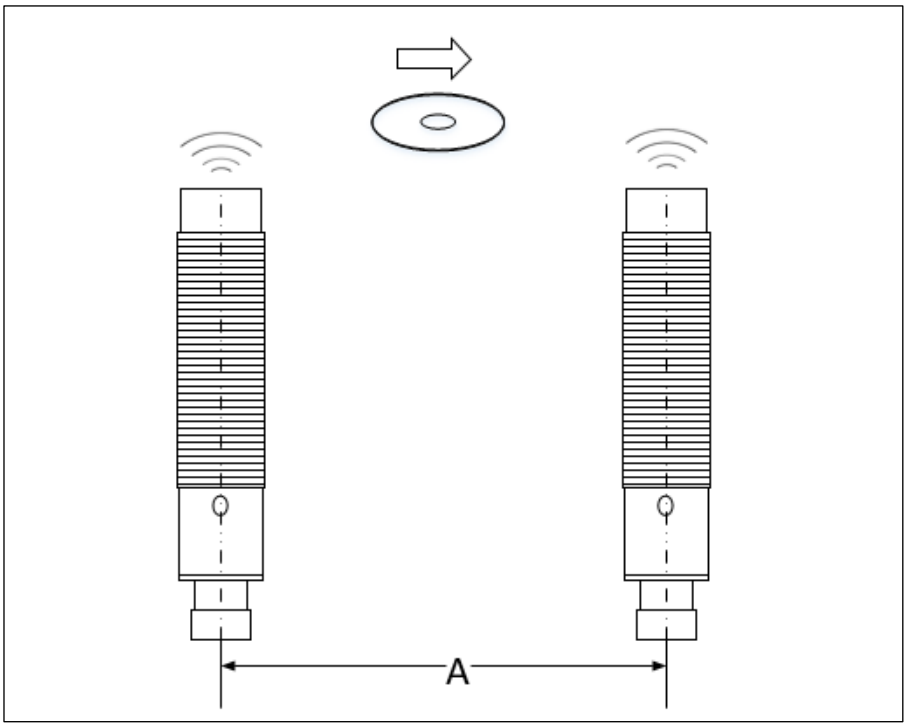

## 6.3 Tag installation

When installing tags, please ensure the induction plane of the RFID reader parallel to the plane on the front of the tag.

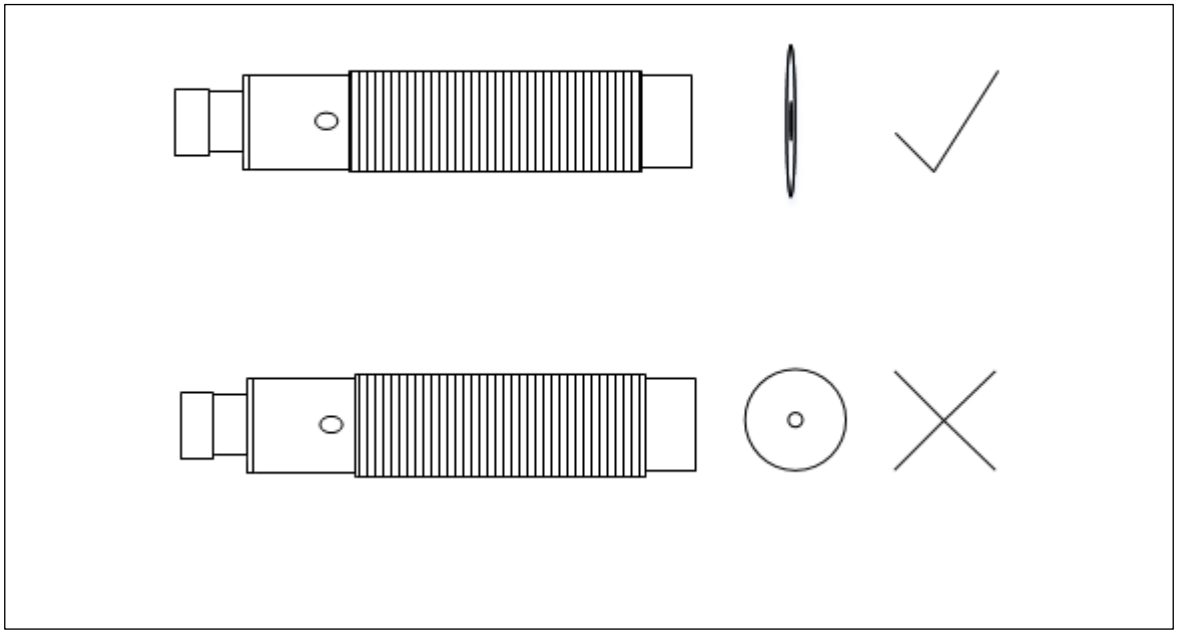

# 7. Safety Information

This device complies with part 15 of the FCC Rules. Operation is subject to the following two conditions: (1) this device may not cause harmful interference, and (2) this device must accept any interference received, including interference that may cause undesired operation.

Any changes or modifications not expressly approved by the party responsible for compliance could void the user's authority to operate the equipment.

NOTE: This equipment has been tested and found to comply with the limits for a Class B digital device, pursuant to Part 15 of the FCC Rules. These limits are designed to provide reasonable protection against harmful interference in a residential installation. This equipment generates, uses and can radiate radio frequency energy and, if not installed and used in accordance with the instructions, may cause harmful interference to radio communications. However, there is no guarantee that interference will not occur in a particular installation.

If this equipment does cause harmful interference to radio or television reception, which can be determined by turning the equipment off and on, the user is encouraged to try to correct the interference by one or more of the following measures:

-- Reorient or relocate the receiving antenna.

-- Increase the separation between the equipment and receiver.

-- Connect the equipment into an outlet on a circuit different from that to which the receiver is connected.

-- Consult the dealer or an experienced radio/TV technician for help.

To maintain compliance with FCC’s RF Exposure guidelines, This equipment should be installed and operated with minimum 20cm distance between the radiator and your body: Use only the supplied antenna.