# 产品规格承认书

# SPECIFICATIONS

客户:

CUSTOMER: _____

产品名称:

DESCRIPTION: Ceramic Antenna

客户型号:

CUSTOMER PART No: _____

产品型号:

OUR MODEL NO: **3216MA01**

日期:

DATE: 2019/07/23

确认签字,盖章后请返回承认书一份

PLEASERETRUV TO US ONE COPY OF “SPECIFICATION FOR APPROVAL”

WITY YOUR APPROVED SIGNATURES

| | | | | | |
|---|---|---|---|---|---|
| | | | | | |
| 核准 | 高洋 | 审核 | 江表强 | 制作 | 柯佳烽 |

| | |
|---|---|
| 客户承认签印 | |
| 日期 | |

| | | | |
|---|---|---|---|
| UNLESS OTHER SPECIFIED TOLERANCES ON:<br>X=± X.X=± X.XX=<br>ANGLES =± HOLEDIA =± | | | |
| SCALE：N/A | UNIT：mm | | |
| DRAWN BY : Sera | CHECKED BY: XD | | |
| DESIGNED BY: Sera | APPROVED BY: XD | | |
| TITLE：CHIP2450-21 Specification | DOCUMENT NO. | 3216 | SPEC REV. P1 |

# 3216MA01 Specification

Operating Temp. : -40℃~+85℃

## 1. FEATURES:

- Light weight, compact
- Wide bandwidth, low cost
- Built-in antenna with high gain

## 2. APPLICATIONS:

- Bluetooth, Wireless LAN, Mobile TV
- Home RF system, etc

## 3. PRODUCT IDENTIFICATION

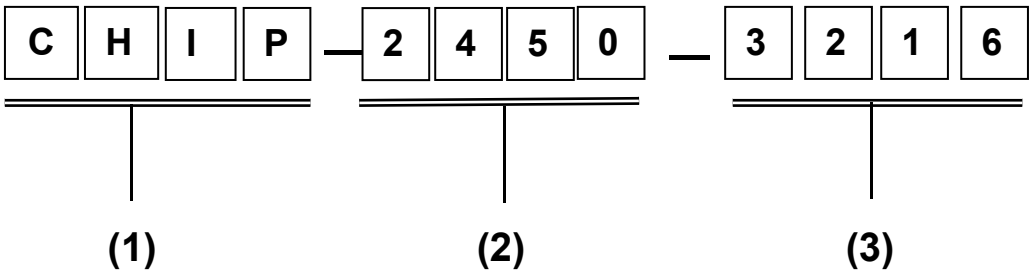


(1) Product type: Multilayer chip Antenna
(2) Center Frequency: 2450MHz
(3) External Dimensions (L×W) (mm): 3.2*1.6

## 4. SHAPE AND DIMENSIONS:

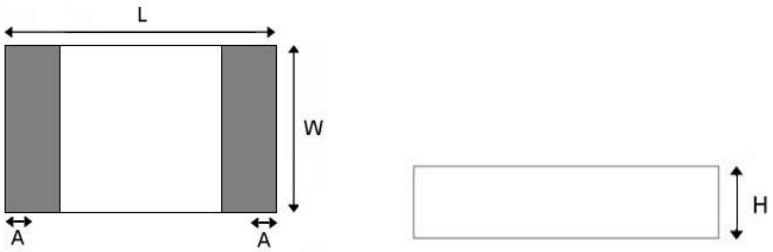


| L | W | H | A |
|---|---|---|---|
| 3.2±0.3 | 1.6±0.3 | 0.52±0.2 | 0.4±0.25 |

| | | | | |
|---|---|---|---|---|
| UNLESS OTHER SPECIFIED TOLERANCES ON:<br>X=± X.X=± X.XX=<br>ANGLES =± HOLEDIA =± | | | | |
| SCALE：N/A | UNIT：mm | | | |
| DRAWN BY : Sera | CHECKED BY: XD | | | |
| DESIGNED BY: Sera | APPROVED BY: XD | | | |
| TITLE：CHIP2450-21 Specification | | DOCUMENT NO. | 3216 | SPEC REV. P1 |

测试板参考尺寸：

单位：mm

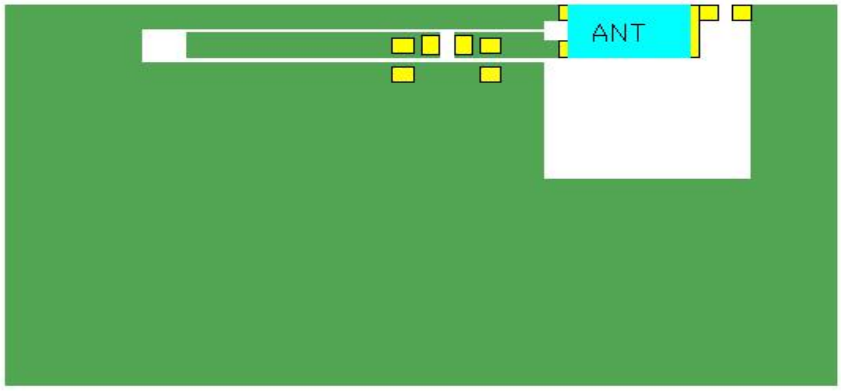


天线
PAD
底层铺铜
顶层铺铜

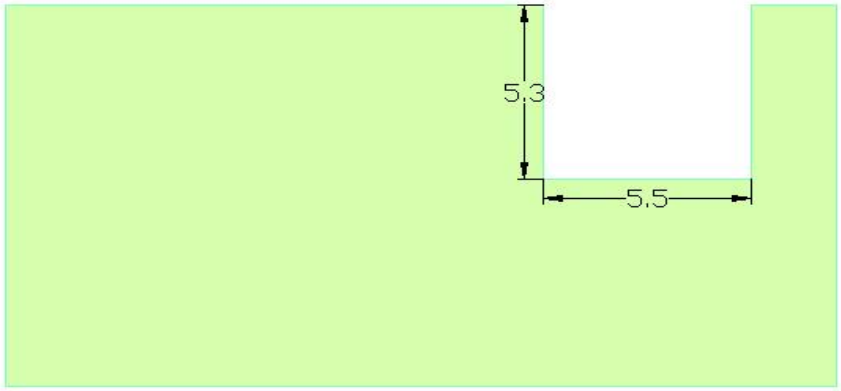


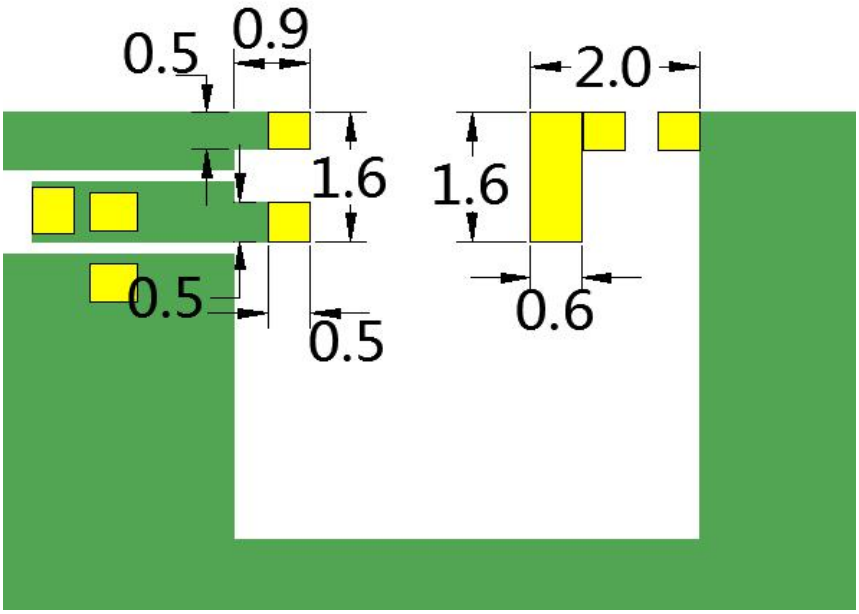


| | | | |
|---|---|---|---|
| UNLESS OTHER SPECIFIED TOLERANCES ON:<br>X=± X.X=± X.XX=<br>ANGLES =± HOLEDIA =± | | | |
| SCALE：N/A | UNIT：mm | | |
| DRAWN BY : Sera | CHECKED BY: XD | | |
| DESIGNED BY: Sera | APPROVED BY: XD | | |
| TITLE：CHIP2450-21 Specification | DOCUMENT NO. | 3216 | SPEC REV. P1 |

打孔参考示意图

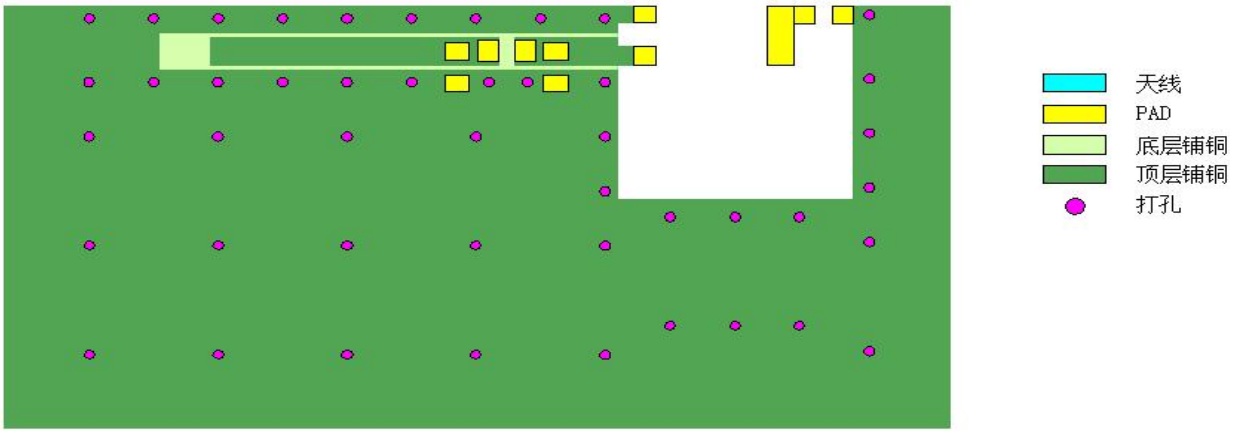


## APPLICATION GUIDE

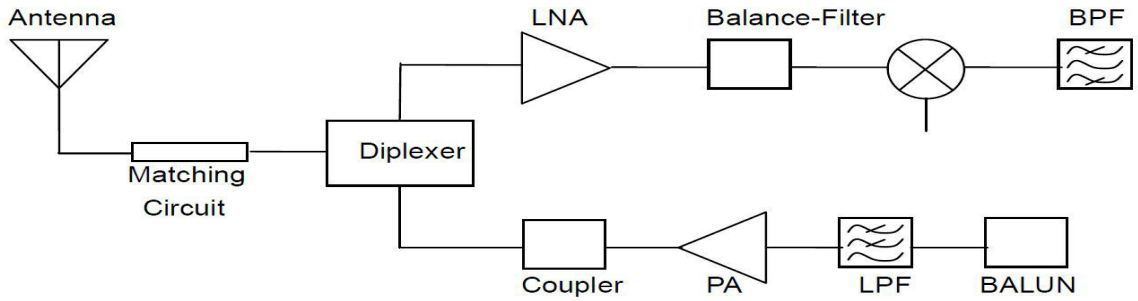


## 5. SPECIFICATIONS:

| 测试项 | 规格 |
|---|---|
| 带宽 | 2400~2483MHz |
| 极化方式 | 线极化 |
| *最大增益 | 2.67dBi |
| *效率 | 72.30% |
| 输入阻抗 | 50Ω |

* Test condition: Test board size 90*40 mm

Matching circuit: Pi matching circuit will be required

## 6. Electrical Characteristics :

回波损耗

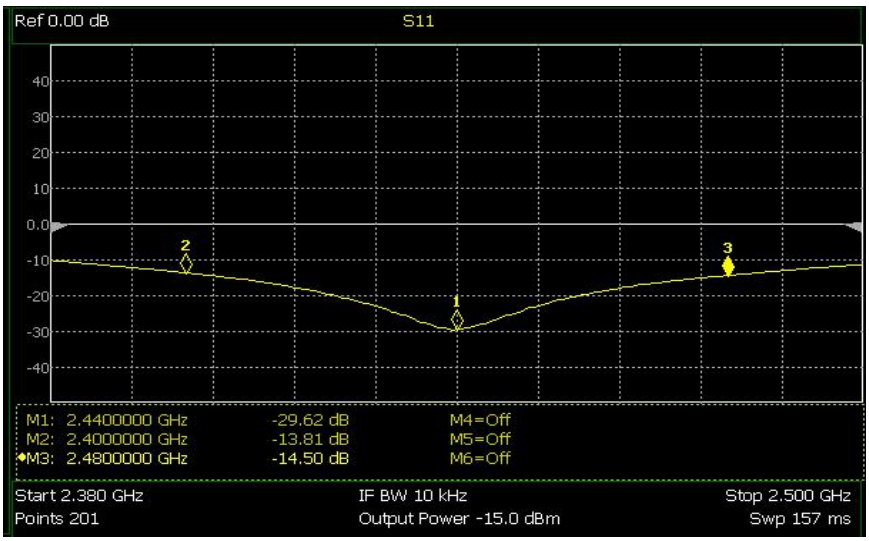


驻波比

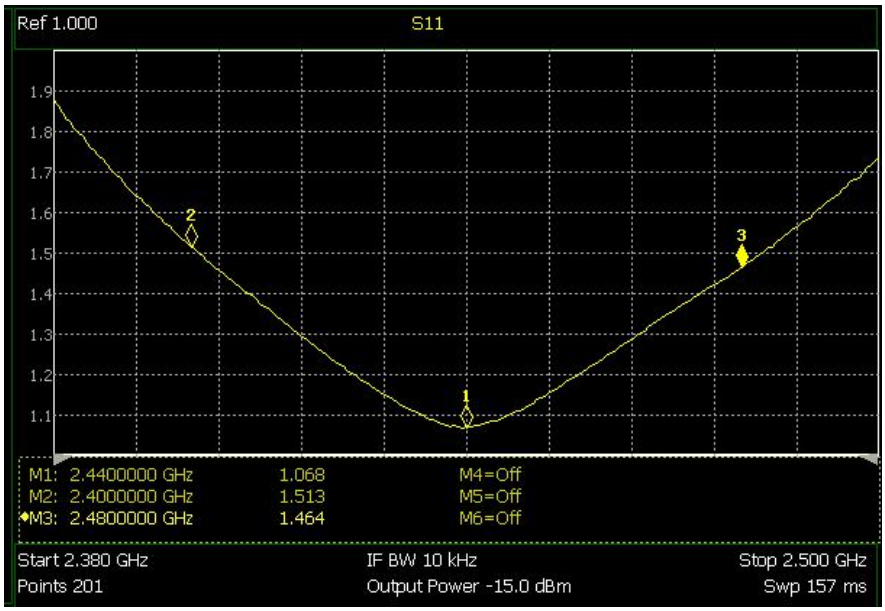


| Mark | Frequency | VSWR |
|---|---|---|
| 1 | 2400 MHz | 1.513 |
| 2 | 2440 MHz | 1.068 |
| 3 | 2480 MHz | 1.464 |

## Radiation Pattern

The Gain pattern is measured in FAR-field chamber. DUT is placed on the table of rotator,a standard horn antenna and Vector Network Analyzer is used to collect data.

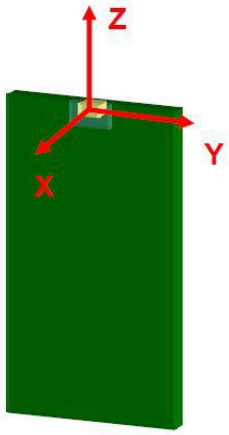


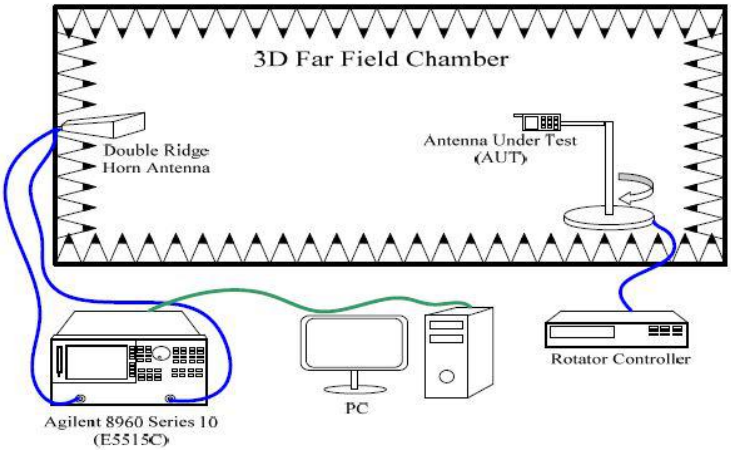


◎ 效率

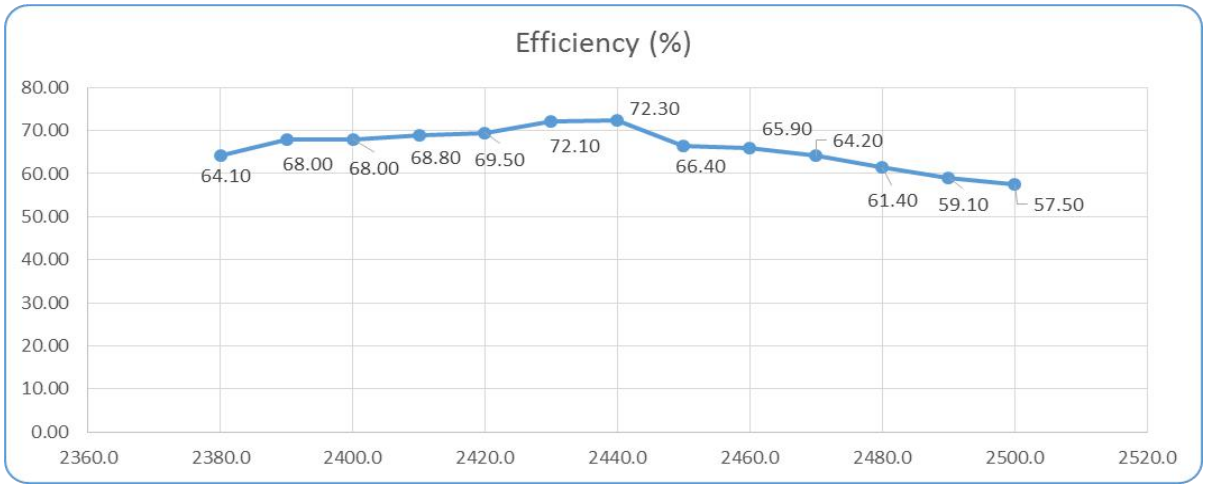


最大增益

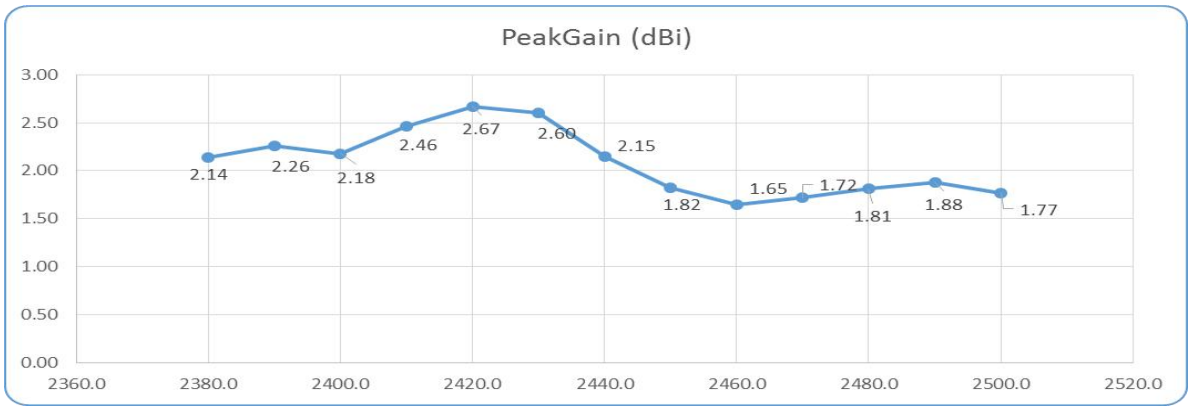


| | | | |
|---|---|---|---|
| UNLESS OTHER SPECIFIED TOLERANCES ON:<br>X=± X.X=± X.XX=<br>ANGLES =± HOLEDIA =± | | | |
| SCALE：N/A | UNIT：mm | | |
| DRAWN BY : Sera | CHECKED BY: XD | | |
| DESIGNED BY: Sera | APPROVED BY: XD | | |
| TITLE：CHIP2450-21 Specification | DOCUMENT NO. | 3216 | SPEC REV. P1 |

◎ **3D Gain Pattern (2400 MHz)**

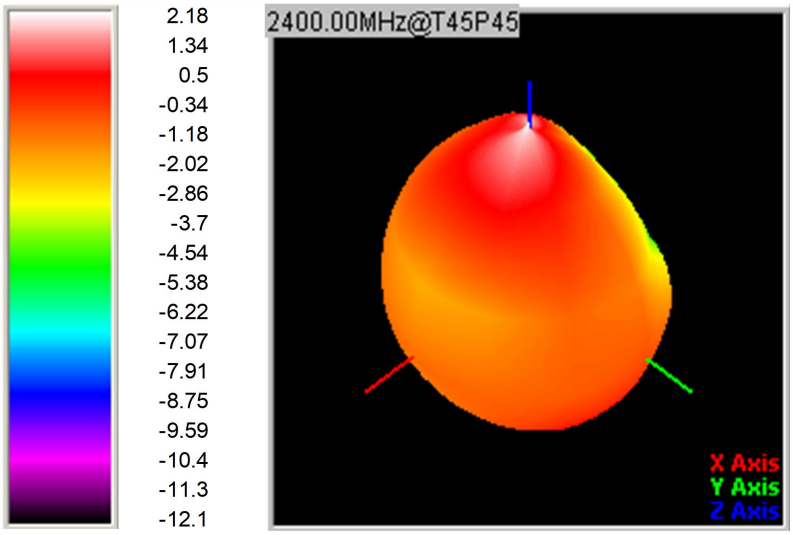


◎ **3D Gain Pattern (2440 MHz)**

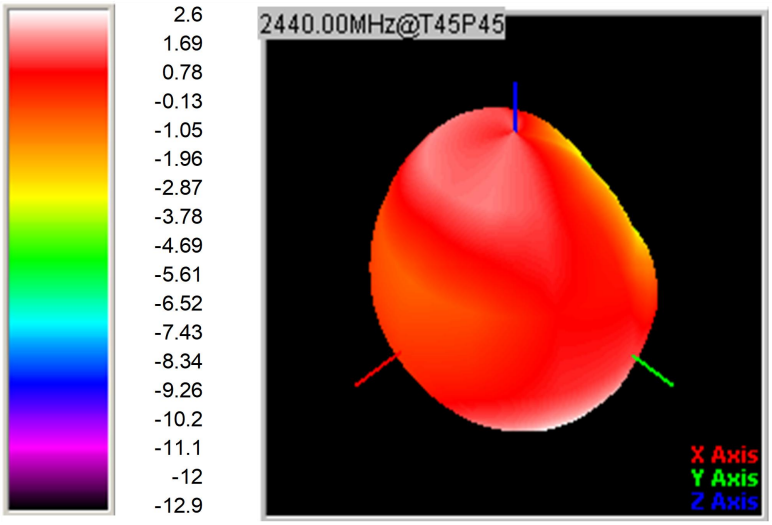


◎ **3D Gain Pattern (2480 MHz)**

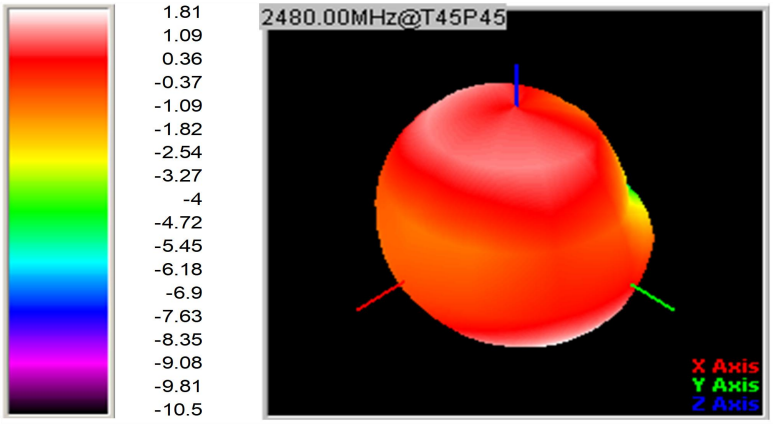


| | | | |
|---|---|---|---|
| UNLESS OTHER SPECIFIED TOLERANCES ON:<br>X=± X.X=± X.XX=<br>ANGLES =± HOLEDIA =± | | | |
| SCALE: N/A | UNIT: mm | | |
| DRAWN BY : Sera | CHECKED BY: XD | | |
| DESIGNED BY: Sera | APPROVED BY: XD | | |
| TITLE: CHIP2450-21 Specification | DOCUMENT NO. | 3216 | SPEC REV. P1 |

## 7. Environmental Characteristics

### (1) Reliability Test

| Item | Condition | Specification |
|---|---|---|
| Thermal shock | 1. 30±3 minutes at -40° C±5° C,<br>2. Convert to +105° C (5 minutes)<br>3. 30±3 minutes at +105° C±5° C,<br>4. Convert to -40° C (5 minutes)<br>5. Total 100 continuous cycles | No apparent damage<br>Fulfill the electrical spec. after test. |
| Humidity resistance | 1. Humidity: 85% R.H.<br>2. Temperature: 85±5° C<br>3. Time: 1000 hours. | No apparent damage<br>Fulfill the electrical spec. after test. |
| High temperature resistance | 1. Temperature: 150° C±5° C<br>2. Time: 1000 hours. | No apparent damage<br>Fulfill the electrical spec. after test. |
| Low temperature resistance | 1. Temperature: -40° C±5° C<br>2. Time: 1000 hours. | No apparent damage<br>Fulfill the electrical spec. after test. |
| Soldering heat resistance | 1. Solder bath temperature : 260±5℃<br>2. Bathing time: 10±1 seconds | No apparent damage |
| Solderability | The dipped surface of the terminal shall be at least 95% covered with solder after dipped in solder bath of 245±5℃ for 3±1 seconds. | No apparent damage |

### (2) Storage Condition

**(a) At warehouse:**

The temperature should be within 0 ~ 30℃ and humidity should be less than 60% RH.

The product should be used within 1 year from the time of delivery.

**(b) On board:**

The temperature should be within -40~85℃ and humidity should be less than 85% RH.

### (3) Operating Temperature Range

Operating temperature range : -40℃ to +105℃.

## 8. Recommended Reflow Soldering

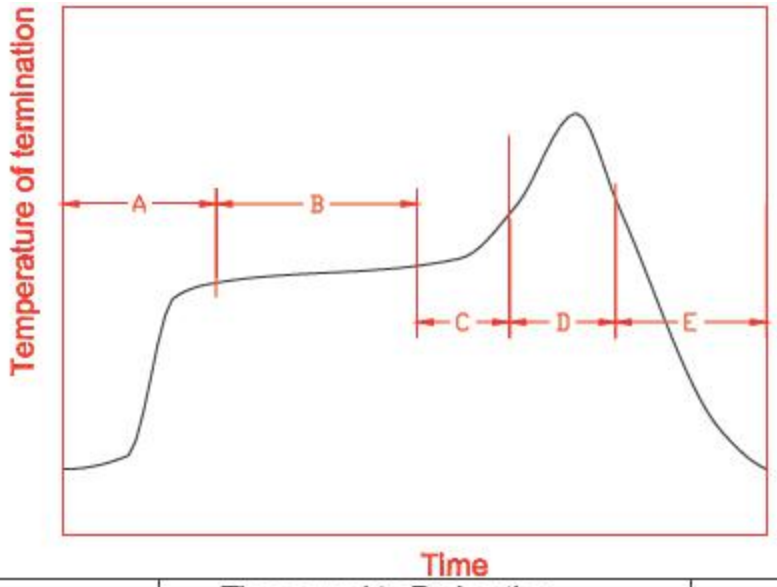


| | | | |
|---|---|---|---|
| A | 1st rising temperature | The normal to Preheating temperature | 30s to 60s |
| B | Preheating | 140℃ to 160℃ | 60s to 120s |
| C | 2nd rising temperature | Preheating to 200℃ | 20s to 40s |
| D | Main heating | if 220℃ | 50s～60s |
| | | if 230℃ | 40s～50s |
| | | if 240℃ | 30s～40s |
| | | if 250℃ | 20s～40s |
| | | if 260℃ | 20s～40s |
| E | Regular cooling | 200℃ to 100℃ | 1℃/s ～ 4℃/s |

*reference: J-STD-020C

### (1) Soldering Gun Procedure

Note the follows, in case of using solder gun for replacement.

(a) The tip temperature must be less than 350° C for the period within 3 seconds by using soldering gun under 30 W.

(b) The soldering gun tip shall not touch this product directly.

### (2) Soldering Volume

Note that excess of soldering volume will easily get crack the body of this product.

## 9. Taping Package and Label Marking: (unit: mm)

(1) Quantity/Reel: 5000pcs/Reel

(2) Carrier tape dimensions

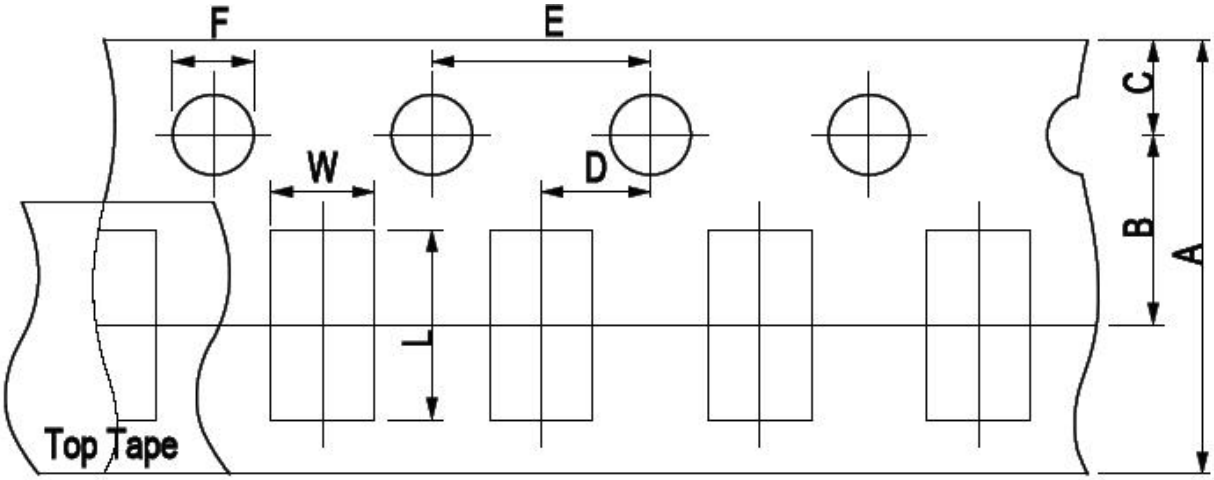


| Type | A | B | C | D | E | F | L | W |
|---|---|---|---|---|---|---|---|---|
| 2450-21 | 8.00±0.3 | 3.50±0.05 | 1.75±0.1 | 2.00±0.05 | 4.00±0.1 | 1.50±0.1 | 2.30±0.1 | 1.55±0.1 |

(3) Taping reel dimensions

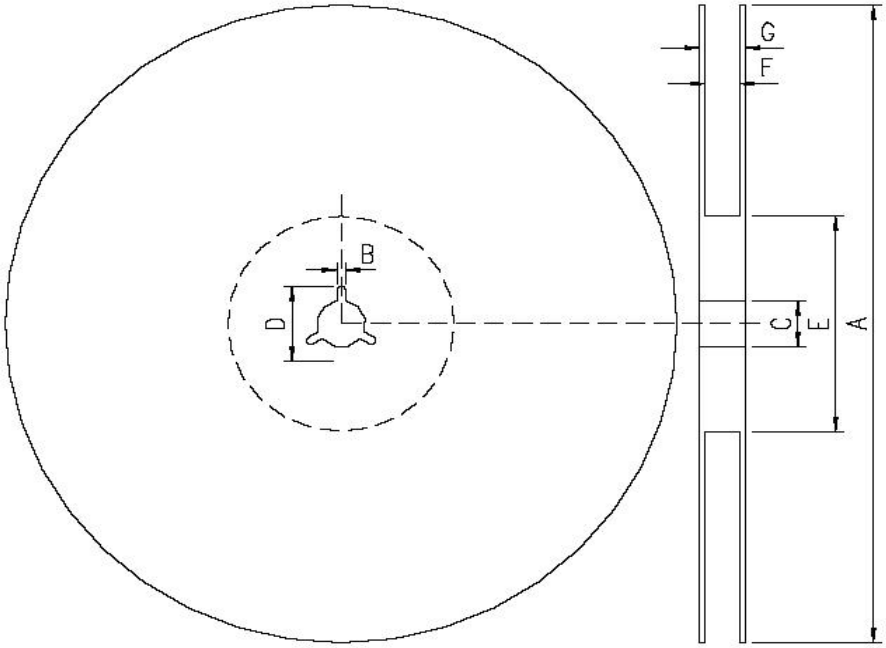


| | |
|---|---|
| A | 178.0±2.0 |
| B | 2.0±0.5 |
| C | 13.0±0.5 |
| D | 21.0±0.8 |
| E | 62.0±1.5 |
| F | 9.0±0.5 |
| G | 13.0±1.0 |

| | | | |
|---|---|---|---|
| UNLESS OTHER SPECIFIED TOLERANCES ON:<br>X=± X.X=± X.XX=<br>ANGLES =± HOLEDIA =± | | | |
| SCALE: N/A | UNIT: mm | | |
| DRAWN BY : Sera | CHECKED BY: XD | | |
| DESIGNED BY: Sera | APPROVED BY: XD | | |
| TITLE: CHIP2450-21 Specification | DOCUMENT NO. | 3216 | SPEC REV. P1 |