BPF1302-1.0-07

13.3” Wide Color Gamut Open Frame Buttondeck

2-Years Warranty | **CE/FCC Certification** | **Industrial Design**

Product Overview

Pixel Works Industry’s 13.3 inches Flat Touch Buttondeck adopts industrial grade component like LCM and Touch chip. With high performance performance, which comply with high level electrical static discharge testing and support touch even surface covered by lot of water or other liquid. To comfortable players, wireless charger are embedded into openframe buttondeck. and to be sure the safety of machines, fusion were set up and cover glass tempered to be a high leve vandal resistance. Hexagon pattern share the unique orignal design to player with more immersion and exciting.

Features & Benefits

- ESD 30KV Air discharge, Class A.
- P-Cap water resistance, powered by PWI
- Wireless charger with UL certificated PCB
- Wide color gamut 90%(CIE 1931)
- Wide view angle with 400cd/m² brightness
- LED life time 50000 hours
- Hexagon pattern of cover glass, unique design

Applications

- Gaming

Pixel Works Industry. All rights reserved

1. Specification 13.3-Inch BPF1302-1.0-07

LCD Panel Parameters	Display Technology	Active matrix TFT LCD, LED backlight
	Aspect Ratio	16:9
	Active Display Area (H × V)	293.4× 165mm (H×V)
	Native Resolution	1920 ×1080@ 60Hz
	Response Time (Typ.)	25ms
	Display Colors	16.7M
	Luminance (Typ.)	400cd/m^2
	Contrast Ratio (Typ.)	800: 1(Typ.)
	Viewing Angle (Typ.)	Horizontal (left/right) CR≥10 89° /89°
		Vertical (up/down) CR≥10 89° /89°
Touch Screen Parameters	Touch Technology	Projected Capacitive (P-Cap)
	Surface Treatment	Physical Tempered
		Optional: Anti-Glare
	Window view area	294.5×166.1mm
	Thickness(Total)	4.5mm
	Light Transmission	≥85%
	Response Time	≤10ms
	Touch Screen Interface	USB-B
	Touch Point	10
Overall Parameters	Case/Bezel Color	Cover glass: Black with Hexagon; Case: Nature
	Mounting Options	Customization
	Outline Dimension (W×H×D)	693.4× 249×42.8mm
	Power Supply	Input voltage DC 12V
	On Screen Display (OSD)	Auto, Up, Power, Down, Menu
	I/O	Video: DP & DVI-I, Touch: USB (Type B), DC-in: ELR-02V, DC-out: Micro-Fit(for Wireless charger power)
	Power Consumption	45W (Max.)
	Operating Altitude	≤3000m
	Temperature	Operating: 0℃ to 50℃, storage: -20℃ to 60℃
	Humidity (non-condensing)	20% to 85%, @40℃, Non-condensing
	Wireless charger	15W, 12V
	Accessories	Cables: DP(1.8m)×1, USB-B(1.8m)×1
	Certification & Compliance	FCC,CE, CISPR 11/EN55011, EN 303 417 V.1.1.1 2017-09, EN 62311, ETSI EN301 489-1, ETSI EN 301 489-3
	Warranty	2 years

Pixel Works Industry. All rights reserved

2. Package information

Carton Box Dimensions (2 units in one carton)	830 X 240 X 370mm
Weight	Net weight: 9.6kg; Gross Weight: 10.9kg

3. Order information

Model	Part Number	Description
BPF1302-1.0-07	1M13002	13.3 inches, 400nits, P-cap, Open frame, DPI&DVI, USB-B, 12V DC, WIreless Charger, Hexagon pattern

4. Optional Computer Modules and Accessories

Optional Computer Modules and Accessories			
Model	Part Number	Description	Optional

5. Document information

Approved by	Reviewed by	Prepared by
Chen		Hu

Item	Version	Date	Description	Changed by
1	V1.0	2023-12-04	First Release	Hu
2	V1.1	2024-01-30	Revise base on sample	Hu
3	V1.2	2024-3-16	Add more details specification as per customer requirement	Hu
4	V1.3	2024-9-26	Add third part test report	Luo
5	V1.4	2024-10-05	Update 2D drawing, Delete the third part test report base on V1.3	Luo

Tel: (86) 0755-23771343
E-mail: info@pixelworksind.com
Website: http://www.pixelworksind.com

Go to www.pixelworksind.com for more products and information, or contact us.

Pixel Works Industry reserves the right to change or update, without notice, any information contained herein; to change, without notice, the design, construction, materials, processing or specifications of any products; and to discontinue or limit production or distribution of any products.

Pixel Works Ind.

Pixel Works Industry. All rights reserved

6. Mechanical Drawing

MARK	AMEND	DATE	CHECKED	APPROVED
1	Modify Printing	2023-12-07	Li	HU
2	Modify structural design	2024-01-20	Li	HU
3	Adjust tolerances in two places, +/-0.7mm	2024-09-26	Li	Wang
4	Adjust tolerances in three places,+/-0.3mm	2024-10-05	Chen	Luo

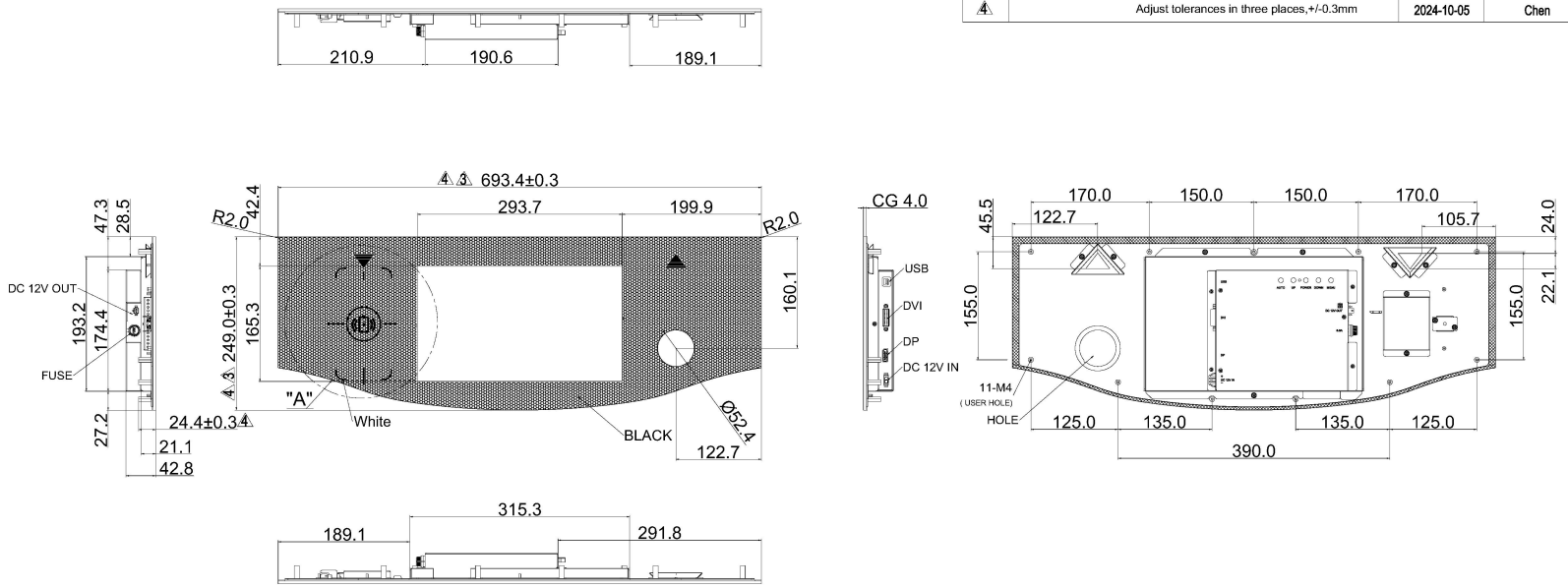

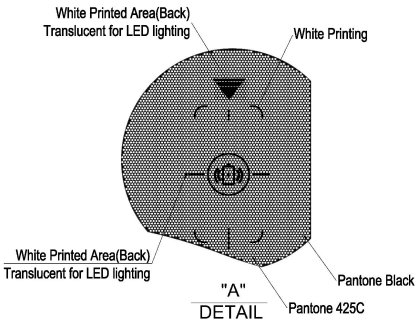

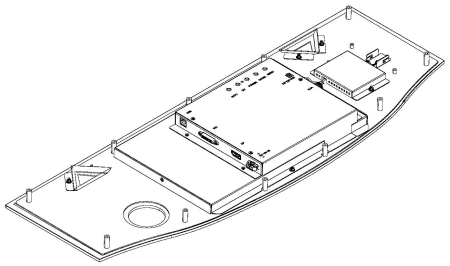

NOTES:
1. All dimensions are in MM, unmarked tolerance defaults to 1mm
2. P-Cap touch with fully tempered glass
3. All materials compliance to RoHS 2.0

Pixel Works Ind.		NAME	13.3" Touchmonitor			
		MODEL NO	BPF1302-1.0-07			DATE
		DWG. NO	1M13002			2024-10-05
DESIGNER	CHECKED	APPROVED	REV.	SCALE	UNIT	VIEW
Wang	Li	HU	1.4	1:6	mm	

Pixel Works Industry. All rights reserved

7. Firmware Version

(1) AD/B FW verion: V1.0

(2) Touch screen FW version: 1.0

8. Video Signal Specification

(1). Input Singal & Interface

Applicability	Input Signal	Type	Description
√	DP	Type	Digtial RGB
		Signal Format	Display port TM 1,2 and 4 lanes
		Connector	Display port
		Maximum resolution	3840 X2160 / 60Hz (594MHz)
N/A	HDMI	Type	Digtial RGB
		Signal Format	TMDS Single Link
		Connector	HDMI 19Pin Standard
		Maximum resolution	3840 X2160 / 60Hz (594MHz)
N/A	VGA	Type	Analog RGB
		Signal Format	
		Connector	D-SUB
		Maximum resolution	1920 X1080 / 60Hz (148.5MHz)
√	DVI-I	Type	Digtial RGB
		Signal Format	TMDS single link
		Connector	DVI 24+5
		Maximum resolution	1920 X1080 / 60Hz (148.5MHz)

(2) Resolution supported

Display Port & DVI-I

Applicability	Resolution @ Refresh rate	H-Frequnce (KHz)	V-Frequnce (Hz)	Pixel Frequnce (MHz)
N/A	640 X 480 @60Hz	31.47	59.94	25.175
N/A	800 X 600 @60Hz	37.88	60.32	40.000
N/A	1024 X 768 @60Hz	48.36	60.00	65.00
√	1360 X 768 @60Hz	47.65	59.93	84.620
√	1366 X 768 @60Hz	47.72	60.02	85.800
N/A	1280 X720 @60Hz	45.000	60.000	74.250
N/A	1280 X 960 @60Hz	60.000	60.000	108.000
N/A	1280 X 1024 @60Hz	63.98	60.02	108.500
√	1600 X 900 @60Hz	60.00	60.00	118.250
N/A	1600 X 1200 @60Hz	75.000	60.000	162.000
N/A	1680 X 1050 @60Hz	64.67	59.88	119.000
√ Prefered	1920 X1080 @60Hz	67.50	60.00	148.500

Pixel Works Industry. All rights reserved

Display Port & HDM Only

Applicability	Resolution @ Refresh rate	H-Frequnce (KHz)	V-Frequnce (Hz)	Pixel Frequnce (MHz)
N/A	2560 X 1440 @60Hz	88.79	59.95	241.50
N/A	3200 X 1800 @60Hz	111.09	59.98	373.25
N/A	3840 X 2160 @30Hz	67.50	30.00	297.00
N/A	3840 X 2160 @60Hz	133.31	59.99	533.25

9. On Screen Display (OSD) Specification

(1) On Screen Display (OSD) Key Function

No.	Function	Description
1	AUTO	Exit/ Return Key
2	UP	Up/Left arrow
3	POWER	Power on/ off
4	DOWN	Down/ Right arrow
5	MENU	Active OSD main menu
	LED	Blue: ON, Red: OFF

(2) OSD Menu Specification

Main Menu	Sub Menu	Setting Range	Defalut value
Color	Brightness	0-100	50
	Contrast	0-100	50
	Backlight	0-100	60
	Color Temp	6500K,7500K, 9300K, User	6500K
	Gamma	off, G1.8, G2.0, G2.2, G2.4	G2.2
Function	Aspect Ratio	Full, 4:3, 16:9	Full
	Over Scan	On, Off	Off
OSD	OSD H Postion	0-100	50
	OSD V Postion	0-100	95
	Transparency	0-100	5
	Language	English, 中文	English
	OSD Rotate	Off, 90,180,270	Off
	Reset		
Audio	Volume	0-100	51
	Mute	Off, On	Off
Advance	Hue	0-100	50
	Saturation	0-100	50
	Sharpness	0-100	50
	PCM	Native, User	Native

Pixel Works Industry. All rights reserved

(3) OSD user menu

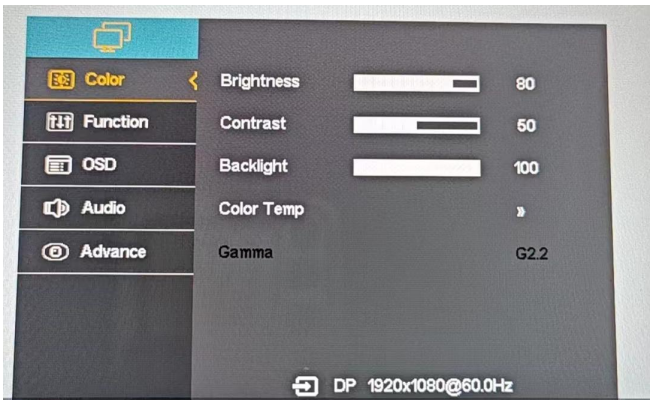

(4) OSD buttons photos

10. LED strip specification (No LEDs)

(1) LEDs general specification

N/A

(2) LEDs electrical specification

N/A

Pixel Works Industry. All rights reserved

(3) LED Direction

N/A

11. External I/O connector pin assignment

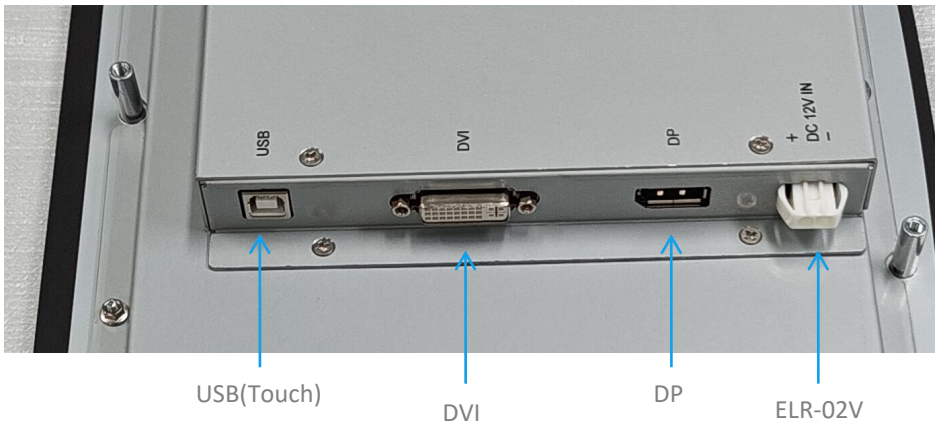

(1) DC Connector ELR-02V

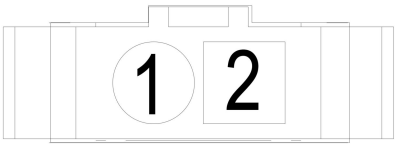

No	Defination	Note
1	+12V	
2	-GND	

Pixel Works Industry. All rights reserved

12. Product Label

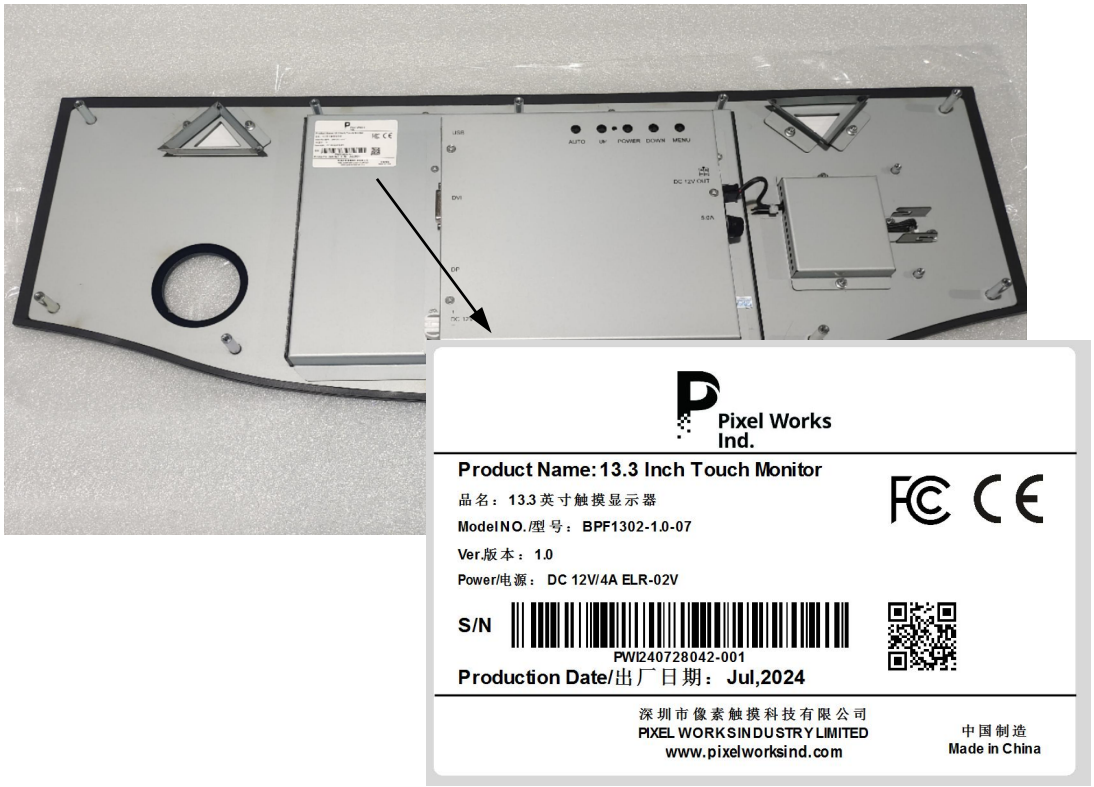

13. Packing

(1) Paper box Label

Pixel Works Ind.

PIXEL WORKS INDUSTRY LIMITED
深圳市像素触摸科技有限公司

Net Weight/净重 Unit/单位：KG	
Gross Weight/毛重 Unit/单位：KG	
Carton Size/外箱尺寸 长 X 宽 X 高（CM）	
Carton No./Total 箱号/箱数	

Product List In Paper Carton
纸箱内产品清单信息

Product No.: 产品型号			
Quantity: 数量		Version: 版本	
Product Certification: 产品认证标志	CE/FCC	Production Date: 生产日期	
Attachment: 附件			
Manufacture: 生产厂商	Pixel Works Ind. 深圳市像素触摸科技有限公司 PIXEL WORKS INDUSTRY LIMITED www.pixelworksind.com 中国制造 Made in China		

Pixel Works Industry. All rights reserved

(2) Packing assymble

2 units per carton

(3) Pallet assymble

A. Pallet Spec

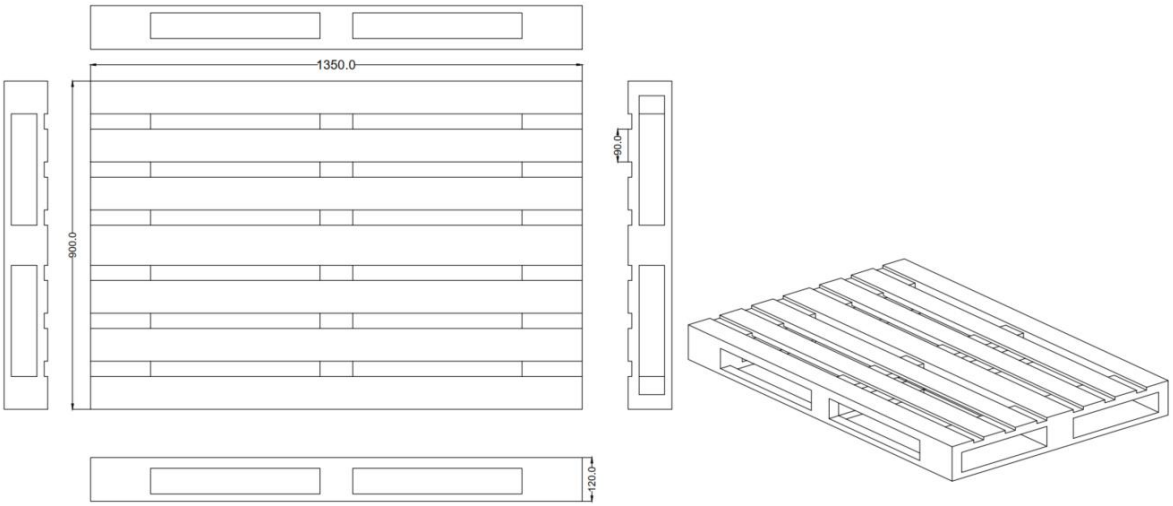

B. Pallet Assymble

C. Pallet and shipment information

No	Item(Ship type)	Specification			Note
		Qty	Dimension(mm)	Weight(kg)	
1	Packing box	2units/box	830 X 240 X 370mm	10.9	
2	Air(Pallet)	20units	1350X900X950	235	Max.2 layer
3	High Cubic(Pallet)	20+20 units	1350X900X1900	470	Max. 2 layer

Pixel Works Industry. All rights reserved

14. Container loading

A. 20 and 40 ft container

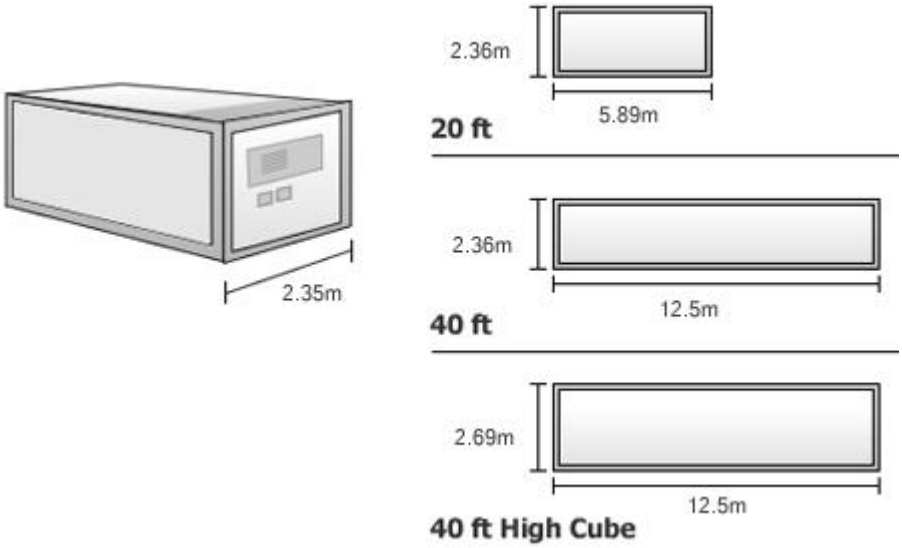

B. Container and shipment infromation

No	Size	Quantity		Note
		Pallet(Layer: WXHXL)	Max. Unit	
1	20ft	4X2	320	Pallet double stack
2	40ft HQ	8X2	640	Pallet double stack

Liability of IP Infrigement

The design on LHA3201-2.0-07 is Aurze Gaming America, INC.'s request. Pixel Works Industry Limited hereby DO NOT warrant that nothing is the usage of LHA3201-2.0-07, nor Aurze Gaming America, INC.'s use of it will infrigge or constitute a misappropriation of the Intellectual Property rights of a third party.

Change for Enhancement

This is the first version send to Aruze Gaming, and have no change right now.

any further change will be list in this area and make an Engineering Change Request to client before execute action.

Pixel Works Industry. All rights reserved

15. General Precautions

Handling

- Do not put this monitor face down
- Do not twist or bend the display
- Use all mounting holes
- Do not scratch or push the panel surface as the polarizer might be damaged
- Wipe off water or other liquids immediately from the panels surface

Storage

- Do not put this monitor face down
- Do not leave the monitor in high temperature, and high humidity for a long time.
- It is highly recommended to store the monitor in controlled temperature from 0°C to 35°C and relative Humidity of less than 70%.
- Do not store the TFT-LCD module in direct sunlight.
- This Product is not designed water-proof. Please avoid from water or moisture place.

DO NOT PUT MONITOR TOP FACE DOWN

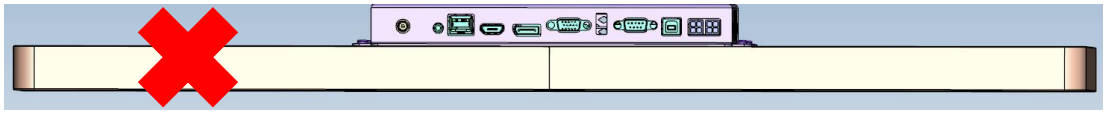

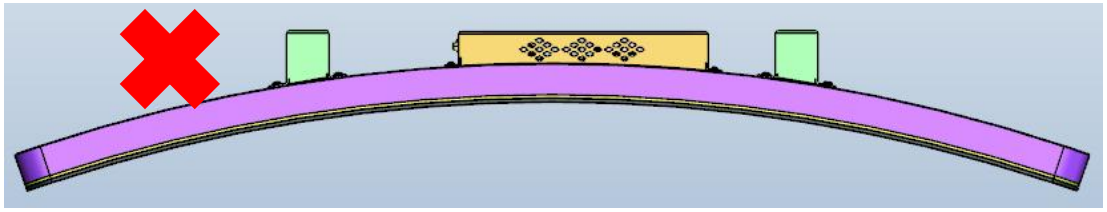

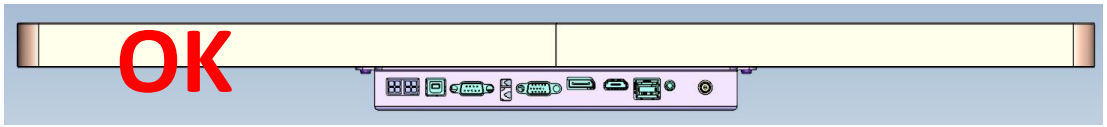

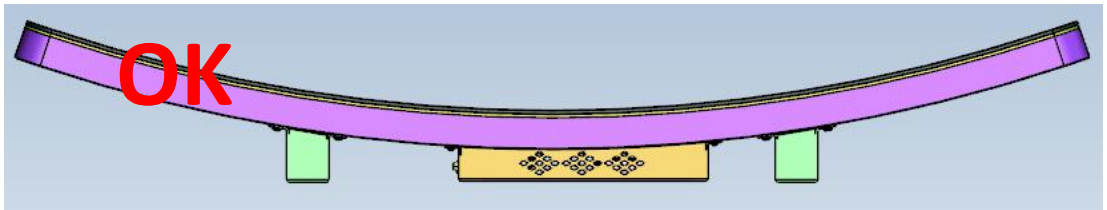

Pixel Works Industry. All rights reserved

FCC Caution:

This device complies with part 15 of the FCC Rules. Operation is subject to the following two conditions: (1) this device may not cause harmful interference, and (2) this device must accept any interference received, including interference that may cause undesired operation.

Any changes or modifications not expressly approved by the party responsible for compliance could void the user's authority to operate the equipment.

NOTE: This equipment has been tested and found to comply with the limits for a Class B digital device, pursuant to Part 15 of the FCC Rules. These limits are designed to provide reasonable protection against harmful interference in a residential installation. This equipment generates, uses and can radiate radio frequency energy and, if not installed and used in accordance with the instructions, may cause harmful interference to radio communications. However, there is no guarantee that interference will not occur in a particular installation.If this equipment does cause harmful interference to radio or television reception,which can be determined by turning the equipment off and on, the user is encouraged to try to correct the interference by one or more of the following measures:

-- Reorient or relocate the receiving antenna.

-- Increase the separation between the equipment and receiver.

-- Connect the equipment into an outlet on a circuit different from that to which the receiver is connected.

-- Consult the dealer or an experienced radio/TV technician for help.

To maintain compliance with FCC ’ s RF Exposure guidelines, This equipment should be installed and operated with minimum distance between 20cm the radiator your body: Use only the supplied antenna.