Instruction Manual

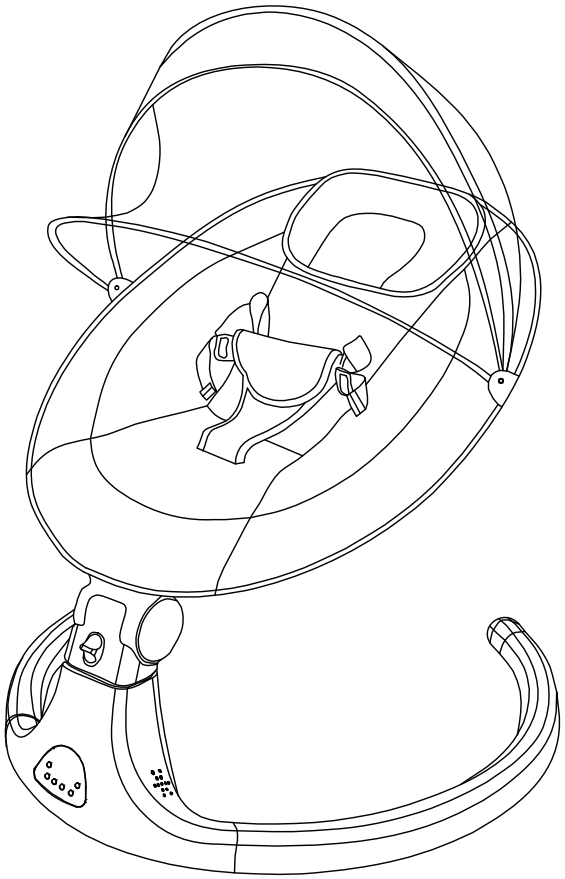

Before Installing and using, please follow the instructions carefully

Keep instructions for future use

Thank you for purchasing the baby swing. This baby swing is a full-touch screen with a built-in Bluetooth function soft electric swing. It moves left and right like a mother always holds the baby in her arms. Made of aluminum alloy, the smart swing is rust resistance and hi-strength quality which is certified by CPSC.

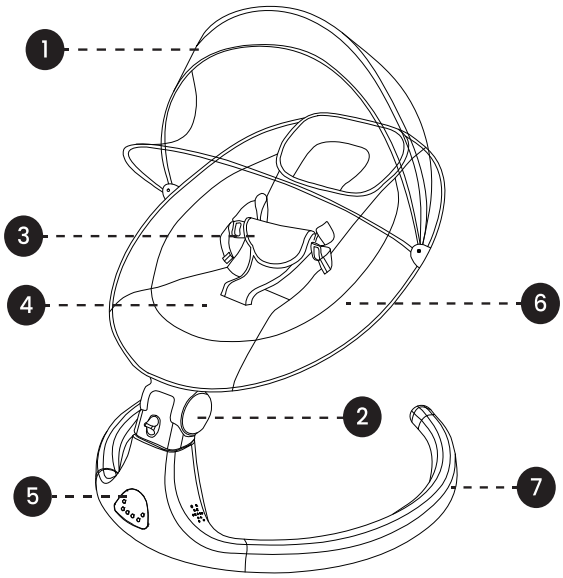

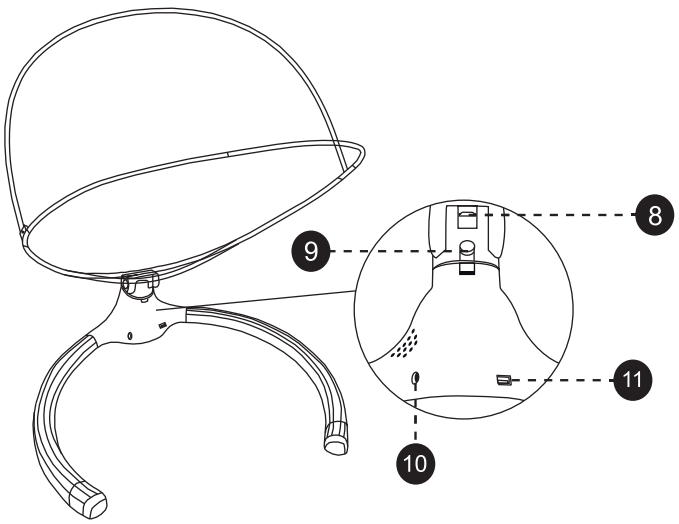

1. Mosquito Net
2. Angle adjustment joint
3. Crotch Harness Cover
4. Seat Pad
5. Touchscreen Control Panel
6. Seat Frame
7. Base Frame
8. Release Button
9. Fold Button
10. Power Port
11. USB Port

Component List

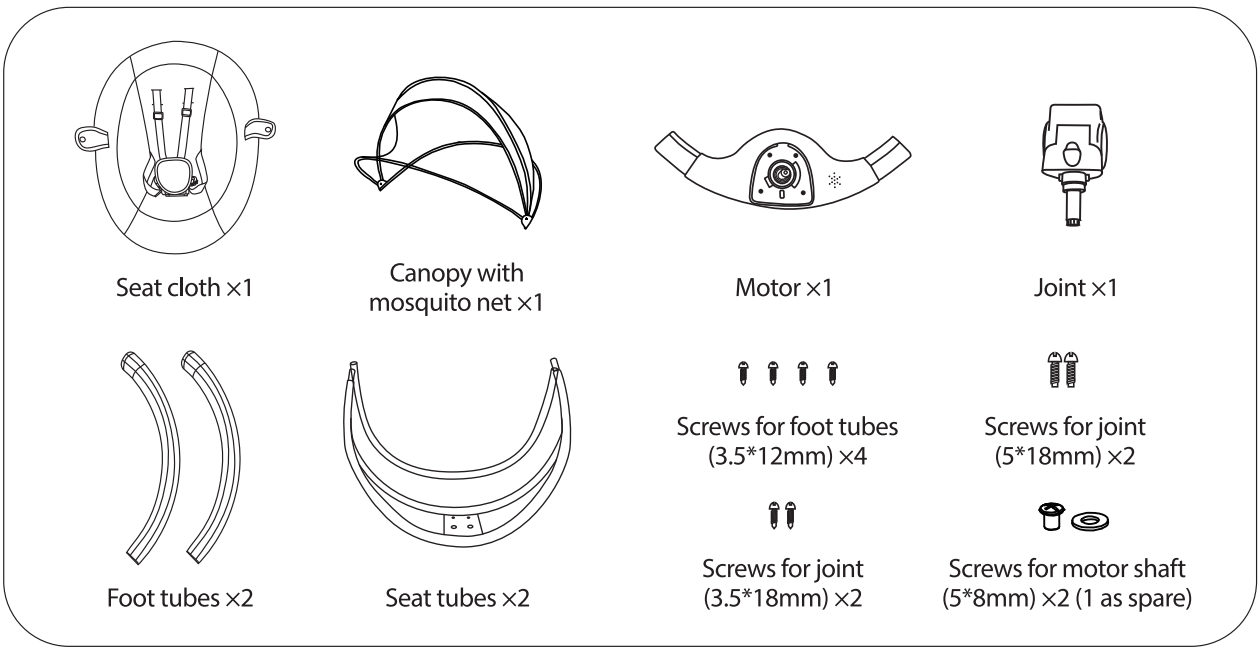

How to assemble the baby rocker

1. Assembly method (This should be done by an adult)

(1) Assemble the base

Please insert the plastics on both sides of the base into two foot tubes, and tighten the 4 screws (3.5*12mm) to 4 holes with the screwdriver

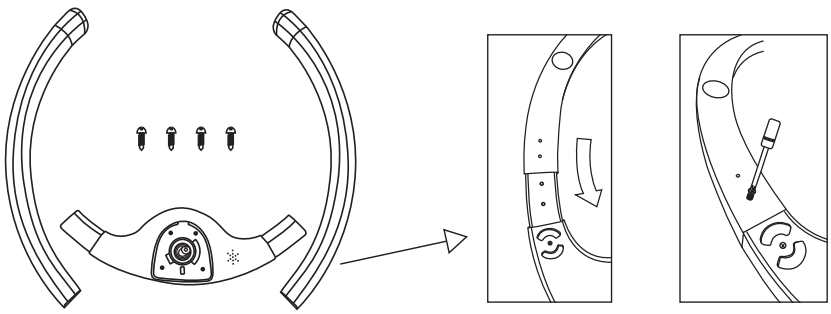

(2) Assemble the seat frame

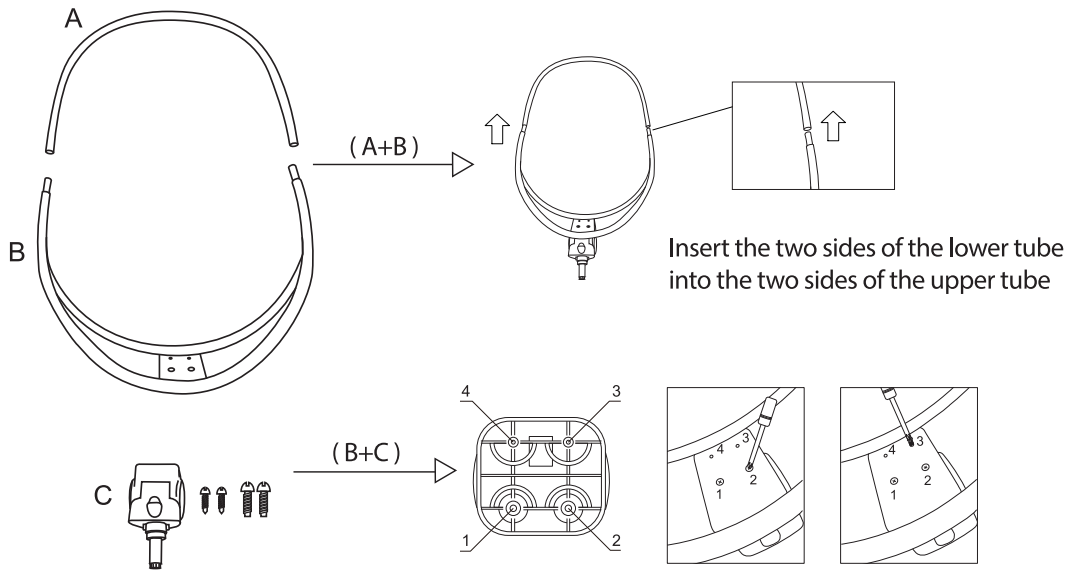

First tighten the two large screws (5*18mm) to the holes of number 1 and 2 with the screwdriver, and then tighten the two small screws (3.5*18mm) to the holes of number 3 and 4

(3) Connect the base and the seat frame

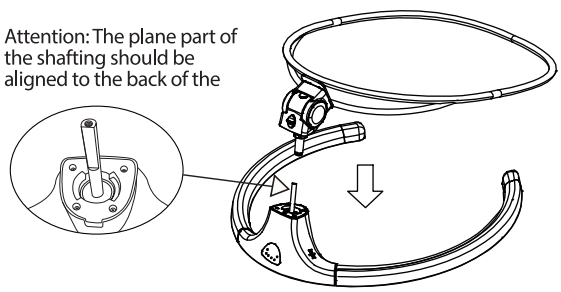

(4) Install the seat cover

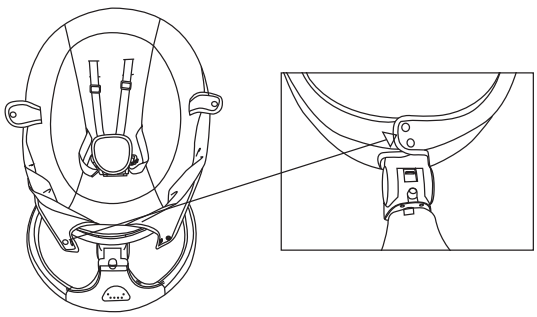

(5) Press the button at the back, then press two buttons of the joint and put it to the lowest position. Put the washer first, and then twist the screw (5*8mm) to parallel with the hole with the screwdriver

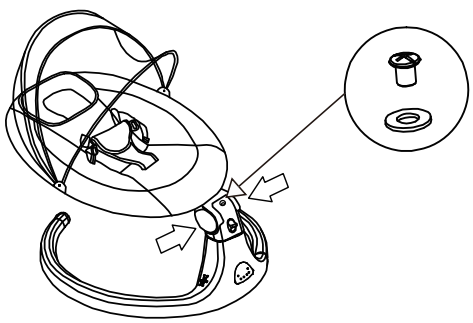

2. Angle adjustment (Adults hold the top of the seat pipe/tube with their hands when adjusting the gear)

(1) Half-lying position angle

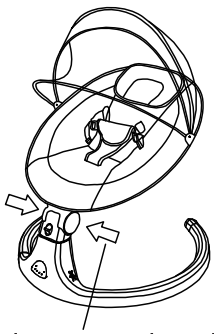

Press the button to adjust the angle

(2) Lying position angle. Warning: The weight of the third gear is 0-9 KGS, and cannot exceed the weight of 9KGS.

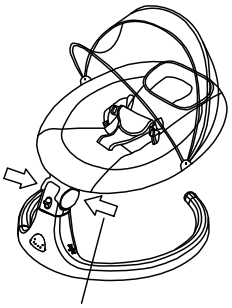

Press the button to adjust the angle

(3) Angle unlock and lock

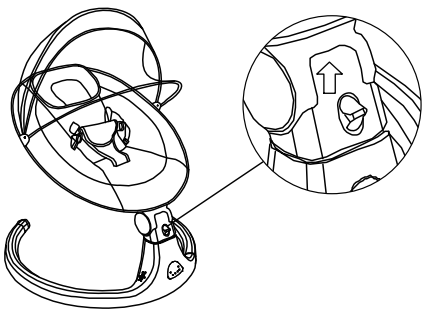

Push upward to unlock (can swing)

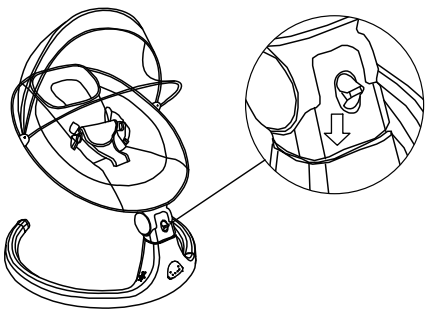

Push down to lock (can not swing)

3. Folding adjustment

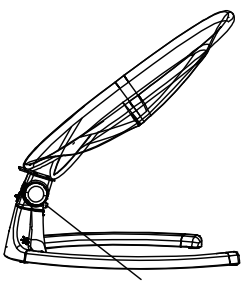

(1) Press the round button, then press the joint button to the lowest position

(2) After folding to the lowest angle, this product cannot be used

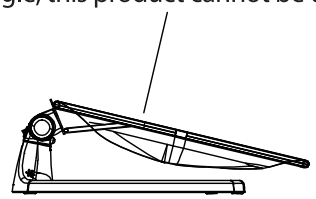

Power Supply

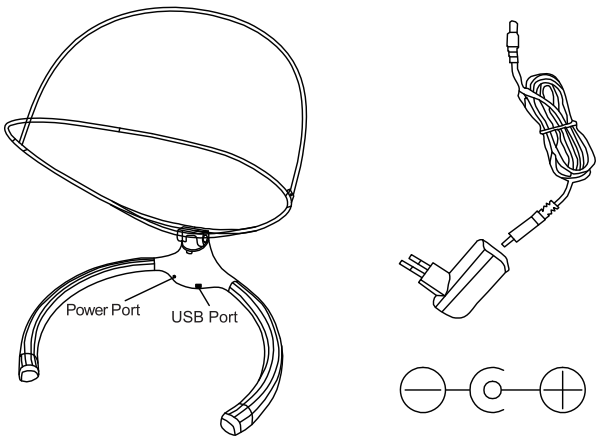

* One: The standard power supply is the 5mm adapter supplied with the product to supply power, the adapter input voltage is AC100-240V, 50/60Hz; the output voltage is DC5V, 1.0A

* Two: The power bank can be used for temporary power supply, but because the voltage is only 5V, there may be insufficient power, so long-term use is not recommended

Remote Control Instructions

Power on/off

Play/pause

VOL+ Volume up

Timer Timer setting

Previous song

VOL- Volume down

Music Built-in music/ bluetooth music

Next song

STOP Stop

1 2 3 4 5 Five swing mode

Panel

Five swing mode

Timer button with three modes

Power on/off

Bluetooth

Music play and pause (short press)
Music switch button (long press for 2 seconds)
Volume control (long press for 3 seconds)

Touch sense swing

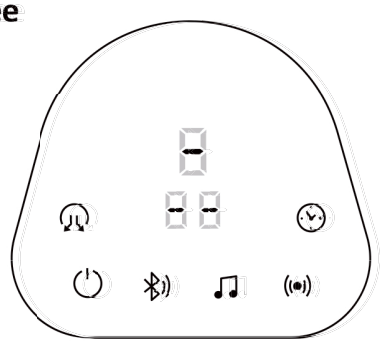

Safety Instructions

⚠WARNING

1. Keep the seat belt on while using
2. Do not leave the child unattended
3. Applicable age: 0-6 months old
4. The maximum weight for this product is 9 KGS
5. DO NOT move or lift the product by the mosquito net
6. DO NOT move or lift the product when the child is in the seat
7. DO NOT hang other items from the the canopy except the supplied toys
8. DO NOT place the product at a high poston (table top, stairs or other high posltion from the ground) as it may fall and cause injury
9. It is dangerous to use this product on an elevated surface
10. DO NOT use the product on soft matter (sofa, bed) to avoid falling and cause suffocation
11. DO NOT use it for babies who can stand up independently to prevent hidden dangers such as being entangled in the seat belt or strangled!
12. This product is not classfied as toy
13. When the music player is connected, please make sure the volume is in a low voice initially
14. DO NOT use if any parts are missng or broken. Never substitute parts
15. Keep the product away from fire

⚠ WARNING

- **INGESTION HAZARD:** This product contains a button cell or coin battery.
- **DEATH** or serious injury can occur if ingested.
- A swallowed button cell or coin battery can cause **Internal Chemical Burns** in as little as **2 hours**.
- **KEEP** new and used batteries **OUT OF REACH Of CHILDREN**.
- **Seek immediate medical attention** if a battery is suspected to be swallowed or inserted inside any part of the body.

⚠ WARNING：

a) Remove and immediately recycle or dispose of used batteries according to local regulations and keep away from children. Do NOT dispose of batteries in household trash or incinerate.
b) Even used batteries may cause severe injury or death.
c) Call a local poison control center for treatment information.
d) The compatible battery type CR2025.
e) The nominal battery voltage is DC 3V.
f) Non-rechargeable batteries are not to be recharged.
g) Do not force discharge, recharge, disassemble, heat above 60°C（140°F）or incinerate. Doing so may result in injury due to venting, leakage or explosion resulting in chemical burns.

⚠ WARNING：

a) Ensure the batteries are installed correctly according to polarity (+ and -).
b) Do not mix old and new batteries, different brands or types of batteries, such as alkaline, carbon-zinc, or rechargeable batteries.
c) Remove and immediately recycle or dispose of batteries from equipment not used for an extended period of time according to local regulations.
d) Always completely secure the battery compartment. If the battery compartment does not close securely, stop using the product, remove the batteries, and keep them away from children.

⚠Warning

(1) No short circuit of power terminals

(2) Keep the adaptor away from child while using

(3) Check the adaptor and accesories regularily and if you find any damage please stop using

Cleaning and Washing

Seat cushion: The seat cushion is removable and is washable. It Is recommended to wash by hand but not machine wash. After soaking in water and adding soft detergent, use clean water to clean it, then wring out the water and place flat out of direct sunlight to dry
Inner filler: fireproof hard resin cotton. Warning! Machine washing, bleaching and tumble drying are prohibited.

⚠WARNING

FALL and **STRANGULATION HAZARDS:** Infants have suffered head injuries falling from swings and have strangled in straps.

- **ALWAYS** use restraints. Adjust to fit snugly.
- **STOP** using product when infant attempts to climb out (approximately 6 months).
- Stay near and watch baby during use. This product is not safe for sleep or unsupervised use. If baby falls asleep, remove baby as soon as possible and place baby on a firm, flat sleep surface such as a crib or bassinet.
- **ALWAYS** place swing on floor. Never use on any elevated surface.
- **NEVER** use on a bed,sofa,cushion,or other soft surface.
- Stay near and watch baby during use. This product is not safe for sleep or unsupervised use. If baby falls asleep, remove baby as soon as possible and place baby on a firm, flat sleep surface such as a crib or bassinet.

⚠ WARNING

- Never leave the child unattended.
- Do not use this product once your child can sit up unaided or weighs more than 9 kg.
- Never use this product on an elevated surface (e.g.a table).
- Always use the restraint system.
- Do not let children play with this product.
- Do not move or lift this product with the baby inside it

25.4mm

25.4mm

- When the product is connected to a music plauer,ensure that the volume of the music player is set.
- This product does not replace a cot or a bed.Should your child need to sleep,then it should be placed in a suitable cot or bed.
- Do not use the product if any components are broken or missing.
- Do not use accessories or replacement parts other than those approved by the manufacturer

FCC ID:CA23050234-E-000

This device complies with Part 15 of the FCC Rules. Operation is subject to the following two conditions:

- this device may not cause harmful interference,and
- this device must accept any interference that may cause undesired poeration.

⚠ WARNING

Fall Hazard: Babies have suffered skull fractures falling while in and from bouncers.

- Use bouncer **ONLY** on floor.
- **ALWAYS** use restraints and adjust to fit snugly.
- **NEVER** lift or carry baby in bouncer.

⚠ WARNING

Suffocation hazard: Babies have suffocated when bouncers tipped over on soft surfaces and/or when bouncers have been used as a sleep product.

- **NEVER** use on a bed, sofa, cushion, or other soft surface.
- Stay near and watch baby during use. This product is not safe for sleep or unsupervised use. If baby falls asleep, remove baby as soon as possible and place baby on a firm, flat sleep surface such as a crib or bassinet.

To prevent **falls** and **suffocation:**

- **ALWAYS** use restraints and adjust to fit snugly.
- **STOP** using bouncer when baby starts trying to sit up or has reached 20 lb, whichever comes first.
- **ALWAYS** place rocker on floor. Never use on any elevated surface.

Safety Belt Instruction

Place the baby into the swing and let his arms across the shoulder straps and legs across both sides of crotch support restraint, insert five-point buckle, then turn the crotch support cover up and stick on Velcro.
When you need to take your baby out of swing, press the center button of five-point buckle to release the strap.

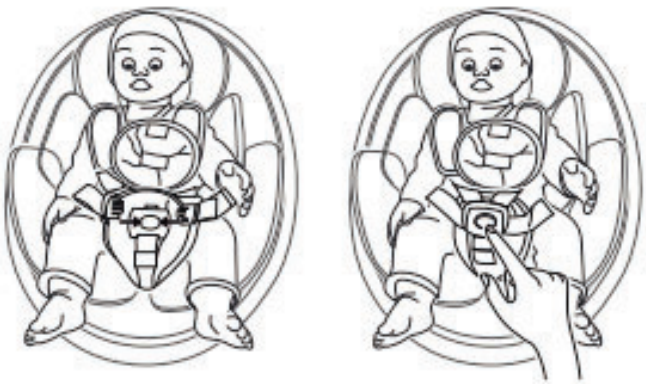

Note: Be sure to use the safety belt correctly when your baby lies on the baby swing and adjust the belt to proper length for the safety of your child.

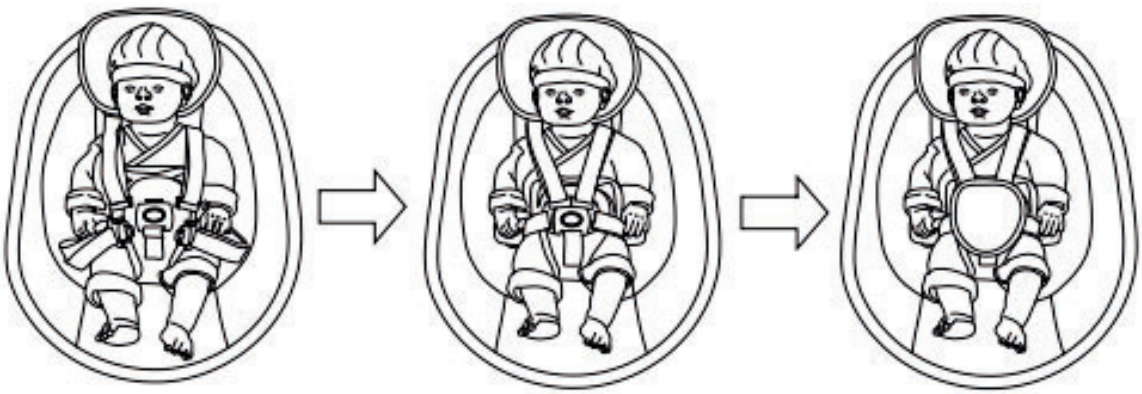

The belt goes through the top hole and then the bottom hole, fasten the belt.
Baby sits into the swing chair, buckle up the seat belts.

FCC Warnning:

This equipment has been tested and found to comply with the limits for a Class B digital device, pursuant to part 15 of the FCC Rules. These limits are designed to provide reasonable protection againstharmful interference in a residential installation. This equipment generates, uses and can radiateradio frequency energy and, if not installed and used in accordance with the instructions, maycause harmful interference to radio communications. However, there is no guarantee thatinterference will not occur in a particular installation. If this equipment does cause harmfulinterference to radio or television reception, which can be determined by turning the equipmentoff and on, the user is encouraged to try to correct the interference by one or more of thefollowing measures:

- Reorient or relocate the receiving antenna.
- Increase the separation between the equipment and receiver.
- Connect the equipment into an outlet on a circuit different from that to which the receiver is connected.
- Consult the dealer or an experienced radio/TV technician for help.

Caution: Any changes or modifications to this device not explicitly approved by manufacturer could void your authority to operate this equipment.

This device complies with part 15 of the FCC Rules. Operation is subject to the following two conditions:

(1)This device may not cause harmful interference, and (2) this device must accept any interference received, including interference that may cause undesired operation.

This equipment complies with FCC radiation exposure limits set forth for an uncontrolled environment. This equipment should be installed and operated with minimum distance 20cm between the radiator and your body.