RAIN

# 3216 Chip antenna

## For Bluetooth / WLAN Applicationsd

**P/N: RANT3216F245M02**

| | Dimension (mm) |
|---|---|
| L | 3.23 ± 0.20 |
| W | 1.66 ± 0.20 |
| T | 1.23 ± 0.20 |

咏成國際科技有限公司 電話: 13530576606
RAIN International Technology Co., Ltd. TEL: 13530576606

lead-free RoHS compliant

## Part Number Information

| RANT | 3216 | F | 245 | M | 02 |
|---|---|---|---|---|---|
| A | B | C | D | E | F |

| | | |
|---|---|---|
| A | Product Series | Antenna |
| B | Dimension L x W | 3.2X1.6mm (+-0.2mm) |
| C | Material | High K material |
| D | Working Frequency | 2.4 ~ 2.5GHz |
| E | Feeding mode | Monopole & Single Feeding |
| F | Antenna type | Type=02 |

## 1. Electrical Specification

| Specification | | |
|---|---|---|
| Part Number | RANT3216F245M02 | |
| Central Frequency | 2450 | MHz |
| Bandwidth | 100 (Min.) | MHz |
| Return Loss | -6.5 (Max) | dB |
| Peak Gain | 3 | dBi |
| Impedance | 50 | Ohm |
| Operating Temperature | -40 ~ +85 | ℃ |
| Maximum Power | 4 | W |
| Resistance to Soldering Heats | 10 ( @ 260℃) | sec. |
| | | |
| Polarization | Linear | |
| Azimuth Beamwidth | Omni-directional | |
| Termination | Cu / Sn (Leadless) | |

Remark : Bandwidth & Peak Gain was measured under evaluation board of next page

咏成國際科技有限公司 電話: 13530576606
RAIN International Technology Co., Ltd. TEL: 13530576606

## 2. Recommended PCB Pattern

**Evaluation Board Dimension**

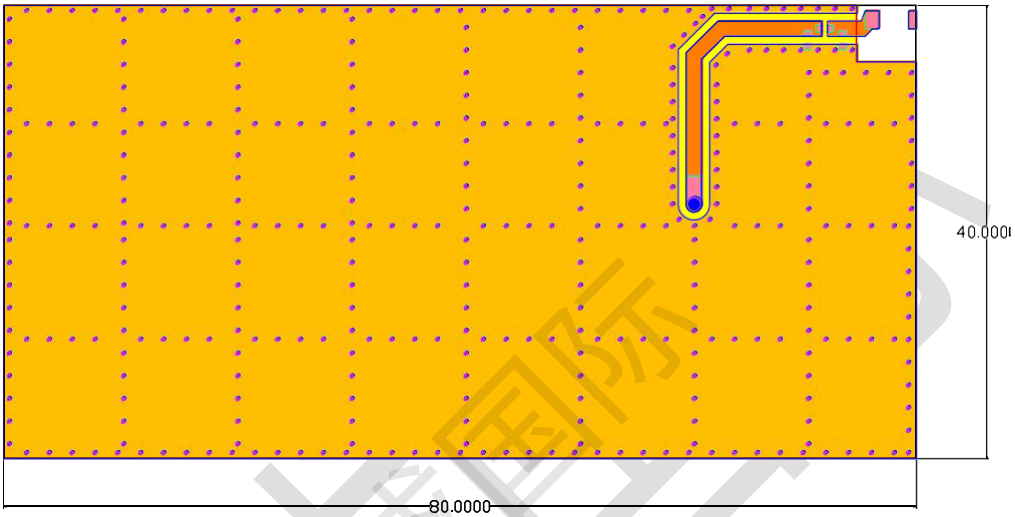


**Unit : mm**

**Suggested Matching Circuit**

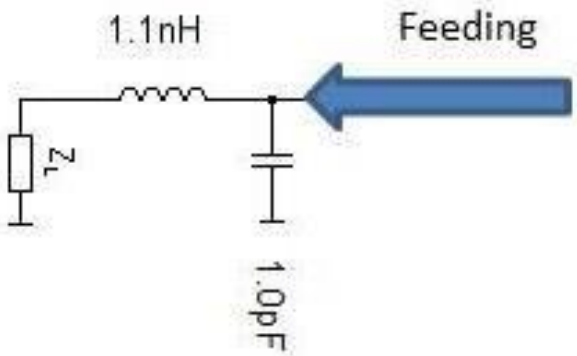

**Layout Dimensions in Clearance area(Size=5.2*5.0mm)**

50 ohm transmission Line

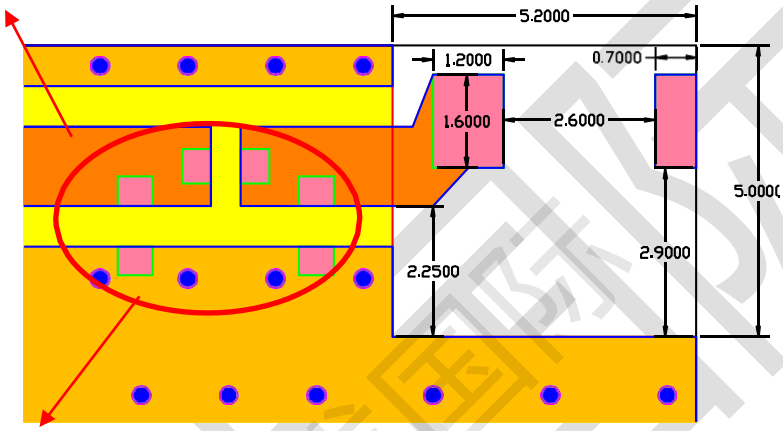


Matching Circuit

**FootPrint (Unit : mm)**

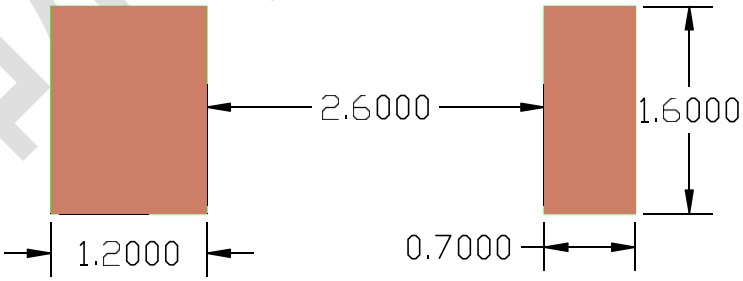


咏成國際

## 3. Measurement Results

### Return Loss

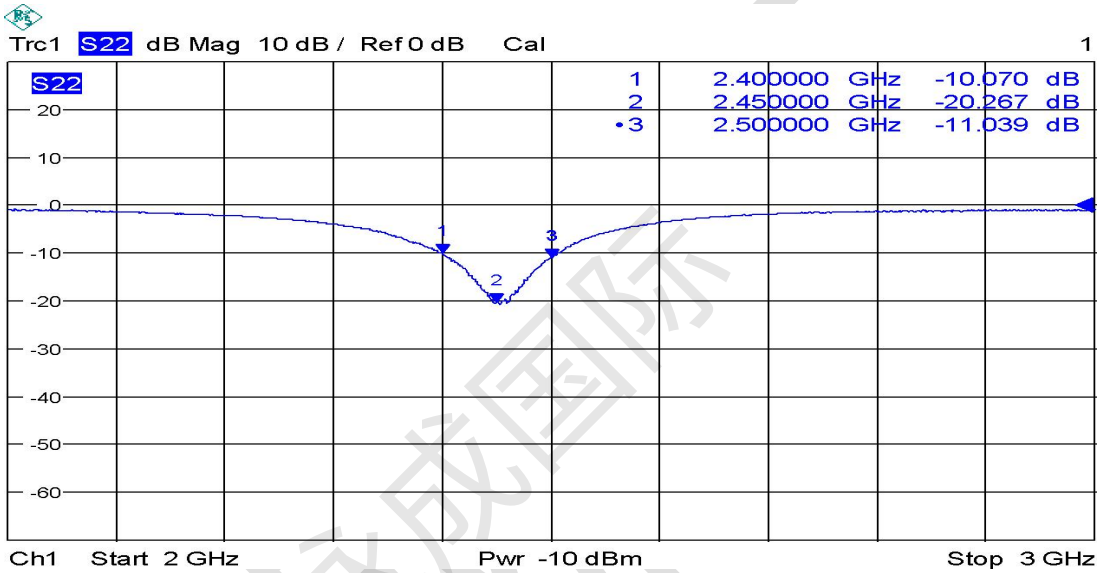

## Radiation Pattern

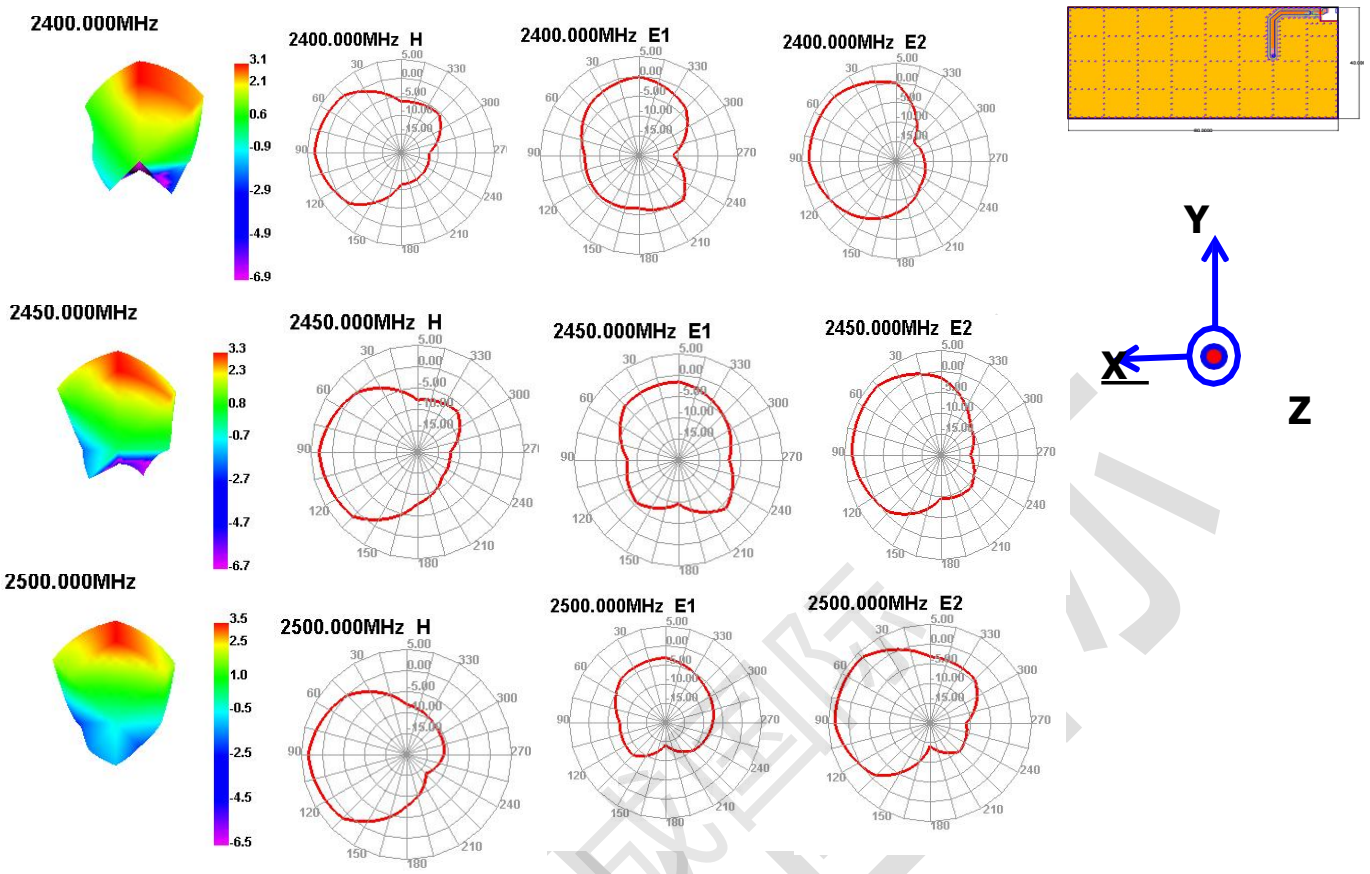


| | Efficiency |
|---|---|
| 2400MHz | 55.21 % |
| 2450MHz | 66.45 % |
| 2500MHz | 57.53 % |

咏成國際科技有限公司 電話: 13530576606
RAIN International Technology Co., Ltd. TEL: 13530576606

| Passive Test For BT2.4 | | | | | | | | | | | | |
|---|---|---|---|---|---|---|---|---|---|---|---|---|
| Freq (MHz) | Effi (%) | Effi (dB) | Gain (dBi) | Gain (dBd) | UHIS (%) | DHIS (%) | Max (dB) | Min (dB) | Directivity (dBi) | Beamwidth (3dB) | AttH (dB) | AttV (dB) |
| 2400 | 54.69 | -2.62 | 3.11 | 0.96 | 0 | 0 | 3.11 | -13.25 | 2.62 | 45 | 47.36 | 46.86 |
| 2410 | 48.05 | -3.18 | 2.59 | 0.44 | 0 | 0 | 2.59 | -14.03 | 3.18 | 90 | 47.4 | 46.9 |
| 2420 | 51.47 | -2.88 | 2.92 | 0.77 | 0 | 0 | 2.92 | -13.85 | 2.88 | 90 | 47.28 | 46.76 |
| 2430 | 53.44 | -2.72 | 3.07 | 0.92 | 0 | 0 | 3.07 | -13.27 | 2.72 | 90 | 47.35 | 46.78 |
| 2440 | 47.58 | -3.23 | 2.56 | 0.41 | 0 | 0 | 2.56 | -13.33 | 3.23 | 45 | 47.15 | 46.65 |
| 2450 | 55.93 | -2.52 | 3.25 | 1.1 | 0 | 0 | 3.25 | -12.38 | 2.52 | 45 | 47.33 | 46.85 |
| 2460 | 51.56 | -2.88 | 2.93 | 0.78 | 0 | 0 | 2.93 | -13.36 | 2.88 | 45 | 47.72 | 47.22 |
| 2470 | 53.02 | -2.76 | 3.17 | 1.02 | 0 | 0 | 3.17 | -15.08 | 2.76 | 45 | 47.36 | 46.93 |
| 2480 | 57.55 | -2.4 | 3.65 | 1.5 | 0 | 0 | 3.65 | -15.53 | 2.4 | 45 | 47.56 | 47.1 |
| 2490 | 46.01 | -3.37 | 2.79 | 0.64 | 0 | 0 | 2.79 | -15.8 | 3.37 | 45 | 47.05 | 46.67 |
| 2500 | 53.3 | -2.73 | 3.5 | 1.35 | 0 | 0 | 3.5 | -14.18 | 2.73 | 90 | 47.01 | 46.63 |

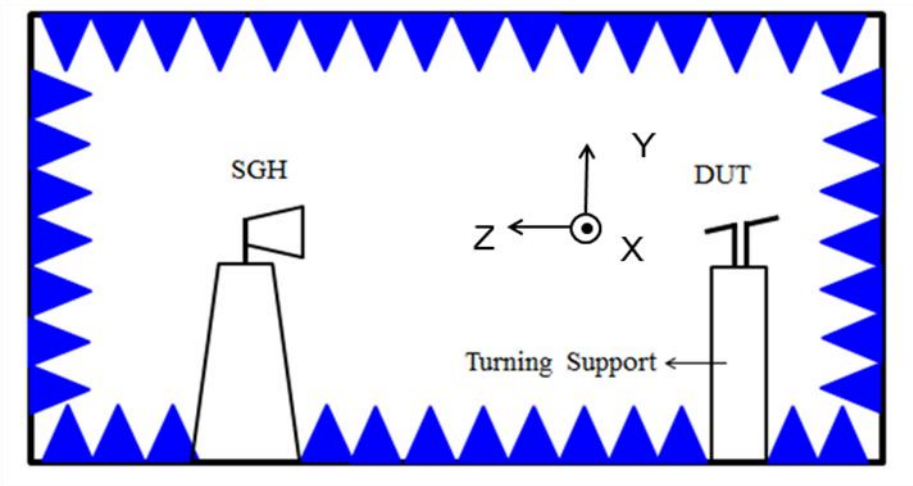


## 4. Reliability and Test Condictions

| ITEM | REQUIREMENTS | TEST CONDITION |
|---|---|---|
| Solderability | 1. Wetting shall exceed 90% coverage<br>2. No visible mechanical damage<br> 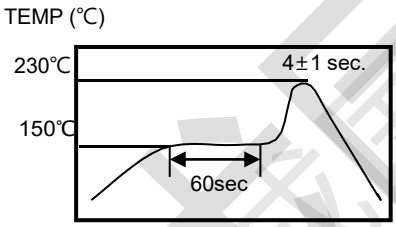 <br> | Pre-heating temperature:150℃/60sec.<br>Solder temperature:230±5℃<br>Duration:4±1sec.<br>Solder:Sn-Ag3.0-Cu0.5<br>Flux for lead free: rosin |
| Solder heat Resistance | 1. No visible mechanical damage<br>2. Central Freq. change :within ±6%<br> 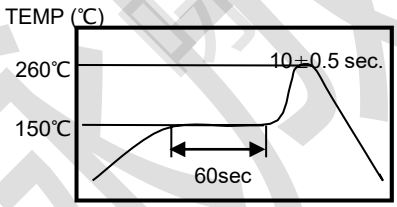 <br> | Pre-heating temperature:150℃/60sec.<br>Solder temperature:260±5℃<br>Duration:10±0.5sec.<br>Solder:Sn-Ag3.0-Cu0.5<br>Flux for lead free: rosin |
| Component Adhesion (Push test) | 1. No visible mechanical damage | The device should be reflow soldered(230±5℃ for 10sec.) to a tinned copper substrate A dynometer force gauge should be applied the side of the component. The device must with-ST-F 0.5 Kg without failure of the termination attached to component. |
| Component Adhesion (Pull test) | 1. No visible mechanical damage | Insert 10cm wire into the remaining open eye bend ,the ends of even wire lengths upward and wind together.<br>Terminal shall not be remarkably damaged. |

<table>
<tr><td>Thermal shock</td><td>1. No visible mechanical damage<br>2. Central Freq. change :within ±6%<br><table><tr><th>Phase</th><th>Temperature(℃)</th><th>Time(min)</th></tr><tr><td>1</td><td>+85±5℃</td><td>30±3</td></tr><tr><td>2</td><td>Room Temperature</td><td>Within 3sec</td></tr><tr><td>3</td><td>-40±2℃</td><td>30±3</td></tr><tr><td>4</td><td>Room Temperature</td><td>Within 3sec</td></tr></table></td><td>+85℃=>30±3min<br>-40℃=>30±3min<br>Test cycle:10 cycles<br>The chip shall be stabilized at normal condition for 2~3 hours before measuring.</td></tr>
<tr><td>Resistance to High Temperature</td><td>1. No visible mechanical damage<br>2. Central Freq. change :within ±6%<br>3. No disconnection or short circuit.</td><td>Temperature: 85±5℃<br>Duration: 1000±12hrs<br>The chip shall be stabilized at normal condition for 2~3 hours before measuring.</td></tr>
<tr><td>Resistance to Low Temperature</td><td>1. No visible mechanical damage<br>2. Central Freq. change :within ±6%<br>3. No disconnection or short circuit.</td><td>Temperature:-40±5℃<br>Duration: 1000±12hrs<br>The chip shall be stabilized at normal condition for 2~3 hours before measuring.</td></tr>
<tr><td>Humidity</td><td>1. No visible mechanical damage<br>2. Central Freq. change :within ±6%<br>3. No disconnection or short circuit.</td><td>Temperature: 40±2℃<br>Humidity: 90% to 95% RH<br>Duration: 1000±12hrs<br>The chip shall be stabilized at normal condition for 2~3 hours before measuring.</td></tr>
</table>

## 5. Soldering and Mounting

Mildly activated rosin fluxes are preferred. The minimum amount of solder can lead to damage from the stresses caused by the difference in coefficients of expansion between solder, chip and substrate. The terminations are suitable for all wave and re-flow soldering systems. If hand soldering cannot be avoided, the preferred technique is the utilization of hot air soldering tools.

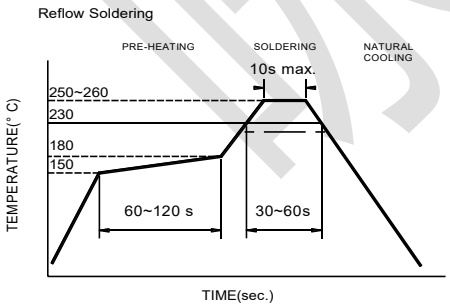


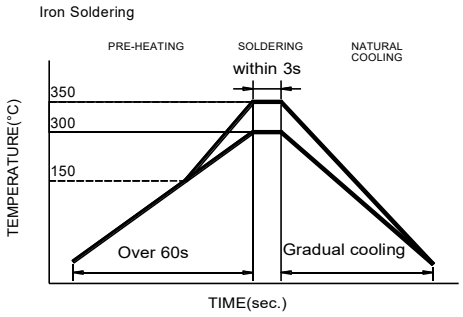


Recommended temperature profiles for re-flow soldering in Figure 1.

Products attachment with a soldering iron is discouraged due to the inherent process control limitations. In the event that a soldering iron must be employed the following precautions are recommended.

咏成國際科技有限公司 電話: 15530576606
RAIN International Technology Co., Ltd. TEL: 15530576606

- Preheat circuit and products to 150℃
- Never contact the ceramic with the iron tip
- Use a 20 watt soldering iron with tip diameter of 1.0mm
- 280℃ tip temperature (max)
- 1.0mm tip diameter (max)
- Limit soldering time to 3 sec.

## 6. Packaging Information

◆ **Tape Specification:**

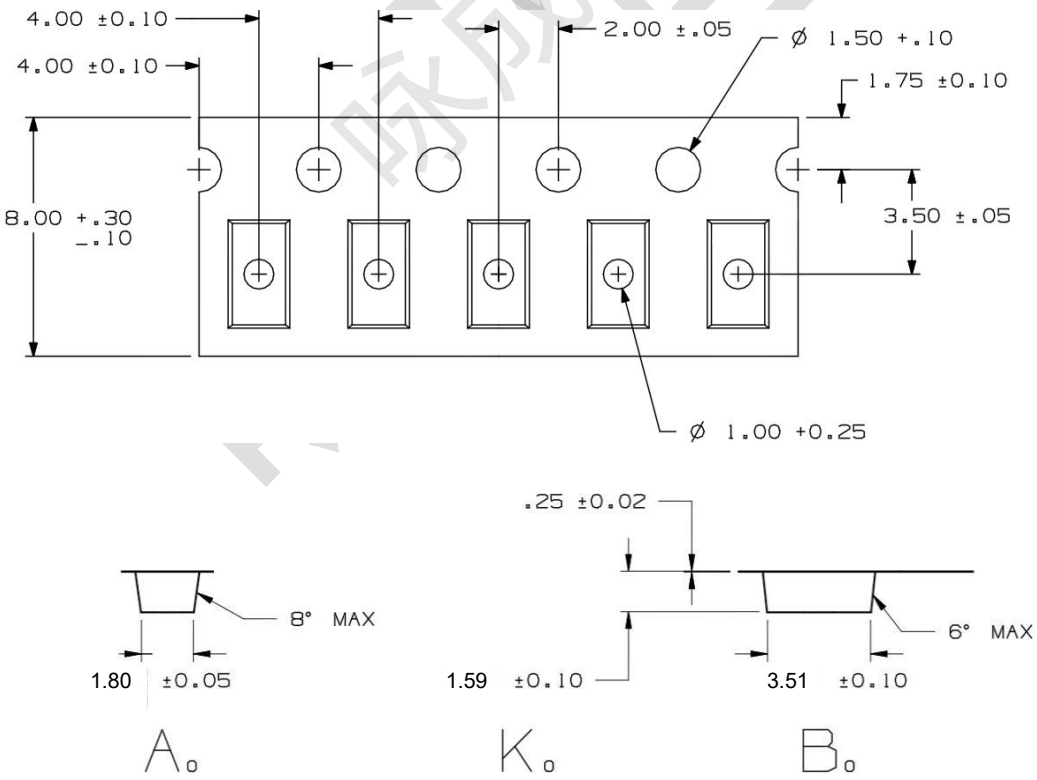


◆ **Reel Specification: (7", Φ180 mm)**

咏成國際科技有限公司 電話: 13530576606
RAIN International Technology Co., Ltd. TEL: 13530576606

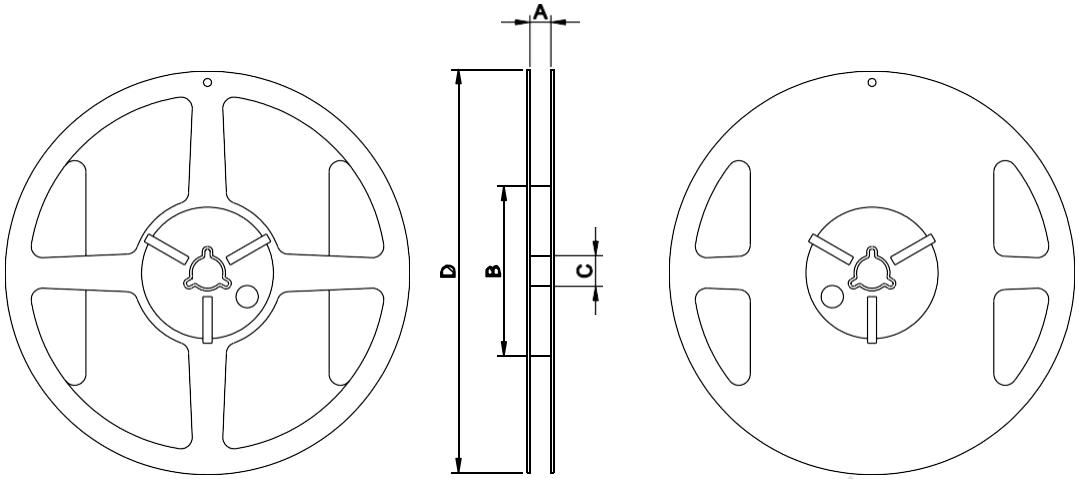


7" x 8 mm

| Tape Width(mm) | A(mm) | B(mm) | C(mm) | D(mm) | Chip/Reel(pcs) |
|---|---|---|---|---|---|
| 8 | 9.0±0.5 | 60±2 | 13.5±0.5 | 178±2 | 3000 |

## 7. Storage and Transportation Information

### Storage Conditions

To maintain the solderability of terminal electrodes:

1. Temperature and humidity conditions: -10~ 40℃ and 30~70% RH.
2. Recommended products should be used within 6 months from the time of delivery.
3. The packaging material should be kept where no chlorine or sulfur exists in the air.

### Transportation Conditions

1. Products should be handled with care to avoid damage or contamination from perspiration and skin oils.
2. The use of tweezers or vacuum pick up is strongly recommended for individual components.
3. Bulk handling should ensure that abrasion and mechanical shock are minimized.