AiSafety

# AiSafety Smart Lock E100 User Manual

Read this user manual carefully before use, and retain it for future reference.

# Precautions

- Do not use the device in an environment where the temperature is too high or too low, do not expose the device to strong sunlight or a too humid environment.
- The suitable temperature for this product is-10 ℃-50 ℃ for internal lock (battery) (0-45 ℃ for charging mode) and-30 ℃-70 ℃ for external lock.
- The device is suitable for door thickness of 35-55 mm, for doors with glass, width from door edge to glass ≥ 120 mm.
- There is a risk of explosion if the incorrect battery type is used.
- Do not swallow batteries, there is a hazard of chemical burns.
- Batteries should be kept away from children.
- Please do not throw the battery into the fire or hot furnace, or mechanically smash or cut the battery.
- Leaving the battery in an extremely hot surrounding environment may lead to an explosion or leakage of flammable liquids or gases; and if the battery is affected by extremely low pressure, it can lead to an explosion or leakage of flammable liquids or gases.
- When the battery is low, please replace it timly. If the battery is exhausted, verification may fail or the door cannot be opened (emergency plan: emergency power supply can be used through the Typ-C interface, or use a physical key to unlock the door).
- Please keep the physical key properly and store it in an accessible and secure place in case the electronic function fails.

Do not use the product in any manner other than that described in this instruction manual to avoid personal injury or property damage. Users should abide by the laws and regulations of the country or region where the equipment (is used) is located, observe occupational ethics, pay attention to safety obligations, and it is strictly forbidden to use our products or equipment for any illegal purpose. Our company shall not be responsible for the legal liability of any violator under any circumstance.

# Regulatory Compliance

Federal Communications Commission (FCC) compliance statement:

1. This device complies with part 15 of the FCC Rules. Operation is subject to the following two conditions:
   (1) This device may not cause harmful interference, and
   (2) this device must accept any interference received, including interference that may cause undesired operation.
2. Changes or modifications not expressly approved by the party responsible for compliance could void the user's authority to operate the equipment.

Note: This equipment has been tested and found to comply with the limits for a Class B digital device, pursuant to part 15 of the FCC Rules. These limits are designed to provide reasonable protection against harmful interference in a residential installation. This equipment generates, uses and can radiate radio frequency energy and, if not installed and used in accordance with the instructions, may cause harmful interference to radio communications. However, there is no guarantee that interference will not occur in a particular installation. If this equipment does cause harmful interference to radio or television reception, which can be determined by

# Regulatory Compliance

turning the equipment off and on, the user is encouraged to try to correct the interference by one or more of the following measures:

– Reorient or relocate the receiving antenna.
– Increase the separation between the equipment and receiver.
– Connect the equipment into an outlet on a circuit different from that to which the receiver is connected.
– Consult the dealer or an experienced radio/TV technician for help.

RF Exposure statement:

This equipment complies with FCC radiation exposure limits set forth for an uncontrolled environment. This equipment should be installed and operated with minimum distance of 20 cm between the radiator and your body. This transmitter must not be co-located or operating in conjunction with any other antenna or transmitter.

# Product Overview

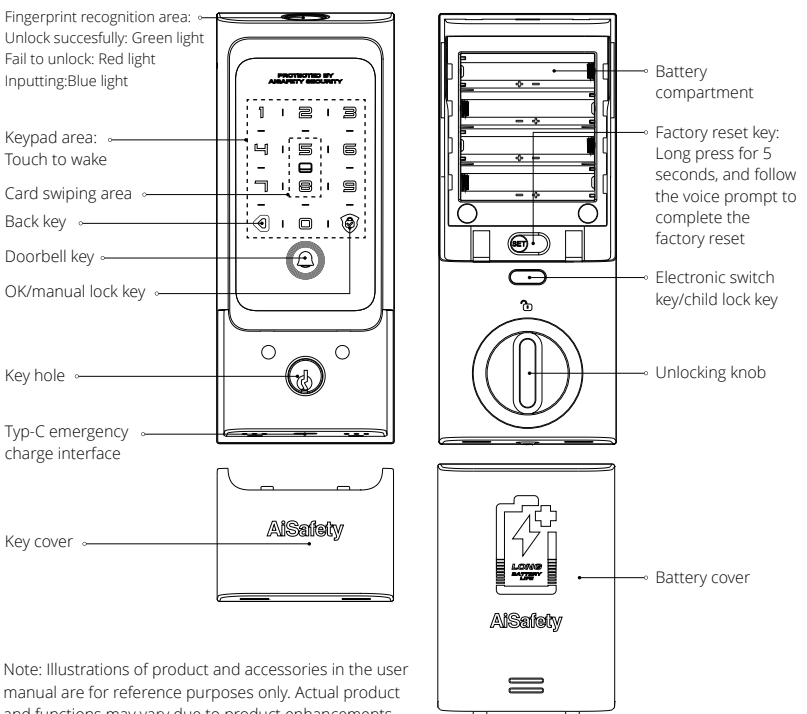


Note: Illustrations of product and accessories in the user manual are for reference purposes only. Actual product and functions may vary due to product enhancements.

# Parts in the Box

Latch and Strike

A

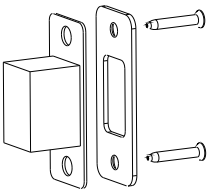

B

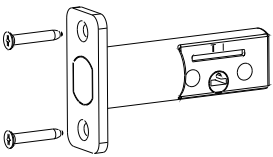

Exterior Assembly

C

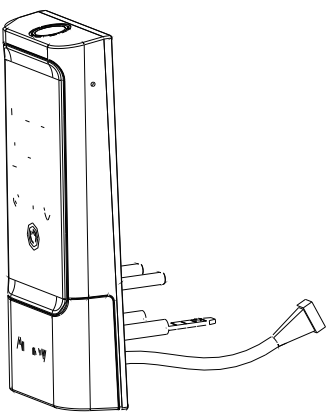

X2

X1

Interior Assembly

D

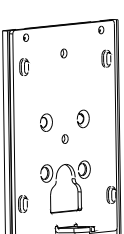

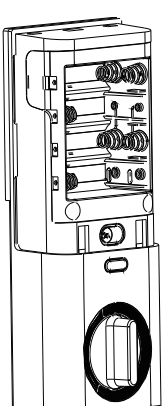

E

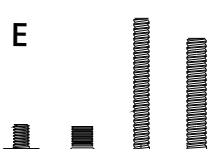

X1 X2 X2 X2

F

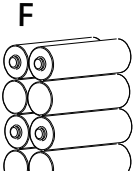

G

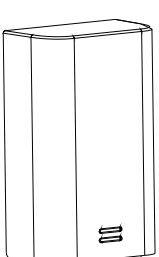

# How to Install

## Required Tools

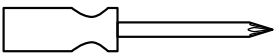

Phillips head screwdriver

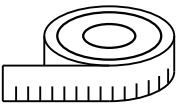

Tape Measure

## Additional Tools (depending on application)

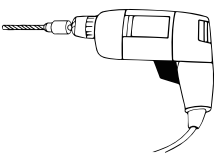

Drill

Hole Saws

Wood Mortise Chisel

Pencil

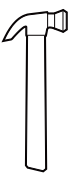

Hammer

## 1. Check dimensions

If the door hole meets the requirements shown in the diagram, you can directly proceed to the next step, otherwise, you need to open holes according to the hole opening diagram.

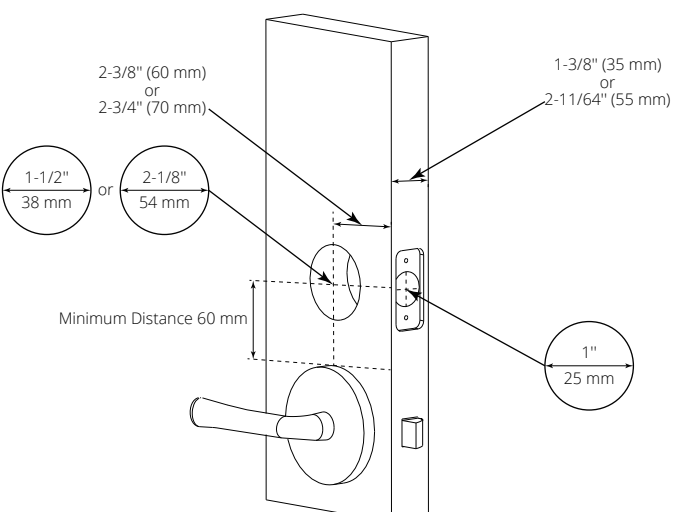

# How to Install

## 2. Adjust the backset of latch (if needed)

If the bolt hole is  centered in the door opening, there is no need to adjust the lock body; if the bolt hole is not centered in the door opening, the lock body needs to be adjusted.

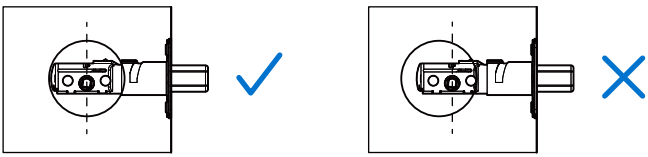

Latch Adjustment (only if needed)

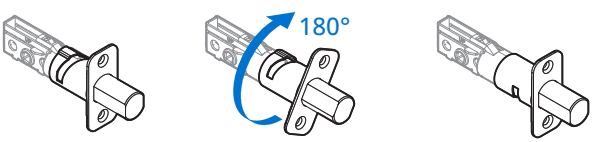


## 3. Install the lock body

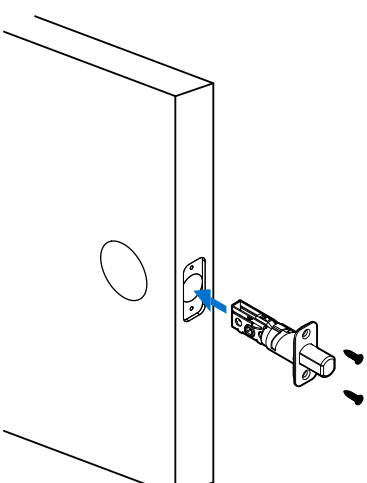

1. Insert the lock body into the door frame and tighten the screws.

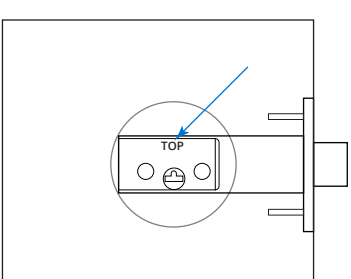


2.Make sure the “TOP” on the lock body is up.

# How to Install

## 4. Install the front lock

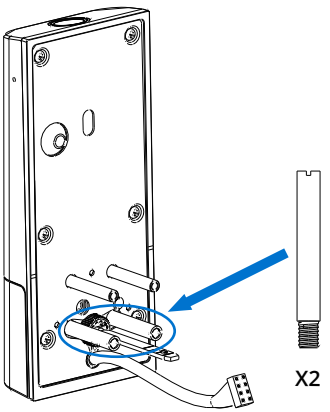


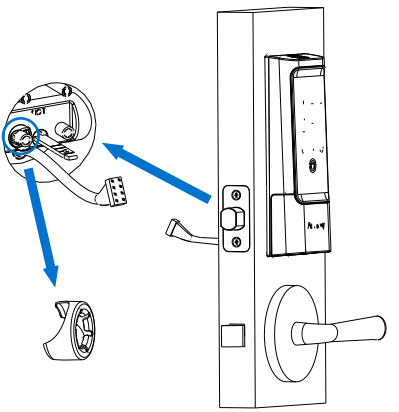

1. Adjust the thick linking studs for different door thicknesses (when door thicknesses ≥ 45 mm, use the studs in the accessories package).

2. Hold the front door lock against the outer door face so that the lock cylinder flat bar/ linking studs passes through the corresponding hole, and the front and back linking wire passes underneath the lock body, and clamp the thick linking stud with a thrust ring.

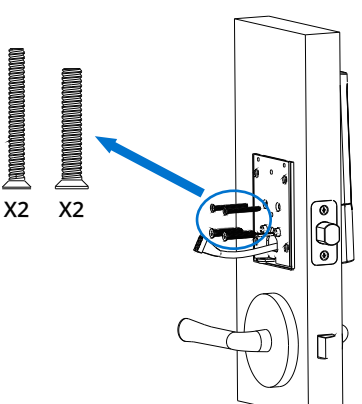


3. Secure the front lock using 4 screws through the rear iron plate component.

# How to Install

## 5. Install the back lock

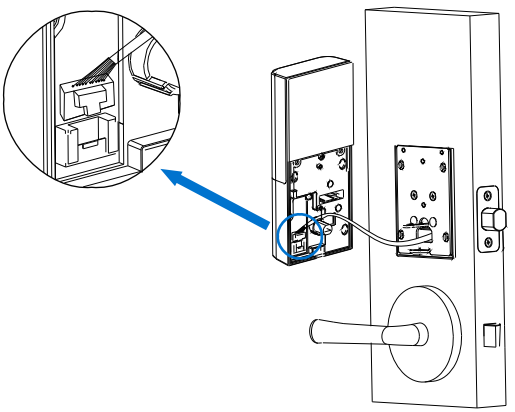

1. Insert the front and back lock linking wires into the corresponding terminals of the back lock.

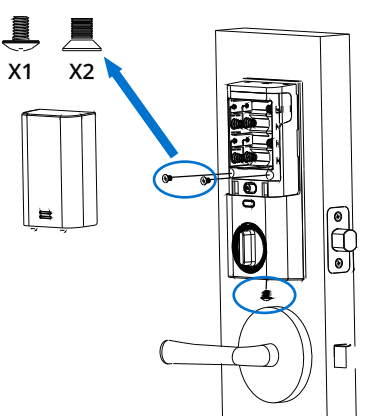


2. Stuff the excess wire into the door hole, stick the back lock tightly to the inner door, check whether the knob opens and closes smoothly, and whether the front and back lock panels are parallel to the door edge. After adjusting it to parallel, fix the three back lock screws from the battery cover in turn, and finally fix the bottom of the back lock with the back lock panel screws.

# How to Install

## 6. Install the door holder plate and door holder box

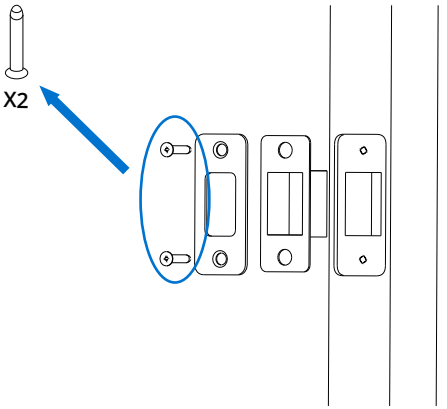


Install the door holder plate and door holder box in the order shown in the diagram and secure with screws.

## 7. Install battery, power on and use

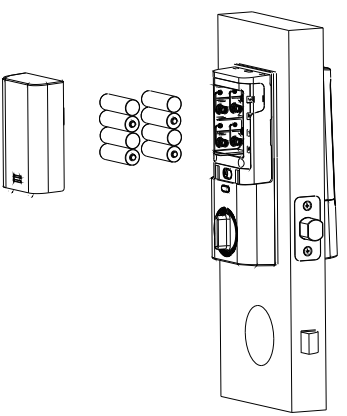

Install the 8 AA batteries correctly and complete the door lock setup and network distribution on the local end of the door lock, and then cover the battery cover when the network distribution is completed.

# Preparation before Use

## 1. Equipment and network requirements

Smart devices: A smartphone/tablet (iOS or Android) with Wi-Fi or cellular network is required.
Network environment: Ensure that a 2.4GHz Wi-Fi network is available(some devices do not support 5GHz) and the network connection is stable.

## 2. Device reset (initialization)

Long press the “set” button for 5 seconds until you hear the voice prompts, then release it and follow the voice prompts to reset the device.
The above steps can ensure that the device starts normally and connects to the network, and prepares for subsequent configuration (such as connecting to the mobile APP, add user permissions, etc.).

# Door lock Settings

Quick language switch in the initialization state: 501+OK key (English); 502+OK key (Spanish); 503+OK key (German); 504+OK key (French); 505+OK key (Russian); 506+OK key (Chinese).

In the initialization state, any secret key can unlock the door, and the voice prompts say“Please add an administrator as soon as possible”.

To wake up the door lock, press Return + Confirm to enter the door lock for local setting, when no administrator is set, the voice prompts “Please enter the fingerprints, passwords or cards to be added”, press Confirm to confirm after entering the password. If you have set up the administrator, you need to verify the administrator secret key, after successful verification, select the corresponding menu according to the voice prompts.

### 1. Add User: Add Administrator user/normal User

Wake the door lock panel, press the Back key + OK, follow the voice broadcast and the voice prompt, press the "1"  to enter "Add User";

1.1: Add administrator, after entering the menu, press the “1” to “add administrator" and the administrator fingerprints, passwords or cards according to the voice prompts;

1.2: Add normal users, press "2" to "add normal users", add normal user fingerprints, passwords or cards according to the voice prompts; press"3" to "add secret key", enter the user ID and add the fingerprint(limited to 5), password(limited to 1) or card(limited to 2) according to voice prompts.

Note: Users number is generated in order, 01-09 for the administrator, 100-199 for ordinary users.

### 2. Delete users: Delete users by number

Wake the door lock panel, press the return key + OK, according to the voice broadcast, press the “2”to enter the “Delete Users”; enter the user ID that needs to delete the secret key, press the OK to confirm, and delete the user's fingerprint, password or card according to the voice prompts.

Note: Users number is generated in order, 01-09 for the administrator, 100-199 for ordinary users.

# Door lock Settings

## 3. System settings: Door lock calibration (left/right open setting)/auto locking/ volume setting/language setting/version inquiry/factory reset

Wake the door lock panel, press the return key+OK, according to the voice broadcast, press "3" to enter the "system settings" ;

3.1: Door opening direction setting: After hearing the voice prompts, press “1""set the door opening direction”, and set the left or right opening of the door according to the voice prompts.

3.2: Auto locking setting:Press “2” “Auto locking”, input 1-800 seconds of auto locking time , press OK to confirm, input 0 to close the auto locking.

3.3: Volume setting: Press "3" "Volume Setting", set the system volume according to the voice prompts(press 2 to increase volume, press 8 to decrease volume, mute not supported), door bell volume(press 2 to increase volume, press 8 to decrease volume, press 0 to mute) and alarm volume(press 2 to increase volume, press 8 to decrease volume, press 0 to mute);

3.4: Voice setting: Press "4" "Language Setting", set English, Spanish, German, French, Russian and Chinese according to the voice prompts;

3.5: Query version number: Press the "5"  "Version Query" to query the current firmware version number;

3.5: Factory reset: Press "6""Factory Reset", press OK to restore factory settings, and press the return key to exit; By long press the setting button in the back lock battery cover for 5 seconds, the voice prompts say "Restore factory settings, please press the OK to confirm, and press the return key to exit". Press the confirmation button on the front lock panel to start restoring factory settings. After successful reset, the voice prompts say "Factory reset successful".

## 4. Pairing mode: Scan the QR code in the APP for network distribution /enter the pairing code for network distribution

Wake the door lock panel, press the Back key + OK, follow the voice broadcast, and press the "4" to enter the "Pairing Mode". The voice prompt say "Pairing mode is enabled, please use a third-party APP for pairing". Scan the code in the mobile APP for network distribution, wait for the connection, the voice prompts say "networking successful" if the pairing fails, and the voice prompt say "operation failed".

## 5. Connect to APP

### 5.1:  Join Apple Home

5.1.1: After powering on the door lock for the first time, open the Apple Home app on your iOS device, click the "+" icon in the upper right corner, and select Add Accessories.

5.1.2: Scan the Matter QR code according to prompts (the QR code is on the inside of the battery cover of the interior door lock). Then follow the directions to add users.

Note: To access the Apple Home matter ecosystem, you need to have a HomePod, HomePod mini or Apple TV that has been set up as the home hub. It is recommended to use the latest version of iOS or iPadOS system.

### 5.2: Access to Google Home, Samsung SmartThings or Alexa ecosystem

5.2.1: Download the APP corresponding to the environment of each ecosystem, namely Gogole Home, Samsung SmartThings, and Alexa.

# Door lock Settings

5.2.2: Configure the Matter hub with Thread protocol required by each ecosystem
Google Home：
Nest Hub(2nd Gen)、Nest Hub Max、 Google Nest Wifi Pro
SmartThings：
Aeotec Smart Home Hub、SmartThings Station、SmartThings Hub Dongle、SmartThings Hub V3
Alexa：
Echo (4th Gen), Echo Show 21, Echo Show 15 (2nd Gen), Echo Show 10 (3rd Gen), Echo Show 8 (3rd Gen),Echo Hub, Echo Studio (2nd Gen), Echo Studio (1st Gen), Echo Plus (2nd Gen)

5.2.3: Use the APP to scan the Matter QR code, and then follow the directions to add users.

## 6. Unlocking Method

### 6.1: Fingerprint unlock

6.1.1: After inputting fingerprint users, the users verify the fingerprints and the door lock automatically recognizes the users' fingerprints in the locked and closed state.

6.1.2: After passing the verification, the door lock will automatically open, the voice prompts "Please open the door"; if the fingerprint verification fails, the red indicator light is on, the door lock takes no action, and the door lock voice prompts say "Verification failed."

### 6.2: Password unlock

6.2.1: After inputting the password users, users touch the keypad area to wake the door lock, the keypad light is on, users enter a 8-digit password and press "√"to confirm.

6.2.2: After passing the verification, the door lock will automatically open, the voice prompts "Please open the door"; if the password verification fails, the red indicator light is on, the door lock takes no action, and the door lock voice prompts say "Verification failed."

### 6.3: IC card unlock

6.3.1: After inputting the IC card users, users put the card close to the card swiping area, and the door lock automatically identifies the card;

6.3.2: After passing the verification, the door lock will automatically open, the voice prompts "Please open the door"; if the IC card verification fails, the red indicator light is on, the door lock takes no action, and the door lock voice prompts say "Verification failed."

## 7. Alarm prompt

7.1: Low battery alarm: When the battery voltage is less than or equal to 4.8 V, the voice prompt say "The battery  is low, please replace the battery in time" every time you unlock the door.

7.2: Trial and error alarm: If there are 5 consecutive input errors (within 5 minutes from the last input), a trial and error alarm will be generated, the system will be locked for 120 seconds, and the voice say "The system is locked, please try again after 2 minutes".

7.3: Anti-prying alarm: When the lock is dismantled, the pressed anti-prying switch pops up to trigger the anti-prying alarm, and the lock end sounds an alarm.

# Replacing the battery

When the battery is exhausted, please open the back lock battery cover, first take out the 4 AA alkaline batteries in the first layer, and then pull out the pull strap in the battery compartment to take out the remaining 4 batteries.

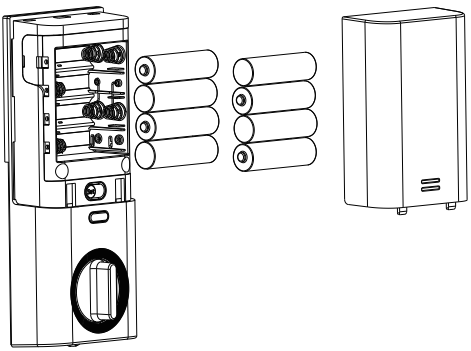

# How to restore factory settings

Open the battery cover, long press the SET key for 5 seconds, and follow the voice prompts to restore the factory settings.

Note:

1. The reset will clear all user information, making any user be able to verify and unlock.
2. After rese, please follow the directions to reset the door lock as soon as possible (such as add user fingerprint, password, etc.).

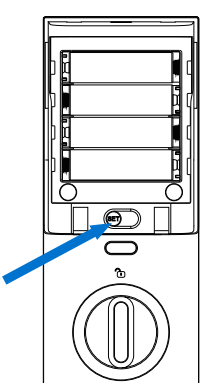

# How to operate the lock cylinder cover

Hold the sides of the lock cylinder cover with your fingers and remove it downwardly.

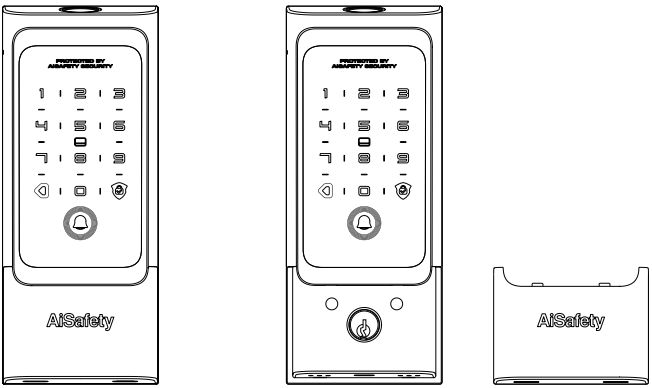


Manufacturer: Foshan Viomi Electrical Technology Co., Ltd.
Address: 13th Floor, No.7, Industrial RoadLicun Village, Lunjiao Town, Shunde District , Foshan City,Guangdong Province , P.R. China
E-mail: support@aisafety.us