Manual

What's in the box

1 x Light projector
1 x Power adapter（AU.EU.UK.US)
1 x Remote controller
1 x User manual
1 x Ground stake
1 x Lampstand
18 x Films

Assembly & Installation

1. Installing the ground stake or lampstand:
First remove the screw on the ground stakes and put them into the corresponding screw holes of the lamp. Then fix the screw with your fingers, and screw the ground stake or lampstand clockwise(to remove it, loosen it counterclockwise).
2. You can change the projection angle of the lamp by 180° up and down.
3. Pull the power cable through and after plugging the waterproof plug, wind the nut in tight.
4. Test the power.

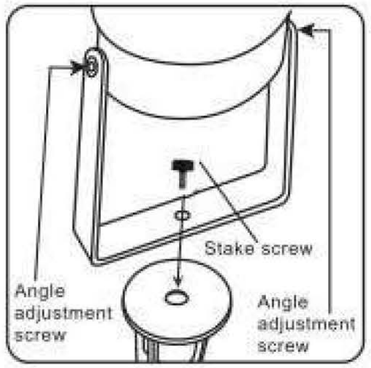

Assembly diagram 1

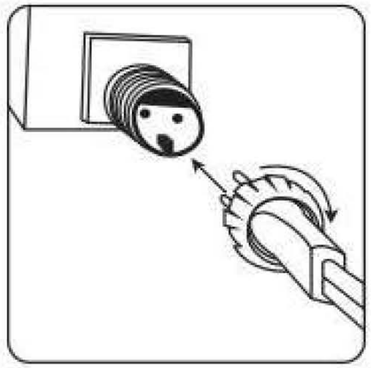

Assembly diagram 2

LUCKLED Smart Remote Controller

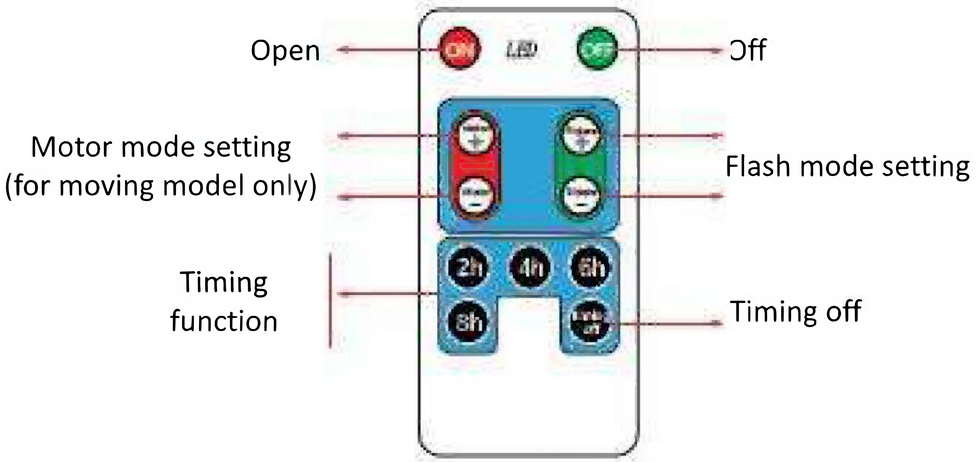

Replacing Batter

1. Pull the battery tray out of the battery compartment of the remote control.
2. Place the new CR 2025 button cell battery in the tray slot according to the indicated polarity.
3.Close the bttery tray .

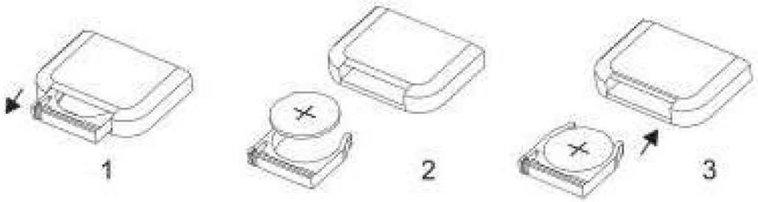

CARE & MAINTENANCE

- Only use the included Power Adapter and ensure that it's properly connected to a grounded outdoor power outlet.
- Do not point the projection light towards people, vehicles, or traffic routes.
- Do not use chemicals or detergents to clear up the product.

Notice

1. Please only use the supplied transformer to connect to a proper grounded external plug.

2. Do not disassemble the product by yourself. Please return back to our factory for repair if there is any quality problem.

3. It is recommended that the continuous use time is less than 8 hours.

4. Heat resistant: 113°F/45℃; Frost resistant: -4°F/-20℃

FCC Information

This device complies with Part 15 of the FCC Rules, operation is subject to the following two conditions: (1) This device may not cause harmful interference,and (2) this device must accept any interference received, including interference that may cause undesired operation.
Warning: Changes or modifications to this unit not expressly approved by the party responsible for compliance could void the user’s authority to operate the equipment.

NOTE: This equipment has been tested and found to comply with the limits for a Class B digital device, pursuant to Part 15 of the FCC Rules. These limits are designed to provide reasonable protection against harmful interference in a residential installation. This equipment generates, uses and can radiate radio frequency energy and, if not installed and used in accordance with the instructions, may cause harmful interference to radio communications. However, there is no guarantee that interference will not occur in a particular installation.

If this equipment does cause harmful interference to radio or television reception,
which can be determined by turning the equipment off and on, the user is encouraged to try to correct the interference by one or more of the following measures:

-- Reorient or relocate the receiving antenna.

-- Increase the separation between the equipment and receiver.

-- Connect the equipment into an outlet on a circuit different from that to which the receiver is connected.

-- Consult the dealer or an experienced radio/TV technician for help.

The device has been evaluated to meet general RF exposure requirement.

The device can be used in portable
exposure condition without restriction