# Hanshow Nebular Series Product Manual

**V2.0.7**

**Nebular Pro-154CQ-N**

**FCC ID:2BPF3-NP154C0**

Hanshow Confidential
HS1236 Confidential 2024-08-15

For more information, visit our website at: [https://www.hanshow.com](https://www.hanshow.com)

Hanshow Confidential
HS1236 Confidential 2024-08-15

# STATEMENT

This document and all its contents contained remain the proprietary material of Hanshow Technology Co., Ltd. (Hanshow) and are protected by Chinese laws and applicable international conventions on copyrights. Any reproduction, transmission, disclosure, revision, modification or use otherwise of this document or the whole or part of its contents, in whatever form and by whatever means, is not permitted without prior express written authorization from Hanshow. Offenders will be liable for any and all damages caused by their offence hereof and will be subject to all remedies that Hanshow is entitled to seek under applicable laws.

Hanshow Confidential

# ABOUT THE MANUAL

Thisdocument describes Nebular series, including features, specification, package, and precautions.

Please read this manual carefully before using the device in first, retain the manual for subsequent use or for the next owner. If the instructions contained in this manual are insufficient to resolve issues that occur during device operation or maintenance, please contact Hanshow Technical Customer Service Center (China: 400-0365-305; Netherlands: 0800-022-5037; Belgium: 0800-71-335; France: 0800-91-7602; Thailand: 1800-011-185) directly, we will provide you with multi-channel technical services.

# TARGET USERS

This document provides engineers with necessary data and related guidelines of Nebular series. Users have to master the basic knowledge on communication and network and so on. This manual is applicable for the below engineers:

- Testing Engineer
- Technical Support Engineer
- After Sales Engineer
- Installation Engineer

Hanshow Confidential

# SYMBOL DESCRIPTION

| Icon | Description |
|---|---|
| ⚠ | Information indicated with this icon should be paid special attention and attached great importance by the reader. |
| 🕮 | Information indicated with this icon is the explanation on the formal text for the readers to comprehend the text better. |
| [X-X] | It means special noun definition is provided here. |

# EXPLANATION OF TERMS

| Acronym | Expanded form | Description |
|---|---|---|
| PriSmart | PriSmart Smart Retail System | Manage all store product data and issue price update command, as well as support multi-store management. |
| ESL-Working | ESL-Working System | Manage all the APs and ESLs in store, and ESL-Working 3.0 and above supports multi-store management. |
| ESL Controller | ESL Controller | Also called AP that is used for data interaction between ESL-Working and ESL Controller. |
| ESL | Electronic Shelf Label | Used for displaying product information like promotion information, price, and grade. |

Hanshow Confidential

# Table of Contents

1 Overview ..... 1
1.1 System architecture ..... 1
1.2 Features ..... 2
2 Product view ..... 3
2.1 Product appearance ..... 3
2.2 Dimensions ..... 5
3 Hardware performance ..... 10
3.1 Specifications ..... 10
3.2 Identifying your ESLs ..... 12
3.3 Product nameplate ..... 12
4 Packaging and accessories ..... 13
4.1 Packaging ..... 13
4.2 Product accessories ..... 14
5 Application scenarios ..... 15
6 Precautions ..... 16
6.1 Transportation considerations ..... 16
6.2 Precautions for use ..... 16
7 FCC ID warning ..... 18
7.1 Warning for nameplate ..... 18
7.2 Warning for product manual ..... 18
8 IC statement ..... 19
9 UKCA statement ..... 20

Hanshow Confidential

# 1 Overview

The Nebular series isHanshow's newest generation Electronic Shelf Labels (ESLs). TheyadoptE-ink screen to achievepage switching, light flashing,pricing and so onbased on 2.4GHz wireless communication. With ultra-thin, extended life and high-definition visual effects, theNebular series widely servestraditional retail, new retail, department stores and fashion, pharmacies, culture, and entertainment.

## 1.1 System architecture

Hanshow ESL system includes ESLs, ESL Controller,ESL-Working, PriSmart/ShopWeb, Database, Integrationserver, CloudMonitorand Handheld Terminal (PDA), as shown in*Figure 1-1*. Specifically, theESLsare used for electronicallydisplaying product informationsuch as name and price, and services available for customers.

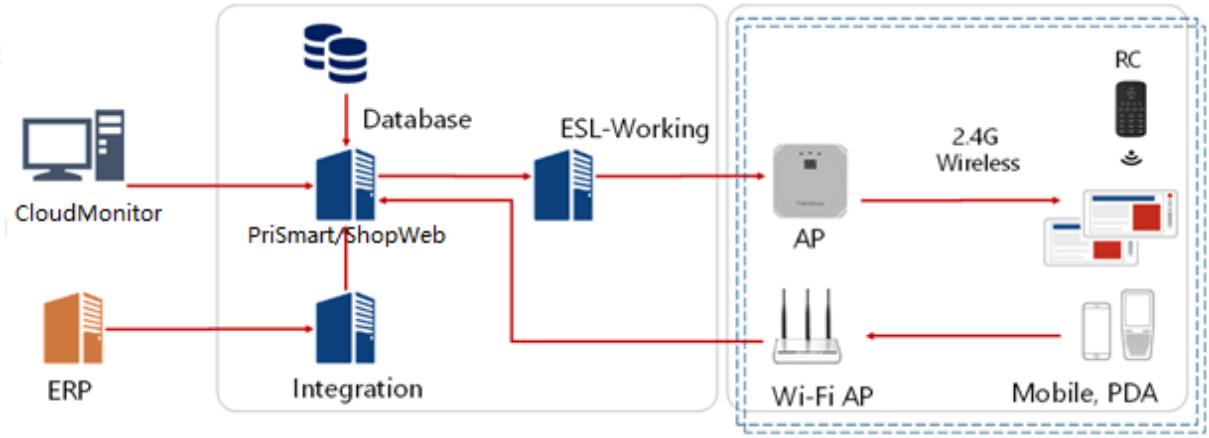


**Figure 1-1Hanshow ESL system architecture**


Hanshow Copyright Reserved ©
Hanshow Technology Co., Ltd.

## 1.2 Features

The features of Nebular series are as follows:

- Nebular ESLs come in 10 ESL sizes:1.54”, 2.0”, 2.13”, 2.66”, 2.9”,3.46”,3.5”, 4.2”, 5.83”and 7.5”.
- Display colors include: BWR (Black-White-Red) display (OnlyBW(Black-White) display for freezer ESLs).
- Operating frequency band:2,402MHz ~ 2,480MHz.
- IP68 waterproof and dustproofdesign.
- Built-in LED indicator: 7-colordisplayassists in product location, promotion reminder,out-of-stockreminder, andlowpower reminder.
- Embedded NFC chip:SupportsNFC function. NFC response distance is 10mm.
- The freezer ESLs come in two sizes:2.13”, 2.66” and 3.5”thatfunction in temperature -25°C ~ 0°C.
- Nebular ESLs supportmultiple functions, including binding/unbinding, updating, instantflashing, multi-page storage, page switching, geolocation, temperature collection,NFC function and so on.
- SupportsAES-128 encryption.
- SupportsOTA(Over-The-Air) upgrade.

Hanshow Confidential

# 2 Product view

This chapter describes Nebular series' appearance and composition.

## 2.1 Product appearance

*Figure 2-1*shows Nebularfamily.

**Figure 2-1Nebular family**

Each section of Nebular and its relative descriptionis shown in *Figure 2-2* and *Table 2-1*.

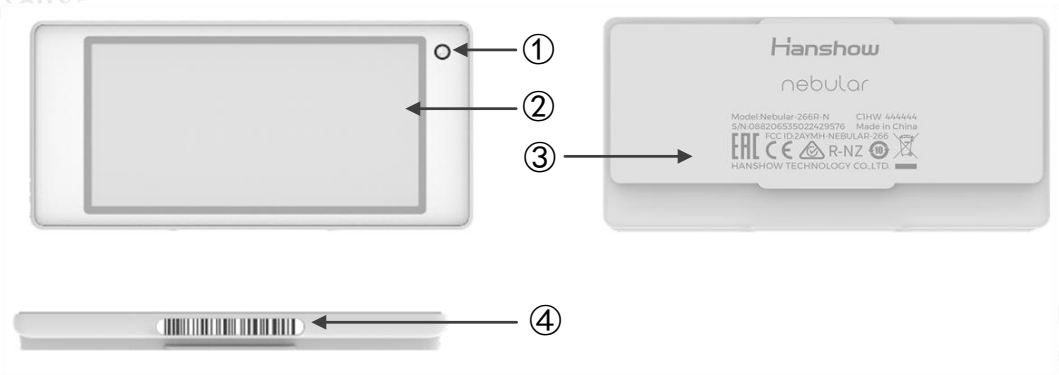


**Figure 2-2 Key area of Nebular**

**Table 2-1Each area description of Nebular**

| No. | Name | Description |
|---|---|---|
| 1 | LED indicator | Supports 7-color flashing. |
| 2 | Display area | Supports BWR display on E-ink screen.<br>● Displaytext, images, barcode, QR code and others.<br>● Product informationdisplay such as name, price, origin, unit, grade, phone number, barcode, and QR code. Supportscustomizable display position and fontsize.<br>● Supports 8-pagestorage and page switchfunctionality. |
| 3 | Nameplate | Product information mark, including model, S/N, and certifications such as CE and UKCA. |
| 4 | Barcode area | 18-digit barcode used for product binding and maintenance. |

## 2.2 Dimensions

This sectioncoversthe dimensions of Nebular series.

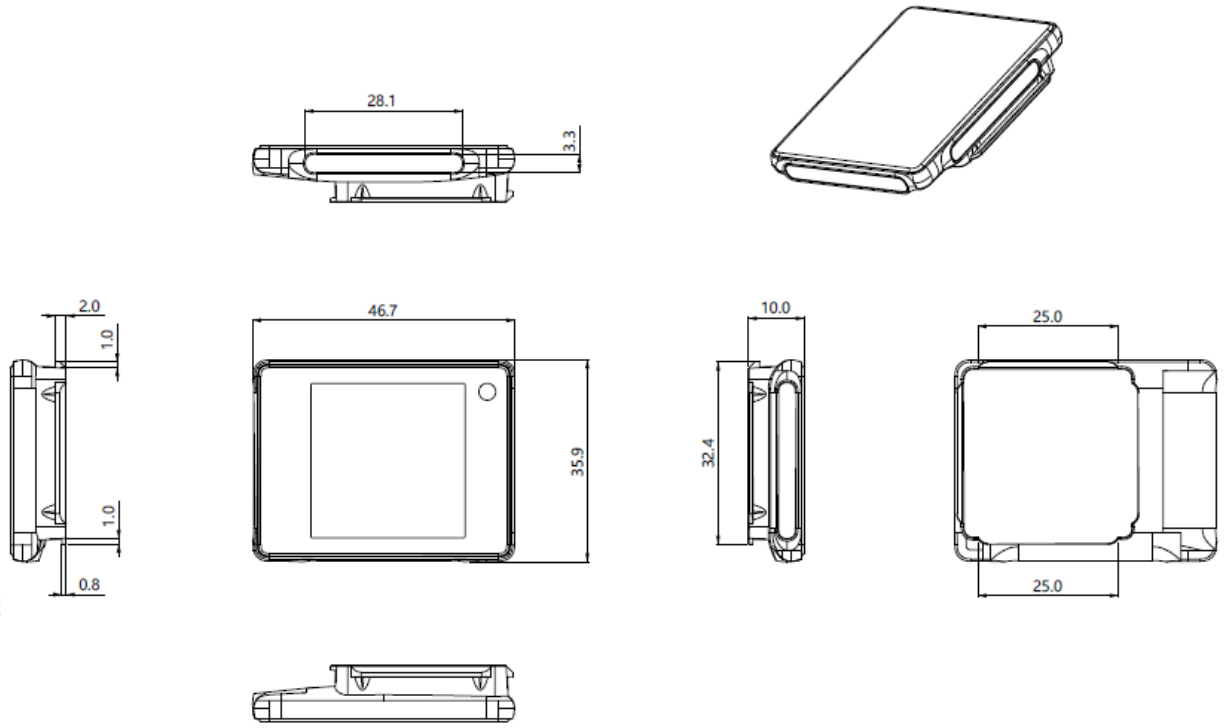


**Figure 2-31.54”dimension**

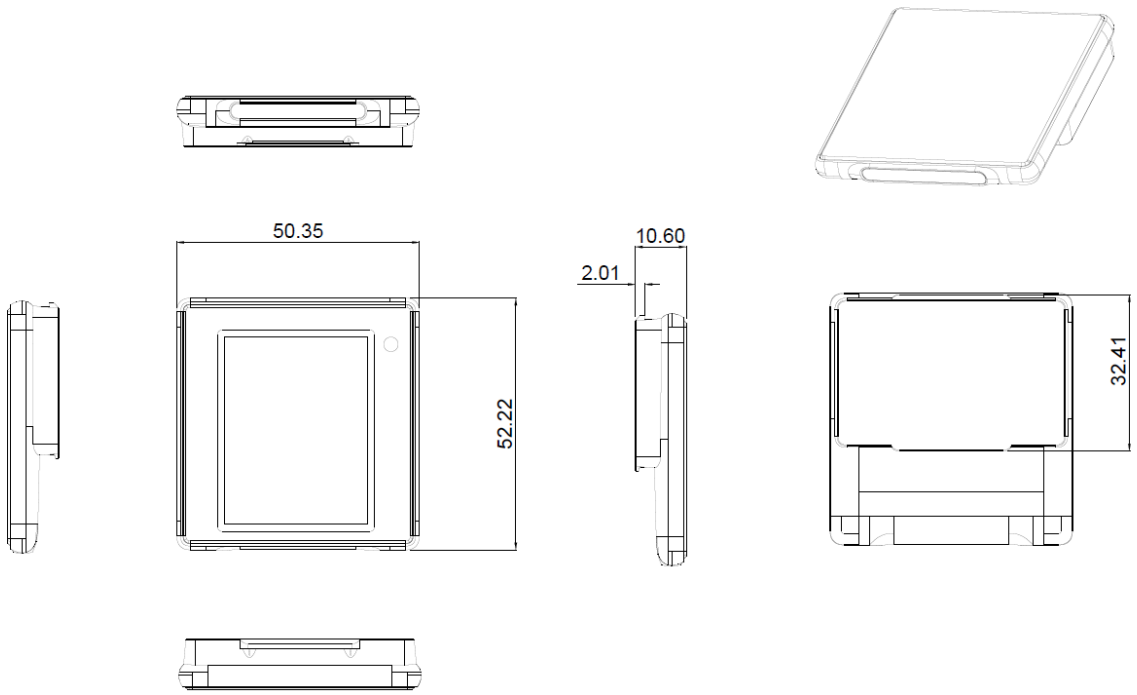


**Figure 2-42.0” dimension**

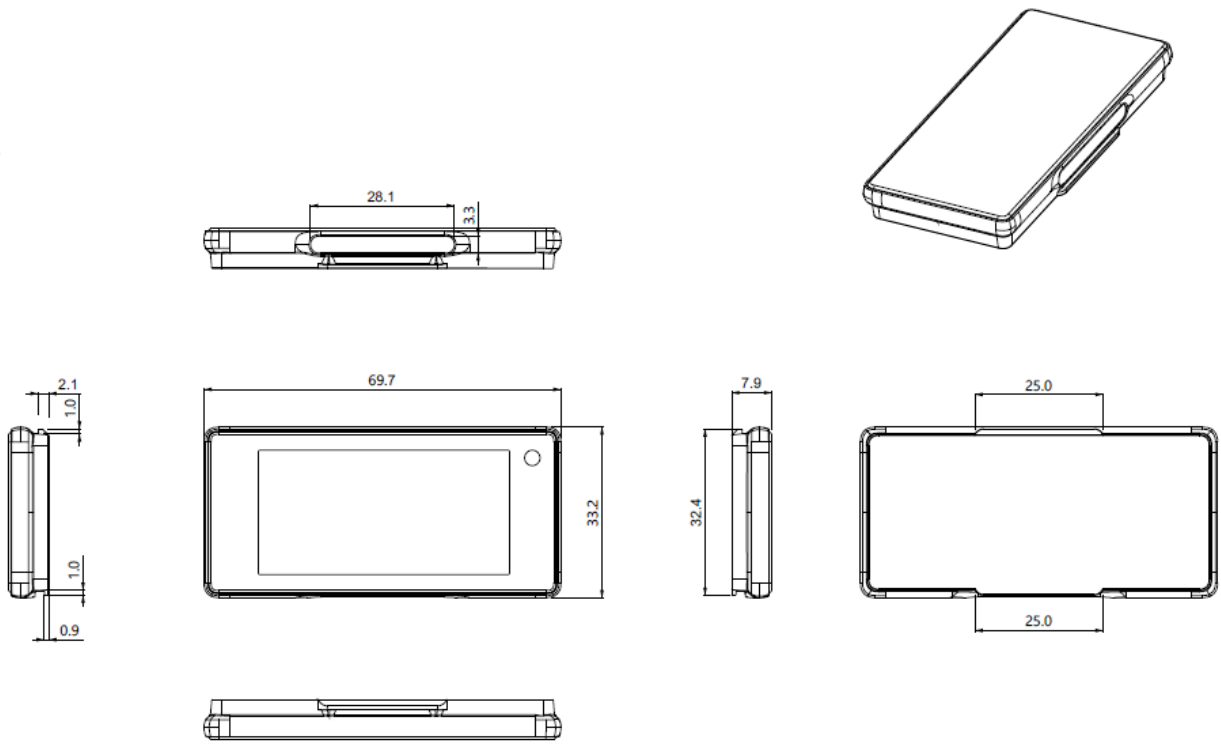


**Figure 2-5 2.13” dimension**

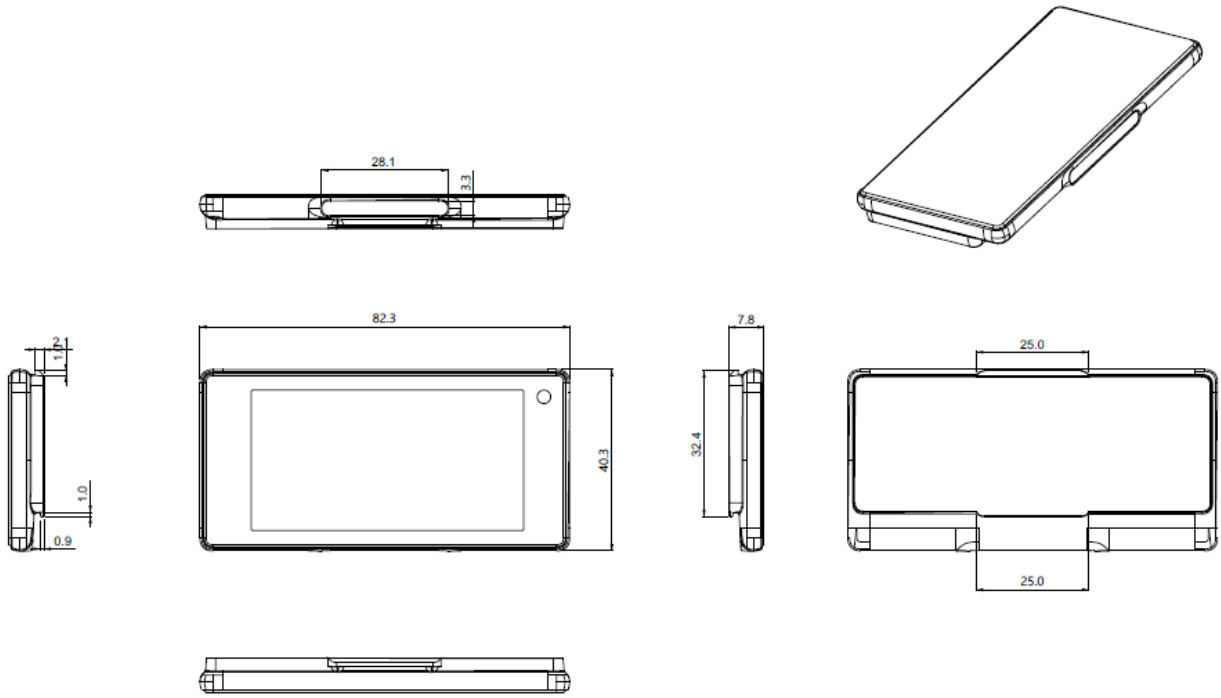


**Figure 2-62.66”dimension**

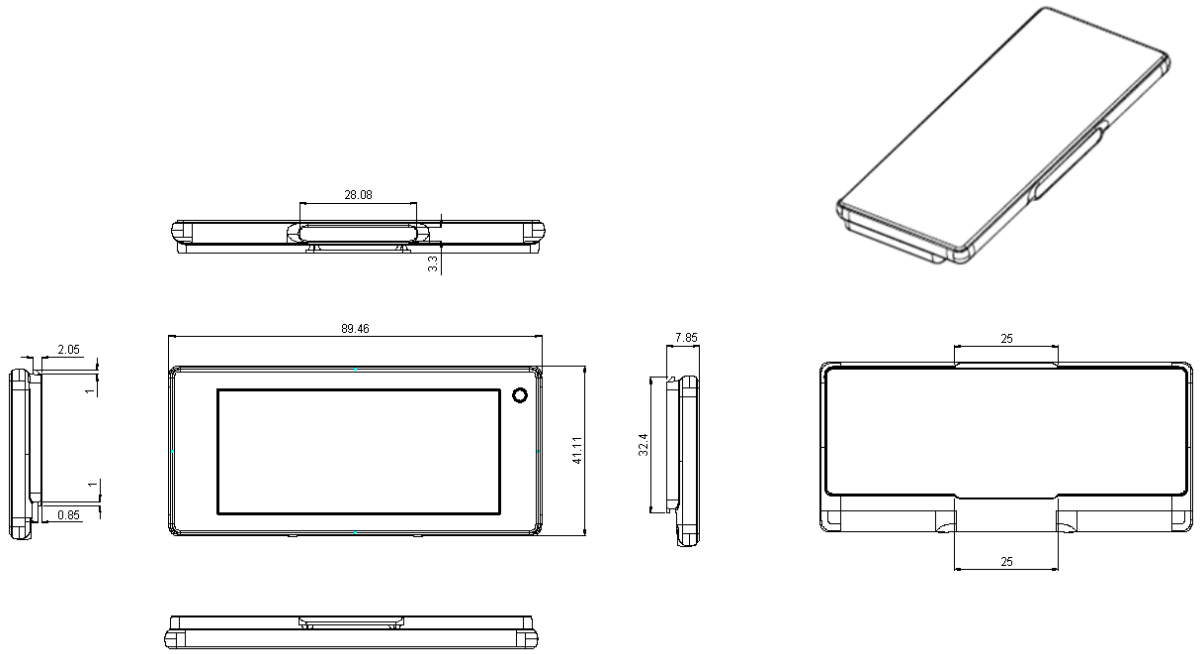


**Figure 2-72.9”dimension**

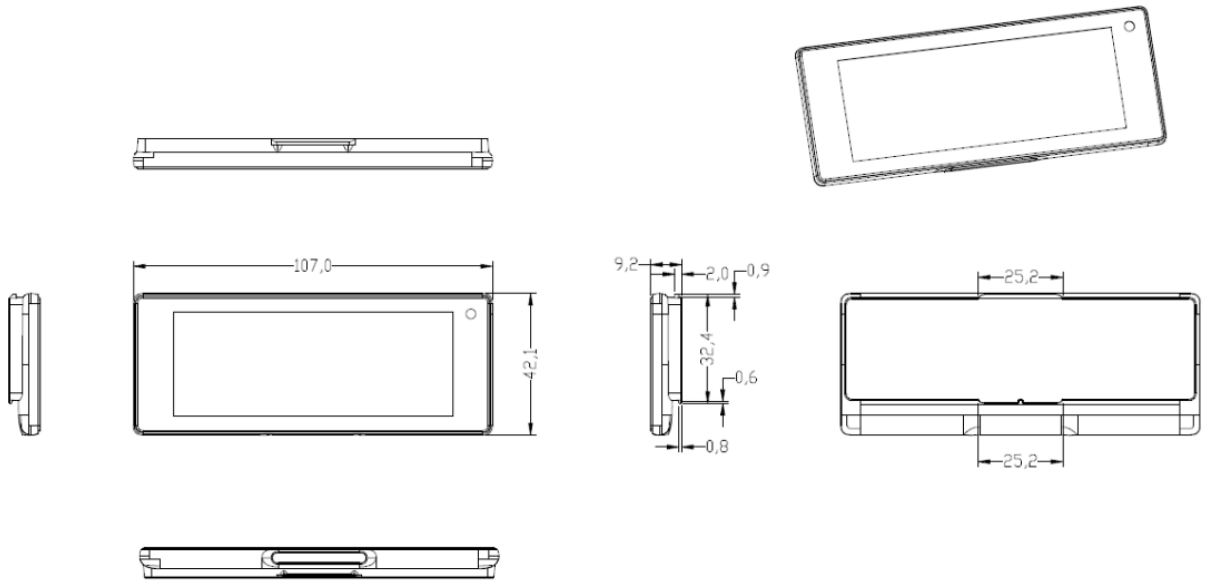


**Figure 2-83.46” dimension**

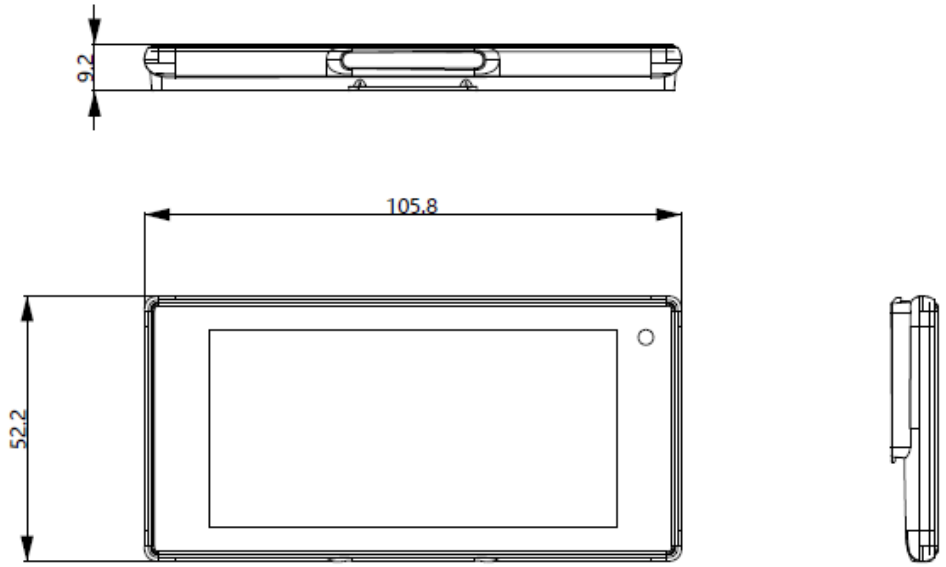


**Figure 2-93.5” dimension**

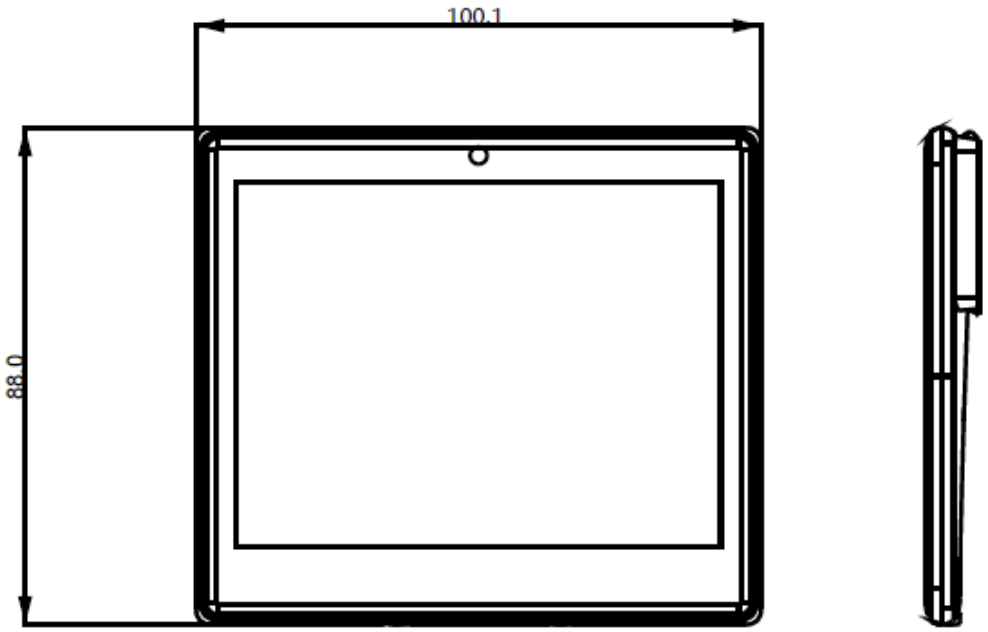


**Figure 2-10 4.2” dimension**

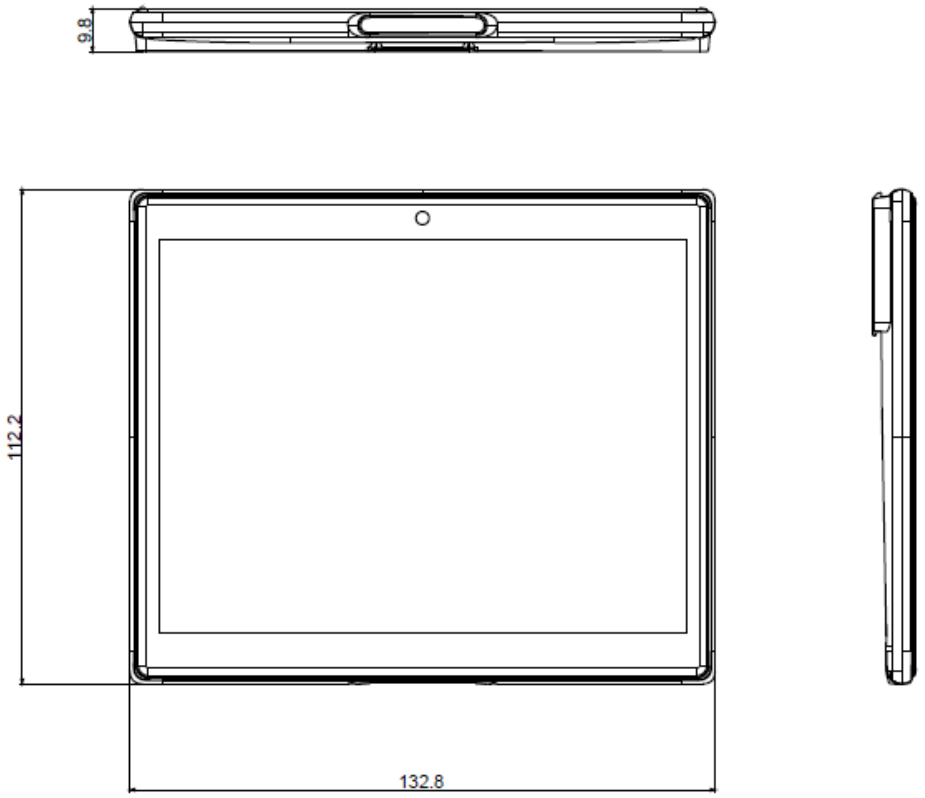


**Figure 2-111 5.83” dimension**

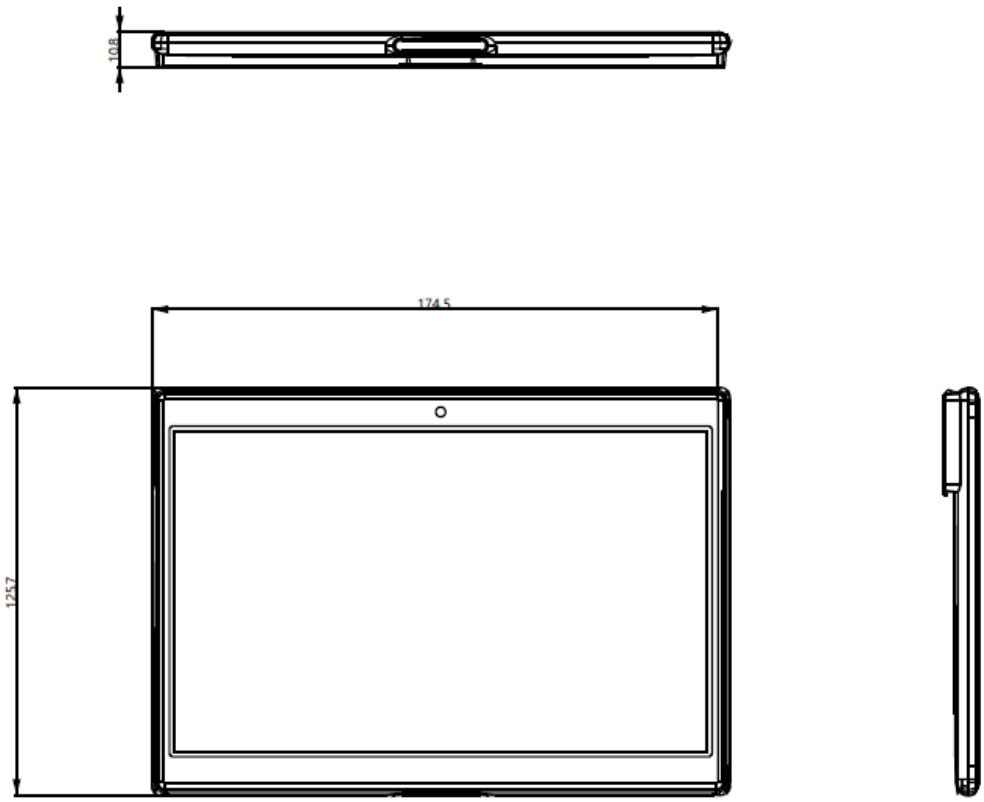


**Figure 2-127.5”dimension**

# 3 Hardware performance

This chapter consists of:

- *Specifications*
- *Identifying your ESLs*
- *Product nameplate*

## 3.1 Specifications

*Table 3-1*lists the Nebular specifications.

**Table 3-1Nebular specifications**

| Name | 1.54” | 2.0” | 2.13” | 2.13” Freezer | 2.66” | 2.66” Freezer | 2.9” | 3.46” | 3.5” | 3.5” Freezer | 4.2” | 5.83” | 7.5” |
|---|---|---|---|---|---|---|---|---|---|---|---|---|---|
| **Dimensions (mm*mm*mm)** | 46.7*35.8*10.0 | 50.35*52.22*10.6 | 69.7*33.2*7.8 | 69.7*33.2*7.8 | 82.3*40.3*7.8 | 82.3*40.3*7.8 | 89.5*41.1*7.8 | 107.0*42.2*9.2 | 105.8*52.0*9.2 | 105.8*52.0*9.2 | 100.1*88.0*9.5 | 132.8*112.2*9.8 | 178.1*125.7*10.8 |
| **Active display area (mm*mm)** | 27.0*27.0 | 29.0*38.2 | 48.6*23.7 | 48.6*23.7 | 60.1*30.7 | 60.1*30.7 | 67.6*29.6 | 82.6*30.3 | 79.7*38.2 | 79.7*38.2 | 84.8*63.6 | 118.8*88.2 | 163.2*97.9 |
| **Size (inch)** | 1.5 | 1.9 | 2.13 | 2.13 | 2.66 | 2.66 | 2.9 | 3.46 | 3.5 | 3.5 | 4.2 | 5.83 | 7.5 |
| **Resolution (pixel)**[3-1] | 200*200 | 152*200 | 250*122 | 250*122 | 296*152 | 296*152 | 296*128 | 176*480 | 384*184 | 384*184 | 400*300 | 648*480 | 800*480 |
| **DPI**[3-1] | 188 | 133 | 131 | 131 | 125 | 125 | 112 | 148 | 123 | 123 | 120 | 138 | 126 |
| **Display color** | BWR (only BW display for freezer ESLs) | | | | | | | | | | | | |
| **Viewing angle** | Nearly 180 degrees | | | | | | | | | | | | |
| **Battery life**[3-2] | Up to 10 or15 years | | | | | | | | | | | | |
| **Page switch** | 8 pages | | | | | | | | | | | | |
| **Protection level** | IP68 | | | | | | | | | | | | |
| **Operating temperature[3-3]** | 0 ~ 40 | 0 ~ 40 | 0 ~ 40 | -25 ~ 0 | 0 ~ 40 | -25 ~ 0 | 0 ~ 40 | 0 ~ 40 | 0 ~ 40 | -25 ~ 0 | 0 ~ 40 | 0 ~ 40 | 0 ~ 40 |
| **Storage temperature[3-3]** | 0 ~ 40 | 0 ~ 40 | 0 ~ 40 | -25 ~ 30 | 0 ~ 40 | -25 ~ 30 | 0 ~ 40 | 0 ~ 40 | 0 ~ 40 | -25 ~ 30 | 0 ~ 40 | 0 ~ 40 | 0 ~ 40 |

Hanshow Confidential

| Name | 1.54” | 2.0” | 2.13” | 2.13” Freezer | 2.66” | 2.66” Freezer | 2.9” | 3.46” | 3.5” | 3.5” Freezer | 4.2” | 5.83” | 7.5” |
|---|---|---|---|---|---|---|---|---|---|---|---|---|---|
| Humidity (%RH) | 45 ~ 65 | | | | | | | | | | | | |

**Note:**

- [3-1]: The resolution and DPI might be subject to slight variations.
- [3-2]: Battery life is calculated based onthe following scenarios:The battery life is up to 10 yearsif updated once a day for the following sizes:1.54”/3.46”/3.5”/2.13” Freezer/2.66” Freezer/3.5” Freezer.The life is up to15 yearsif updated twice a day for the following sizes:2.0”/2.13”/2.66”/2.9”/4.2”/5.83”/7.5”.
- [3-3]: Room-temperature ESLs operate within 0°C ~ 40°C, however temperatures below 10°Cmight impact the ESL lifespan. Freezer ESLs operate within -25°C ~ 0°C.

Hanshow Confidential

## 3.2 Identifying your ESLs

You can identify your ESLs from the followingNebular naming rules:

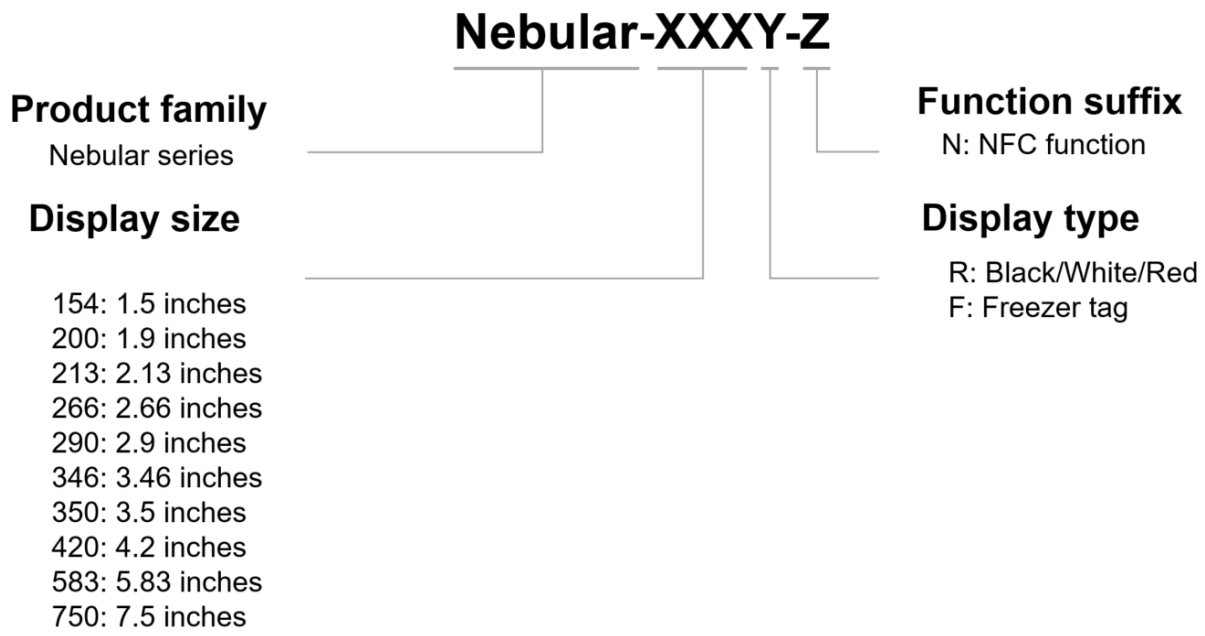


**Figure 3-1Naming rules for Nebular series**

## 3.3 Product nameplate

TakingNebular-266R-N as an example, *Figure 3-2* shows the nameplateofNebular.

**Figure 3-2Nameplate of Nebular**

**Note:** Each ESL has a unique S/N number.The above is for reference only, actual label information might vary.

# 4 Packaging and accessories

This chapter describes Nebular series' packaging and required accessories.

## 4.1 Packaging

Nebular family packaging and the specific ESLquantity is shown in *Figure 4-1*.

| 屏幕尺寸（inch） | 内箱价签数量M (pcs) | 内箱数量N (Box) | 整箱价签数量 (pcs) | 内箱尺寸(mm) | 外箱尺寸(mm) |
|---|---|---|---|---|---|
| 1.54 | 30 | 10 | 300 | 354*57*46 | 383*247*131 |
| 2.0 | 30 | 12 | 360 | 372*60*60 | 389*378*155 |
| 2.13 | 35 | 8 | 280 | 333*80*44 | 367*193*177 |
| 2.66 | 35 | 8 | 280 | 333*93*51 | 367*389*119 |
| 2.9 | 35 | 8 | 280 | 333*100*51 | 367*221*217 |
| 3.46 | 20 | 7 | 140 | 228*117*51 | 371*245*151 |
| 3.5 | 20 | 6 | 120 | 228*116*61 | 378*245*150 |
| 4.2 | 20 | 5 | 100 | 372*127*118 | 404*680*160 |
| 5.83 | 20 | 5 | 100 | 381*159*146 | 840*410*185 |
| 7.5 | 2 | 5 | 10 | - | 270*216*165 |

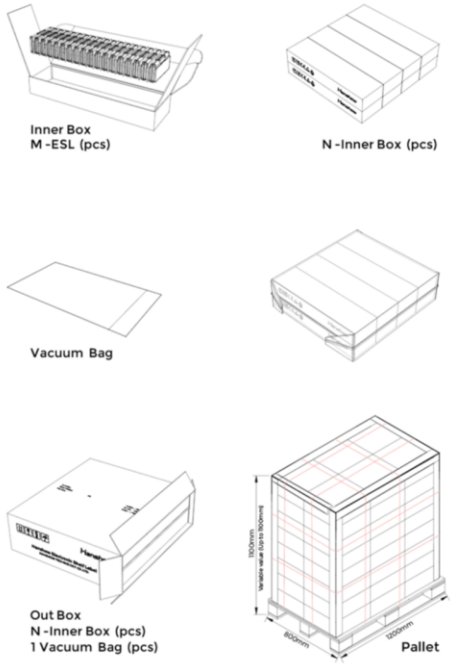


**Figure 4-1Nebular familypackaging**

## 4.2 Product accessories

Common accessories of Nebular series are shown in *Table 4-1*.

**Table 4-1Common accessories of Nebular series**

| | |
|---|---|
| Rail | 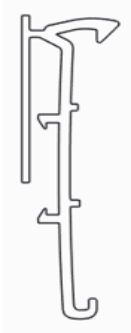 |
| Table stand | 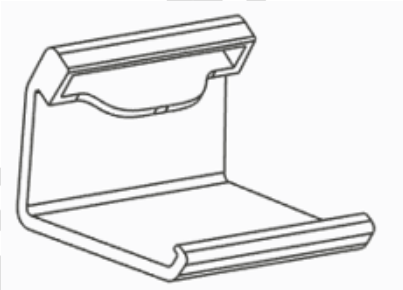 |
| T-hook | 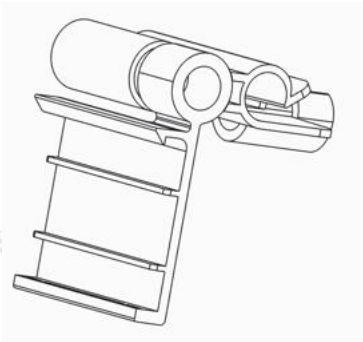 |
| Basket clip | 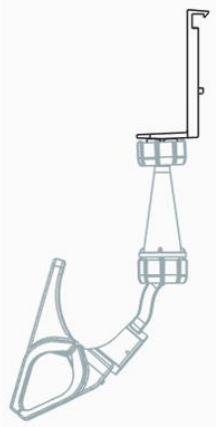 |

Hanshow Confidential

# 5 Application scenarios

Nebular series are available to various zones and shelves of hypermarket, supermarket and retail stores.The ESLs are applicable to areas with different fixtures:

- Shelves
- Hooks
- Fences
- Tables

Hanshow Confidential

# 6 Precautions

During transportation and usage of Nebular series, please note the following precautions.

## 6.1 Transportation considerations

Avoid the following considerations during transport:

- Waterleakage or heavy moisture.
- Heavy stacking.
- High heat conditions above 40°C.

## 6.2 Precautions for use

Follow the precautions:

- The room-temperature ESLs operate best in normal operating and storage environment,0°C ~ 40°C, 45% ~ 65%RH.
- The freezer ESLs operate best in normal operating, -25°C~ 0°C, 45% ~ 65%RHand storage environment, -25°C~ 30°C, 45% ~ 65%RH.
- Keep ESLs within the specified temperature range, otherwiseESL screensmight be damaged and the battery life might be shortened.
- The output capacity will degrade at low temperature.
- Frequent communications or updates might shorten battery life during the use.
- Avoid dropping or tossing ESLs.
- Do not disassemble ESLs without permission.
- Do not disassemble ESL batteries.
- Do not scratch ESL bodies with sharp objects.
- UseNebular dedicated disassembly tools when disassembling.
- The mineralsubstances inrainwater, moisture or liquids mightcorrode the electronic circuit. Avoid water on the product as much as possible.
- Regularly clean the screen.
- Promptly remove cosmetics, perfume and other dirty on ESLs to avoid screen, case,or lens damaged.
- Avoid direct contact with chemical detergent.

Hanshow Confidential


Hanshow Copyright Reserved ©
Hanshow Technology Co., Ltd.

- Avoid direct sunlight or incandescent light on ESLs.
- Do not install ESLs in a strong magnetic environment.
- Do not place ESLs near or in a fire.
- Do not place ESLs near kitchen appliances such as a stove, a microwave oven.
- ESLs communications might be limited or affected by other wireless communication systemsthat share the 2.4GHz frequency-band, such as Wi-Fi, Bluetooth,or Zigbee.

Hanshow Confidential


Hanshow Copyright Reserved ©
Hanshow Technology Co., Ltd.

# 7 FCC ID warning

## 7.1 Warning for nameplate

This device complies with Part 15 of the FCC Rules. Operation is subject to the following two conditions:

1. This device may not cause harmful interference, and
2. This device must accept any interference received, including interference that may cause undesired operation.

## 7.2 Warning for product manual

Changes or modifications not expressly approved by the party responsible for compliance could void the user's authority to operate the equipment.

This equipment has been tested and found to comply with the limits for a Class B digital device, pursuant to Part 15 of the FCC Rules. These limits are designed to provide reasonable protection against harmful interference in a residential installation. This equipment generates, uses and can radiate radio frequency energy and, if not installed and used in accordance with the instructions, may cause harmful interference to radio communications. However, there is no guarantee that interference will not occur in a particular installation. If this equipment does cause harmful interference to radio or television reception, which can be determined by turning the equipment off and on, the user is encouraged to try to correct the interference by one or more of the following measures:

- Reorient or relocate the receiving antenna.
- Increase the separation between the equipment and receiver.
- Connect the equipment into an outlet on a circuit different from that to which the receiver is connected.
- Consult the dealer or an experienced radio/TV technician for help.

## 7.3 portable device statements

The device has been evaluated to meet general RF exposure requirement. The device can be used in portable exposure condition without restriction.

Hanshow Confidential


Hanshow Copyright Reserved ©
Hanshow Technology Co., Ltd.

# 8 IC statement

This device complies with Industry Canada's licence-exempt RSSs. Operation is subject to the following two conditions:

(1) This device may not cause interference; and(2) This device must accept any interference, including interference that may cause undesired operation of the device.

Le présentappareilestconforme aux CNR d'Industrie Canada applicables aux appareils

radio exempts de licence. L'exploitationestautorisée aux deux conditions suivantes :

(1) l'appareil ne doit pas produire de brouillage, et (2) l'utilisateur de l'appareildoit accepter tout brouillageradioélectriquesubi, mêmesi le brouillageest susceptible d'encompromettre le fonctionnement

Hanshow Confidential

# 9 UKCA statement

All products of the Nebular series comply with UK Conformity Assessed (UKCA) standards.Nebular products include 1.54”, 2.0”, 2.13”, 2.66”, 2.9”, 3.46”, 3.5”, 4.2”,5.83”,7.5”, 2.13” Freezer, 2.66” Freezer, and 3.5” Freezer.

**Figure 9-1UKCAmarking**

Hanshow Confidential


Hanshow Copyright Reserved ©
Hanshow Technology Co., Ltd.