Hanshow Nebular Ultra Series Product Manual

V1.0.1
HS-ESL-EPDN002

For more information, visit our website at: *https://www.hanshow.com*

STATEMENT

This document and all its contents contained remain the proprietary material of Hanshow Technology Co., Ltd. (Hanshow) and are protected by Chinese laws and applicable international conventions on copyrights. Any reproduction, transmission, disclosure, revision, modification or use otherwise of this document or the whole or part of its contents, in whatever form and by whatever means, is not permitted without prior express written authorization from Hanshow. Offenders will be liable for any and all damages caused by their offence hereof and will be subject to all remedies that Hanshow is entitled to seek under applicable laws.

⚠ **NOTICE**

Your purchase of products, services, or features should be governed by the commercial contract and terms of Hanshow Technology Co., Ltd., and all or part of the products, services, or features described in this document may not be within the scope of your purchase or use. Unless otherwise provided in the contract, Hanshow Technology Co., Ltd. makes no explicit or implied representations or warranties concerning the content of this document.

Due to product upgrades or other reasons, the content of this document will be updated periodically. Unless otherwise agreed upon, this document serves only as a usage guide, and all statements, information, and recommendations contained herein do not constitute any explicit or implied warranty.

Hanshow Copyright Reserved ©
Hanshow Technology Co., Ltd.

ABOUT THE MANUAL

This document describes Nebular Ultra series, including features, specification, package, and precautions.
Please read this manual carefully before using the device, and retain it for subsequent use or for the next owner. If the instructions contained in this manual are insufficient to resolve issues that occur during device operation or maintenance, please contact Hanshow Technical Customer Service Center (China: 400-0365-305; Benelux: +800-808-36000; France: 0800-90-2530; Germany/Poland: +800-836-86836; USA: 001-866-9570989; Australia: 0061-1800-953008) directly, we will provide you with multi-channel technical services.

TARGET USERS

This document provides engineers with the necessary data and related guidelines for Nebular Ultra series. Users have to master the basic knowledge on communication and network and so on. This manual is applicable to the below engineers:

- Testing Engineer
- Technical Support Engineer
- After Sales Engineer
- Installation Engineer

Hanshow Copyright Reserved ©
Hanshow Technology Co., Ltd.

SYMBOL DESCRIPTION

Icon	Description
⚠	Information indicated with this icon should be paid special attention and attached great importance by the reader.
🕮	Information indicated with this icon is the explanation on the formal text for the readers to comprehend the text better.
[X-X]	It means special noun definition is provided here.

EXPLANATION OF TERMS

Acronym	Expanded form	Description
PriSmart	PriSmart Smart Retail System	Manage all store product data and issue price update command, as well as support multi-store management.
ESL-Working	ESL-Working System	Manage all the APs and ESLs in store, and ESL-Working 3.0 and above supports multi-store management.
ESL Controller	ESL Controller	Also called AP that is used for data interaction between ESL-Working and ESL Controller.
ESL	Electronic Shelf Label	Used for displaying product information like promotion information, price, and grade.

Hanshow Copyright Reserved ©
Hanshow Technology Co., Ltd.

Table of Contents

1 Overview....1
1.1 System architecture....1
1.2 Features....2
2 Product view....3
2.1 Product appearance....3
2.2 Dimensions....5
3 Hardware performance....7
3.1 Specifications....7
3.2 Product nameplate....8
4 Packaging and accessories....8
4.1 Product accessories....8
5 Application scenarios....10
6 Precautions....11
6.1 Transportation considerations....11
6.2 Precautions for use....11
7 FCC ID warning....12
7.1 Warning for nameplate....12
7.2 Warning for product manual....12
7.3 portable device statements....12
8 IC statement....13
9 EU Regulations....14

Hanshow Copyright Reserved ©
Hanshow Technology Co., Ltd.

1 Overview

The Nebular Ultra Series is Hanshow's latest generation of Electronic Shelf Labels (ESLs). Featuring advanced E-ink displays, they enable seamless page switching, flashing, pricing, and more through 2.4GHz wireless communication. With their ultra-thin design, extended lifespan, and high-definition visual performance, the Nebular Ultra Series is widely adopted across traditional retail, new retail formats, department stores, fashion outlets, pharmacies, as well as the culture and entertainment sectors.

1.1 System architecture

Hanshow ESL system includes ESLs, ESL Controller, ESL-Working, PriSmart/ShopWeb, Database, Integration server, CloudMonitor and Handheld Terminal (PDA), as shown in *Figure 1-1*. Specifically, the ESLs are used for electronically displaying product information such as name and price, and services available for customers.

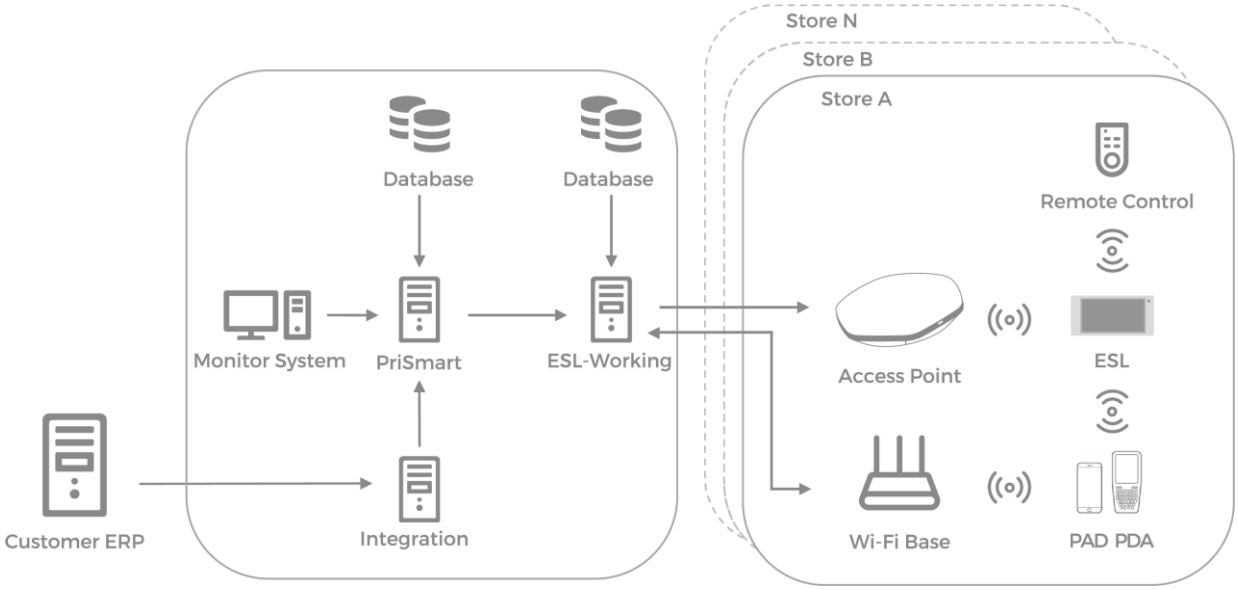

Figure 1-1 Hanshow ESL system architecture

Hanshow Copyright Reserved ©
Hanshow Technology Co., Ltd.

1.2 Features

The features of Nebular Ultra series are as follows:

- Nebular Ultra ESLs come in 8 ESL sizes: 1.54”, 2.0”, 2.13”, 2.66”, 2.9”, 3.46”, 3.5”, 4.2”.
- Display colors include: Black, White, Red and Yellow (Black-White display for freezer ESLs).
- Operating frequency band: 2,402MHz ~ 2,480MHz.
- IP68 waterproof and dustproof design.
- Built-in LED indicator: 7-color display assists in product location, promotion reminder, out-of-stock reminder, and low power reminder.
- Embedded NFC chip: Supports NFC function. NFC response distance is 10mm.
- The freezer ESLs come in three sizes: 2.13”, 2.66” and 3.5” that function in temperature -25°C ~ 0°C.
- Nebular Ultra ESLs support multiple functions, including binding/unbinding, updating, instant flashing, multi-page storage, page switching, geolocation, temperature collection, NFC function and so on.
- Supports AES-128 encryption.
- Supports OTA (Over-The-Air) upgrade.

Hanshow Copyright Reserved ©
Hanshow Technology Co., Ltd.

2 Product view

This chapter describes Nebular Ultra series' appearance and composition.

2.1 Product appearance

Figure 2-1 shows Nebular Ultra family.

Figure 2-1 Nebular Ultra family

Hanshow Copyright Reserved ©
Hanshow Technology Co., Ltd.

Each section of Nebular Ultra and its relative description is shown in

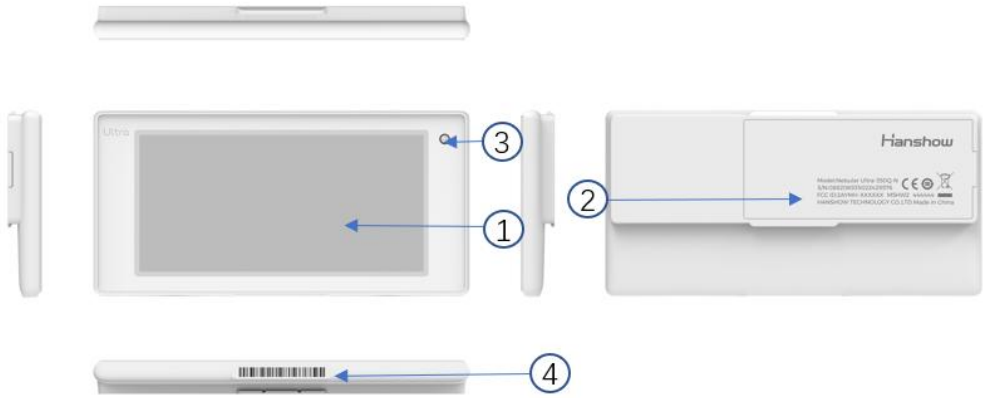

Figure 2-2 and *Table 2-1*.

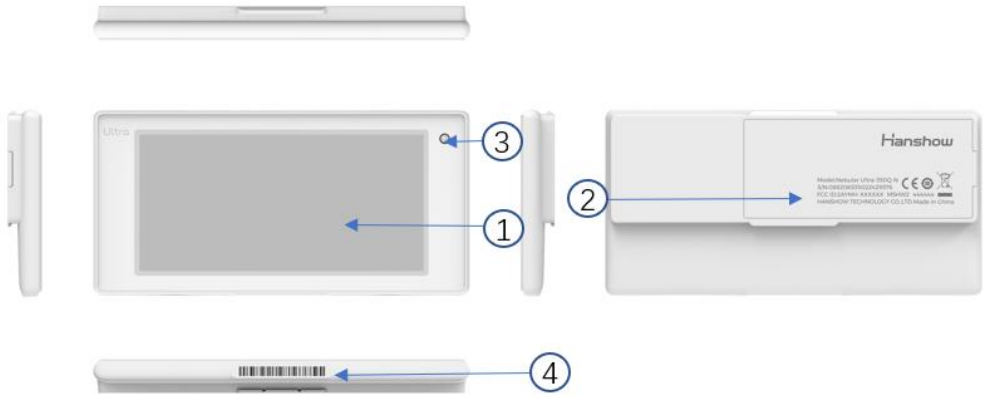

Figure 2-2 Key area of Nebular Ultra

Table 2-1 Each area description of Nebular Ultra

No.	Name	Description
1	Display area	Supports BWRY display on E-ink screen. ● Display text, images, barcode, QR code and others. ● Product information display such as name, price, origin, unit, grade, phone number, barcode, and QR code. Supports customizable display position and font size. ● Supports 8-page storage and page switch functionality.
2	Nameplate	Product information mark, including model, S/N, and certifications such as CE.
3	LED indicator	Supports 7-color flashing.
4	Barcode area	18-digit barcode used for product binding and maintenance.

Hanshow Copyright Reserved ©
Hanshow Technology Co., Ltd.

2.2 Dimensions

This section covers the dimensions of Nebular Ultra series.

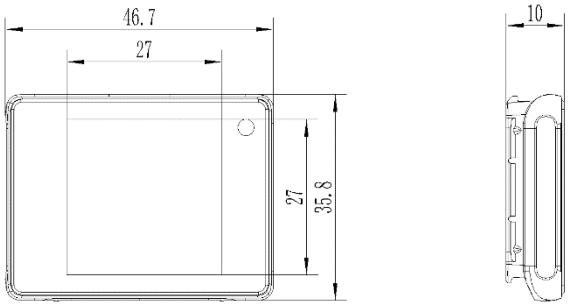

Figure 2-3 1.54” dimension

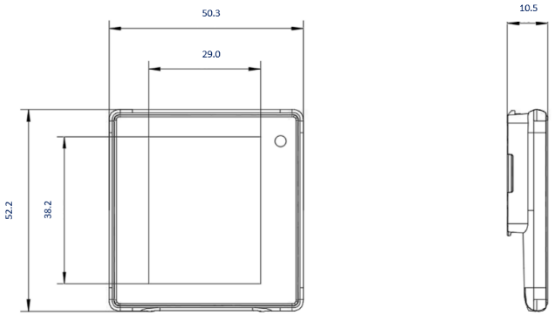

Figure 2-4 2.0” dimension

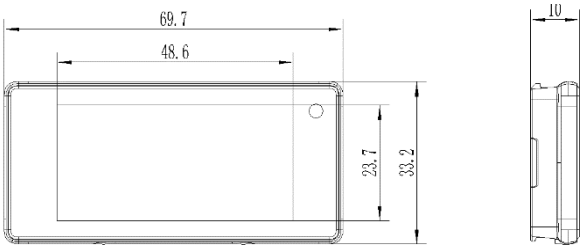

Figure 2-5 2.13” dimension

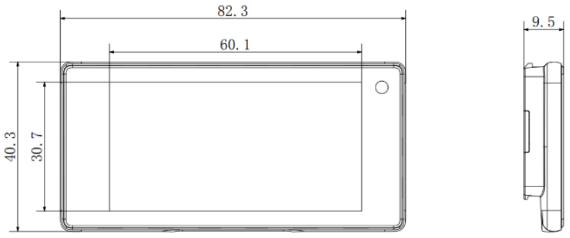

Figure 2-6 2.66” dimension

Hanshow Copyright Reserved ©
Hanshow Technology Co., Ltd.

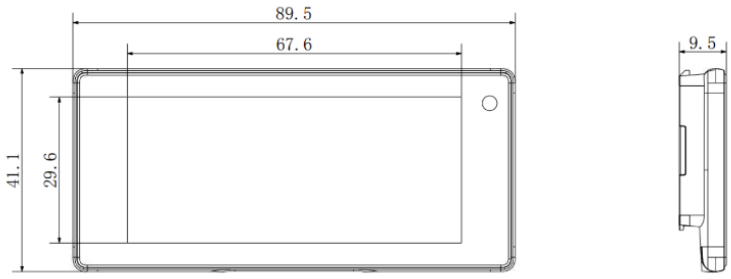

Figure 2-7 2.9” dimension

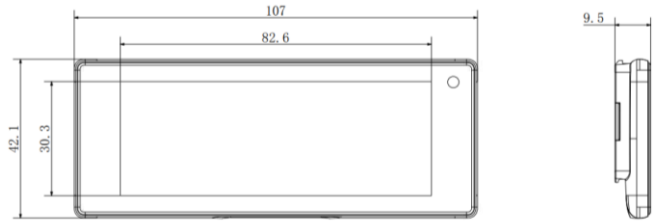

Figure 2-8 3.46” dimension

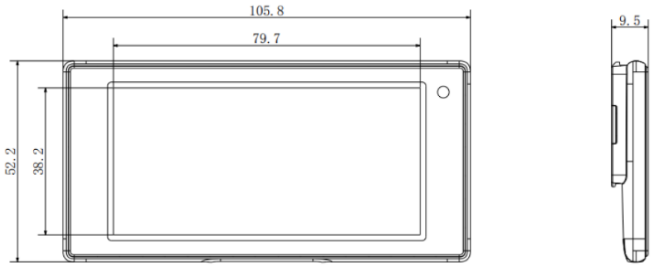

Figure 2-9 3.5” dimension

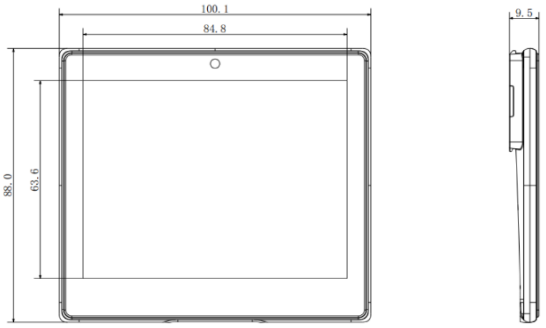

Figure 2-10 4.2” dimension

Hanshow Copyright Reserved ©
Hanshow Technology Co., Ltd.

3 Hardware performance

3.1 Specifications

Table 3-1 lists the Nebular Ultra specifications.

Table 3-1 Nebular Ultra specifications

Name	1.54”	2.0”	2.13”	2.66”	2.9”	3.46”	3.5”	2.13” Freezer	2.66” Freezer	3.5” Freezer	4.2”
Dimensions (mm*mm*mm)	46.7*35.9*10.1	50.3*52.2*10.5	69.7*33.2*10.1	82.3*40.3*9.5	89.5*41.1*9.5	107.0*42.1*9.5	105.8*52.2*9.5	69.7*33.2*10.1	82.3*40.3*9.5	105.8*52.2*9.5	100.1*88.0*9.5
Active display area (mm*mm)	27.0*27.0	29.0*38.2	48.6*23.7	60.1*30.7	67.6*29.6	82.6*30.3	79.7*38.2	48.6*23.7	60.1*30.7	79.7*38.2	84.8*63.6
Size (inch)	1.5	1.9	2.13	2.66	2.9	3.46	3.5	2.13	2.66	3.5	4.2
Resolution (pixel)[3-1]	200*200	152*200	250*122	296*152	296*128	176*480	384*184	250*122	296*152	384*184	400*300
DPI[3-1]	188	133	131	125	112	148	123	131	125	123	120
Display color	Black, White, Red, Yellow (only BW display for freezer ESLs)										
Viewing angle	Nearly 180 degrees										
Battery life[3-2]	Up to 10 years										
Page switch	8 pages										
Protection level	IP68										
Operating temperature[3-3]	0 ~ 40	0 ~ 40	0 ~ 40	0 ~ 40	0 ~ 40	0 ~ 40	0 ~ 40	-25 ~ 0	-25 ~ 0	-25 ~ 0	0 ~ 40
Storage temperature[3-3]	0 ~ 40	0 ~ 40	0 ~ 40	0 ~ 40	0 ~ 40	0 ~ 40	0 ~ 40	-25 ~ 30	-25 ~ 30	-25 ~ 30	0 ~ 40
Humidity (%RH)	45 ~ 65										

Note:

- [3-1]: The resolution and DPI might be subject to slight variations.
- [3-2]: Battery life is calculated based on the following scenarios: Room temperature (25°C) ESLs switch page twice a day; while freezer ESLs switch page once a day.
- [3-3]: Room-temperature ESLs operate within 0°C ~ 40°C, however, temperatures below 10°C might impact the ESL lifespan. Freezer ESLs operate within -25°C ~ 0°C.

Hanshow Copyright Reserved ©
Hanshow Technology Co., Ltd.

3.2 Product nameplate

Taking Nebular Ultra 350Q-N as an example, *Figure 3-1* shows the nameplate of Nebular Ultra.

Figure 3-1 Nameplate of Nebular Ultra

Note: Each ESL has a unique S/N number. The above is for reference only, actual label information might vary.

4 Packaging and accessories

This chapter describes Nebular Ultra series' packaging and required accessories.

4.1 Product accessories

Common accessories of Nebular Ultra series are shown in *Table 4-1*.

Hanshow Copyright Reserved ©
Hanshow Technology Co., Ltd.

Table 4-1 Common accessories of Nebular Ultra series

Rail	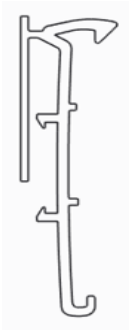
Table stand	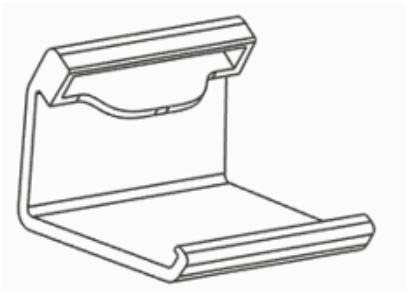
T-hook	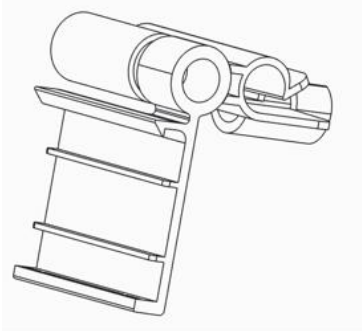
Basket clip	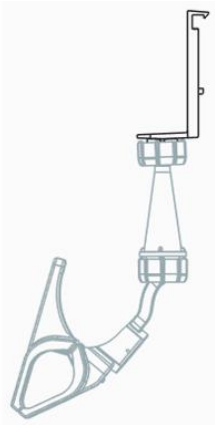

Hanshow Copyright Reserved ©
Hanshow Technology Co., Ltd.

5 Application scenarios

Nebular Ultra series are available to various zones and shelves of hypermarkets, supermarket and retail stores. The ESLs are applicable to areas with different fixtures:

- Shelves
- Hooks
- Fences
- Tables

Hanshow Copyright Reserved ©
Hanshow Technology Co., Ltd.

6 Precautions

During transportation and usage of the Nebular Ultra series, please note the following precautions.

6.1 Transportation considerations

Avoid the following considerations during transport:

- Water leakage or heavy moisture.
- Heavy stacking.
- High heat conditions above 40°C.

6.2 Precautions for use

Follow the precautions:

- The room-temperature ESLs operate best in normal operating and storage environment, 0°C ~ 40°C, 45% ~ 65%RH.
- The freezer ESLs operate best in normal operating, -25°C ~ 0°C, 45% ~ 65%RH and storage environment, -25°C ~ 30°C, 45% ~ 65%RH.
- Keep ESLs within the specified temperature range, otherwise ESL screens might be damaged and the battery life might be shortened.
- The output capacity will degrade at low temperature.
- Frequent communications or updates might shorten battery life during the use.
- Avoid dropping or tossing ESLs.
- Do not disassemble ESLs without permission.
- Do not disassemble ESL batteries.
- Do not scratch ESL bodies with sharp objects.
- Use Nebular Ultra dedicated disassembly tools when disassembling.
- The mineral substances in rainwater, moisture or liquids might corrode the electronic circuit. Avoid water on the product as much as possible.
- Regularly clean the screen.
- Promptly remove cosmetics, perfume and other dirty on ESLs to avoid screen, case, or lens damaged.
- Avoid direct contact with chemical detergent.
- Avoid direct sunlight or incandescent light on ESLs.
- Do not install ESLs in a strong magnetic environment.
- Do not place ESLs near or in a fire.
- Do not place ESLs near kitchen appliances such as a stove, a microwave oven.

Hanshow Copyright Reserved ©
Hanshow Technology Co., Ltd.

- ESLs communications might be limited or affected by other wireless communication systems that share the 2.4GHz frequency-band, such as Wi-Fi, Bluetooth, or Zigbee.

7 FCC ID warning

7.1 Warning for nameplate

This device complies with Part 15 of the FCC Rules. Operation is subject to the following two conditions:

1. This device may not cause harmful interference, and
2. This device must accept any interference received, including interference that may cause undesired operation.

7.2 Warning for product manual

Changes or modifications not expressly approved by the party responsible for compliance could void the user's authority to operate the equipment.
This equipment has been tested and found to comply with the limits for a Class B digital device, pursuant to Part 15 of the FCC Rules. These limits are designed to provide reasonable protection against harmful interference in a residential installation. This equipment generates, uses and can radiate radio frequency energy and, if not installed and used in accordance with the instructions, may cause harmful interference to radio communications. However, there is no guarantee that interference will not occur in a particular installation. If this equipment does cause harmful interference to radio or television reception, which can be determined by turning the equipment off and on, the user is encouraged to try to correct the interference by one or more of the following measures:

- Reorient or relocate the receiving antenna.
- Increase the separation between the equipment and the receiver.
- Connect the equipment to an outlet on a circuit different from that to which the receiver is connected.
- Consult the dealer or an experienced radio/TV technician for help.

7.3 FCC Radiation Exposure Statement

The device has been evaluated to meet general RF exposure requirements.
This equipment should be installed and operated with minimum distance of 20 cm between the radiator and your body.

Hanshow Copyright Reserved ©
Hanshow Technology Co., Ltd.

8 IC statement

This device complies with CAN ICES-003 (B)/NMB-003(B).
This device complies with Industry Canada licence-exempt RSS standard(s). Operation is subject to the following two conditions:
(1) this device may not cause harmful interference, and
(2) this device must accept any interference received, including interference that may cause undesired operation.
Cet appareil est conforme à la norme CAN ICES-003 (B)/NMB-003 (B).
Le présent appareil est conforme aux CNR d'Industrie Canada applicables aux appareils radio exempts de licence. L'exploitation est autorisée aux deux conditions suivantes :
(1) l'appareil ne doit pas produire de brouillage, et
(2) l'utilisateur de l'appareil doit accepter tout brouillage radioélectrique subi, même si le brouillage est susceptible d'en compromettre le fonctionnement.
This equipment complies with IC radiation exposure limits set forth for an uncontrolled environment. This equipment should be installed and operated with minimum distance of 20 cm between the radiator and your body. This transmitter must not be co-located or operating in conjunction with any other antenna or transmitter.
Cet équipement est conforme aux limites d’exposition aux rayonnements de la IC établies pour unenvironnement non contrôé. Cet équipement doit être installé et fonctionner à au moins 20cm de distance d’un radiateur ou de votre corps.

Hanshow Copyright Reserved ©
Hanshow Technology Co., Ltd.

9 EU Regulations

Frequency Bands and Power:
SRD 2.4 GHz 2402MHz-2480MHz:10dBm
Bluetooth: 20 dBm
NFC: 13.56 MHz< 42 dBuA/m at 10m

WEEE:

Special precautions must be taken to safely dispose of this product. This marking indicates that this product may not be discarded with other household waste in the EU.
To prevent harm to the environment or human health from inappropriate waste disposal, and to promote sustainable reuse of material resources, please recycle responsibly.
To safely recycle your device, please use return and collection systems or contact the retailer where the device was originally purchased.

Hanshow Copyright Reserved ©
Hanshow Technology Co., Ltd.