VIVOHOME

THANK YOU!

NOTE:

To continuously improve its products, VIVOHOME reserves the right to modify this information without prior notification.

For any questions regarding assembly, please watch the video on the product page or contact our customer service. Our customer service will gladly assist you with any additional questions, comments, or concerns.

Thank you for using VIVOHOME products in your home!

Thank You for Purchasing from

VIVOHOME

Made in China

VIVOHOME

HOW-TO

USER MANUAL

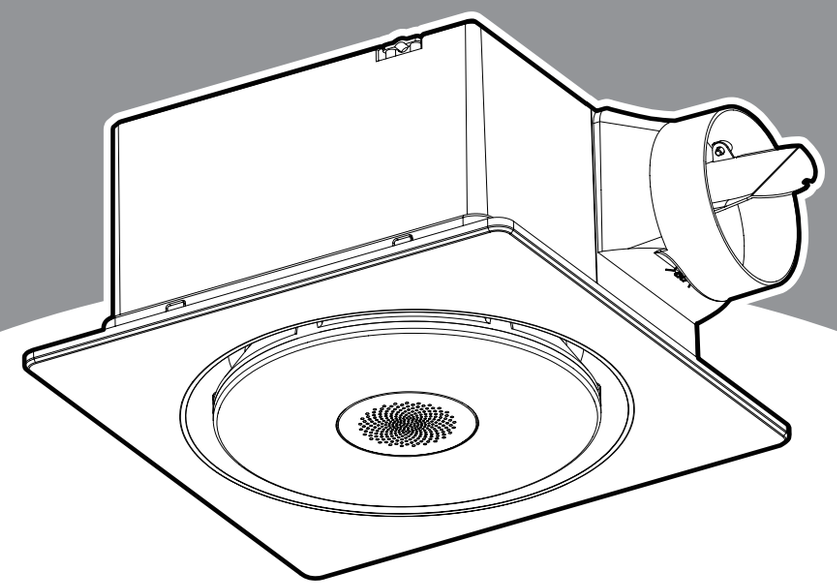

Bathroom Exhaust Fan with RGB Light

Assembly is EASY!

WE WANT YOU TO ENJOY LIFE AT HOME

GO TO THE PRODUCT LISTING PAGE
FOR AN INSTRUCTIONAL VIDEO!

VIVOHOME

HOW-TO

USER MANUAL

Bathroom Exhaust Fan with RGB Light

CONTENTS

Safety Information....1
Product Overview....3
Wiring Diagram....4
Installation Template....6
Installation and Operating Instructions....7
Ventilation Fan Operation....9
Troubleshooting....13
Caution....14
Maintenance....15
Warranty....15

SECTION A

Safety Information

Please read all instructions thoroughly before installation and use.

1. Ensure the power supply is 110-120V, 60Hz.
2. Do not install in areas where ambient temperature exceeds 104°F (40°C).
3. Do not bend, pinch, or damage the power cord.
4. Follow all local building and electrical codes, including NEC and OSHA regulations.
5. Disconnect power at the circuit breaker before performing any service.
6. Keep wiring away from sharp edges, oil, grease, and high-temperature surfaces.
7. Do not install where airflow may be obstructed.
8. Ensure proper air intake to support effective ventilation.
9. This product is approved for installation over a shower or bathtub when connected to a GFCI-protected circuit. The GFCI device or switch must be installed in a dry location, out of reach of users while bathing or showering.
10. Do not use the fan to exhaust flammable or explosive vapors.
11. Do not operate the fan with solid-state speed controls.
12. This unit is double insulated and does not require grounding.
13. Do not install in cooking areas. (See Fig. A)

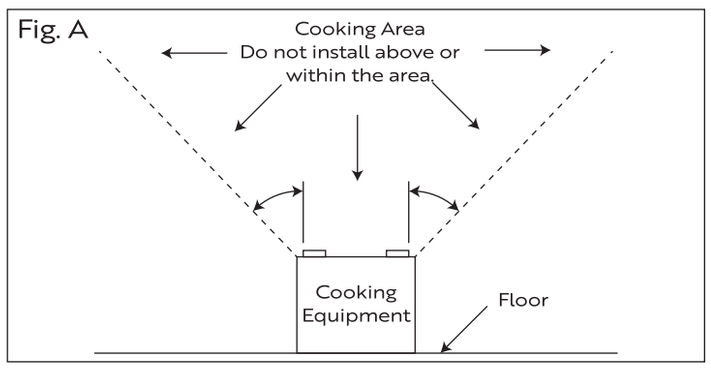

14. Exhaust air must be vented outdoors-not into walls, ceilings, attics, or garages.
15. Install the fan at least 7 feet (2.1 meters) above the floor.

WARNING: To reduce the risk of fire or electric shock, follow all safety precautions. Do not install the fan in restricted zones.

16. Use this product only as intended by the manufacturer. For any questions, pleasecontactcustomerservice.
17. Installation must be performed by a qualified technician in accordance with local codes and fire-rated construction requirements.

18. When used with gas-powered appliances, ensure proper airflow to prevent backdrafts. Follow NFPA and ASHRAE guidelines.
19. Do not install in ceilings with insulation values greater than R40.
20. During installation, take care not to damage hidden wires or plumbing.
21. Always lock or tag the power source before servicing. If locking is not possible, use a warning tag to indicate that the power should not be turned on.
22. For over-shower or bathtub installation, ensure the product is rated for that use and installed at least 1 meter (3.3 ft) from the water source (See Fig. B). The fan should be installed on the opposite side of the tub on the ceiling.
    It is acceptable for use over a bathtub or shower when connected to a GFCI-protected branch circuit (See Fig. B).

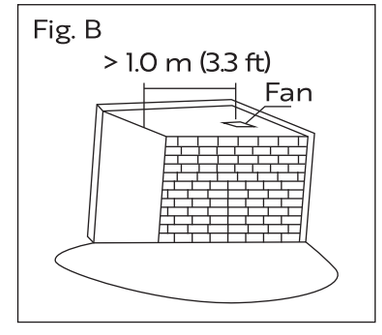

23. Do not connect to rigid metal conduit; use flexible conduit only.
24. Keep ductwork straight and minimize bends.
25. The diameter of the duct must not be reduced; it must match or exceed the fan outlet size.

❶ Decorative Panel 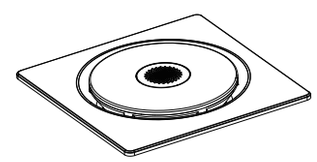	❷ Fan Housing 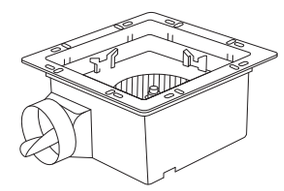	❸ Aluminum Foil Duct 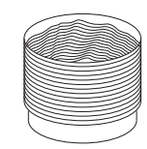
❹ Backdraft Damper 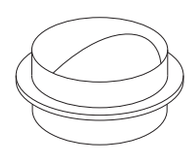	❺ Cutout Template 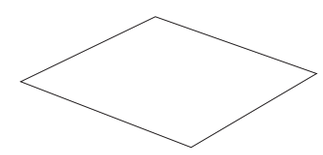	❻ Screws ×6 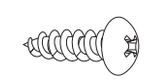
❼ Hose Clamps ×2 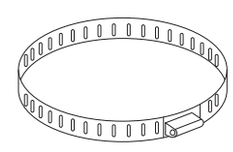	❽ Removable Duct Port	❾ Remote Control

SECTION B

Product Overview

Product Description

This ceiling-mounted exhaust fan is designed to remove moisture and odors from residential and commercial bathrooms effectively.

Key Features

- Easy to install
- High airflow capacity
- Ultra-quiet operation
- Compatible with residential and commercial environments
- Can be used in conjunction with HVAC systems

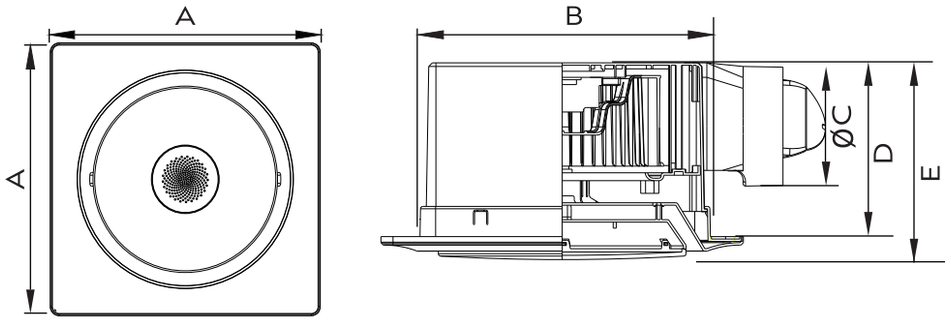

Unit: Inch

Size	A	B	ϕC	D	E
12″	11.8x11.8	10.2x10.2	ϕ4	5.7	6.5

SPECIFICATIONS

SKU	**VH1818**	Fans Power	**45W**
Motor Power	**45W**	Frequency	**50-60Hz**
Light Power	**15W**	Air Volume	**30-160 CFM**
Noise Level	**0.1-1-1.5 sone**	Airflow Output (CFM)	**30-180 CFM**
Voltage	**110V-120V**	Rotate Speed	**330-1745 RPM**

N Black L Red

SECTION C

Wiring Diagram

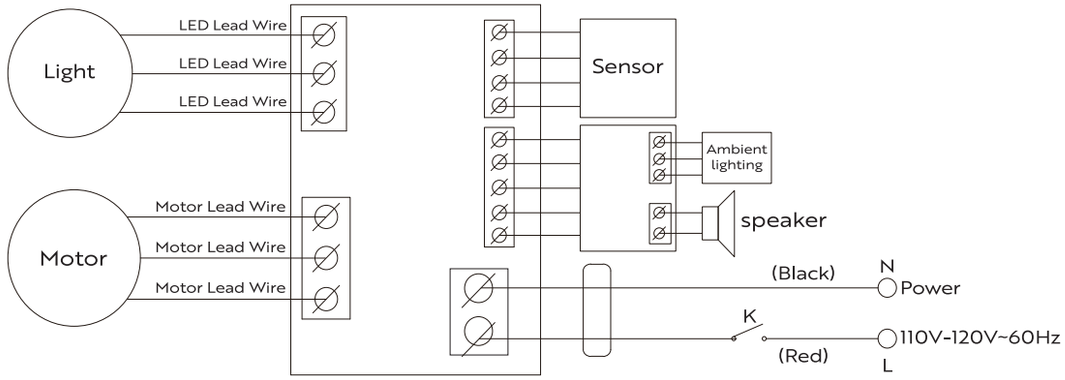

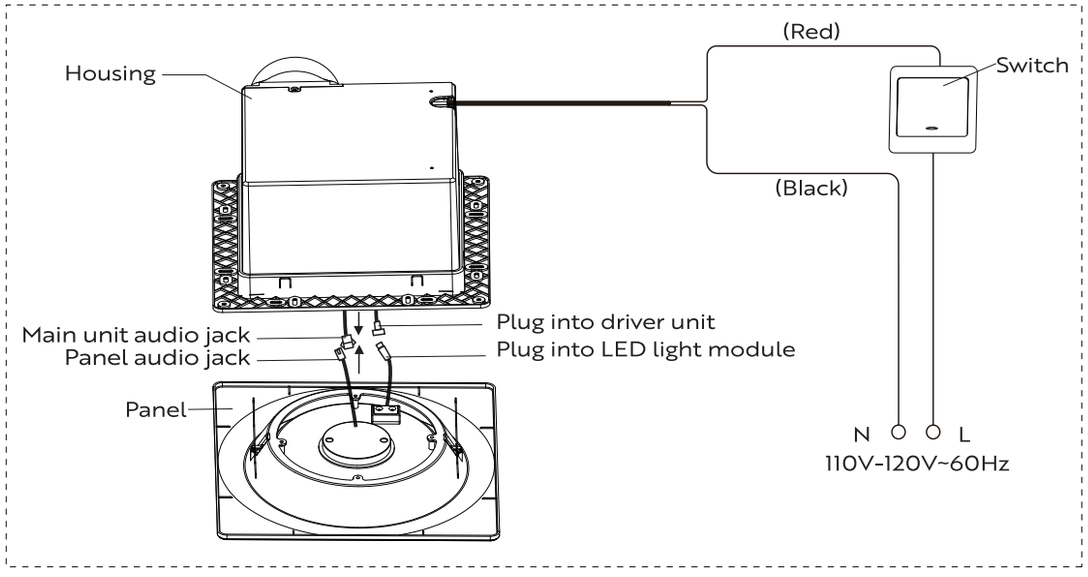

PLANNING INSTALLATION

Before starting the installation, ensure that all parts are present.
Compare the components with the package contents and hardware list.
Do not proceed if any parts are missing or damaged.

WARNING: Turn off the power at the breaker box before beginning installation.

NOTE: Wiring configuration may vary depending on your previous fan setup.
Some components needed for installation may not be included in the package.
Additional materials can be found at your local hardware store.

1. Carefully remove the fan from the packaging and verify that all components are included.
2. Verify that the area above the installation location allows for proper wiring, ductwork, and ventilation.
3. Inspect the ductwork and wiring before proceeding with the installation.
4. Choose an installation location that allows access for future maintenance or inspections without having to remove the entire fan.
5. Installation may require two people - one working from the attic and one in the room - to safely position and secure the fan housing.

Before installation please lift the housing and firmly snap the outer frame buckle into the groove.

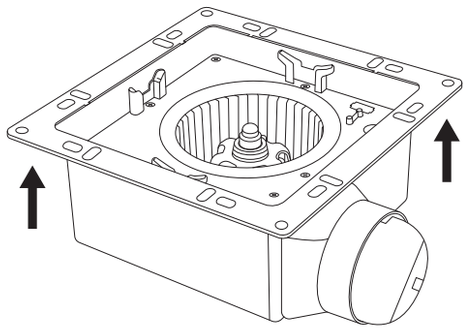

Before Lifting

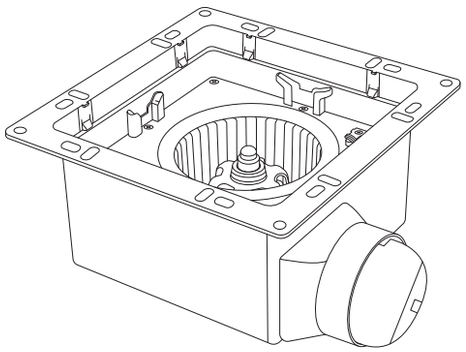

After Lifting

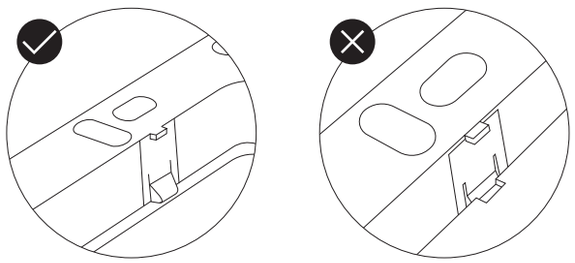

SECTION D

Installation Template

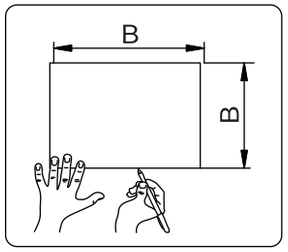

1. Cut the ceiling along the marked track size B*B.

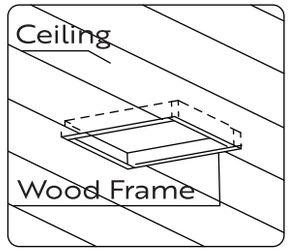

2. Fix the wood frame onto the ceiling.

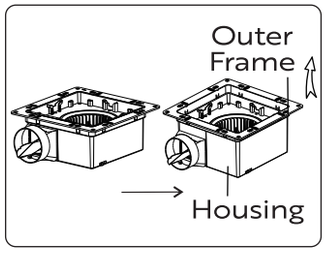

3. Lift the housing and securely snap the outer frame buckle into the groove inside the box. Connect the power either separately to a switch or in parallel with the fan circuit.

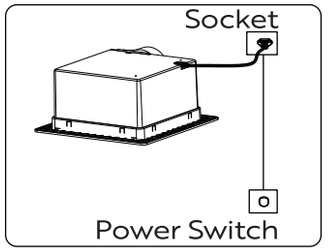

4. Plug the power cord into a standard two-prong socket or connect to a switch circuit.
Test the connection before final assembly.

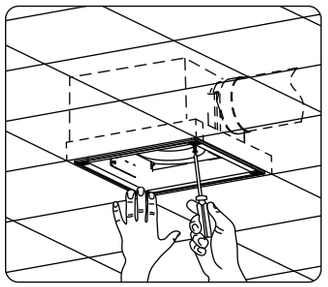

5. Screw the base of the fan into the wood frame.
Add angle brackets for extra support if needed.

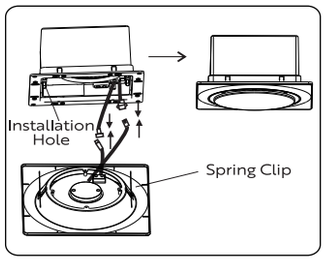

6. Press the spring clips on both sides of the panel and snap them into the matching mounting holes on the unit.
Connect the lighting and audio jacks between the main unit and the panel, making sure they are securely inserted.

SECTION E

Installation and Operating Instructions

1. If there is already a pre-cut opening in the ceiling, ensure that the maximum size of the square opening does not exceed 11.6 x 11.6 inches.

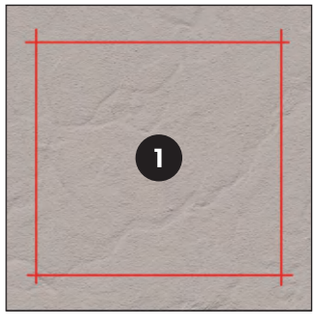

2. Prepare two wooden strips with sufficient strength, each 3" wide and 14" long. Insert the strips into the ceiling opening, ensuring no more than 0.7" extends beyond the edge. Secure each strip firmly to the ceiling with nails or screws.

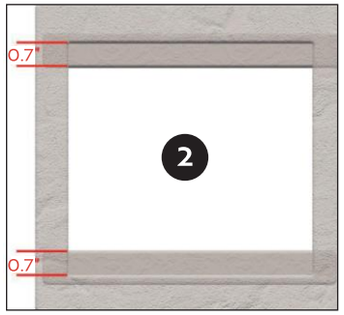

3. Set Up Ventilation Duct and Power Cord
   Before proceeding, prepare the ventilation duct and power cord. Connect the ventilation duct to the fan's outlet, and connect the power cord from the fan to the control switch. The control switch will allow you to operate the fan. Refer to the wiring diagram in SECTION C for guidance. If you are not familiar with electrical work, please hire a licensed electrician to handle the wiring.

4. Install the Fan
   Once the duct and wiring are connected, carefully insert the fan into the square opening. Use screws to secure the fan in place, following the direction indicated by the arrow in the provided image.

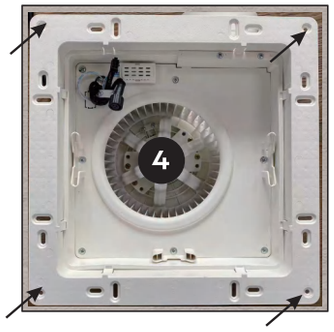

5. Connect the LED light
   Find the male and female connectors on the fan and light modules, fully insert them, and then tighten the black screws on the wires.

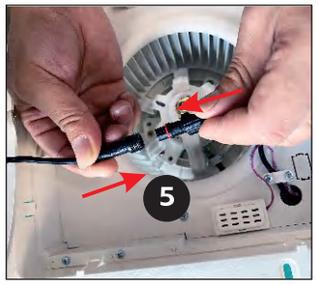

6. Connect Audio Jack
   Plug the square black jack from the main unit into the panel jack securely.

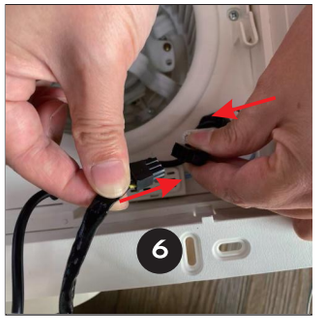

7. Attach the Panel
   Grip the spring clips on both sides of the panel and align them with the installation holes on the fan unit. Once aligned, firmly secure and fasten the panel into place.

8. Installation Complete
   Congratulations! Your exhaust fan installation is now complete.

SECTION F

Ventilation Fan Operation

1. Turning the Fan On
Flip the wall switch to the ON position to activate the fan.

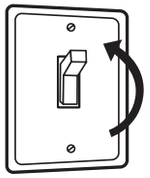

2. Turning the Fan Off
Flip the wall switch to the OFF position to deactivate the fan.

3. Remote Control Pairing
To pair the remote control with the fan light:

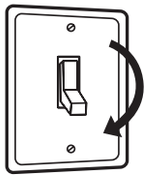

Pairing Guide:
Within 30s of powering on, press the Standby key 5+ times. A long "beep" confirms pairing. If not, restart and try again. (Pre-paired at factory; only needed when replacing remote.)

NOTE: The product's humidity sensor cannot be manually adjusted. The fan automatically adjusts its airflow based on the surrounding humidity levels.

Mode	Condition / Speed Level	Operating Mode	Airflow (CFM)
Auto (Humidity Sensor Mode)	Less than or equal to 50%	Quiet Mode	30 CFM
	Between 50% and 80%	Normal Mode	110 CFM
	Above 80%	Storm Mode	160 CFM
Manual Mode	Speed Level 1	Quiet Mode	30 CFM
	Speed Level 2	Quiet Mode	50 CFM
	Speed Level 3	Normal Mode	90 CFM
	Speed Level 4	Normal Mode	110 CFM
	Speed Level 5	Storm Mode	120 CFM
	Speed Level 6	Storm Mode	160 CFM

Lighting Modes

Color Temperature	1500 lm, 2700K Warm Light	1500 lm, 4000K Neutral Light	1500 lm, 5700K Cool White
Brightness	10% / 20% (Dim)	40% / 60% (Medium)	80% / 100% (Bright)
Night Light	200 lm, 2700K at 10% brightness		

RGB bathroom exhaust fan remote control

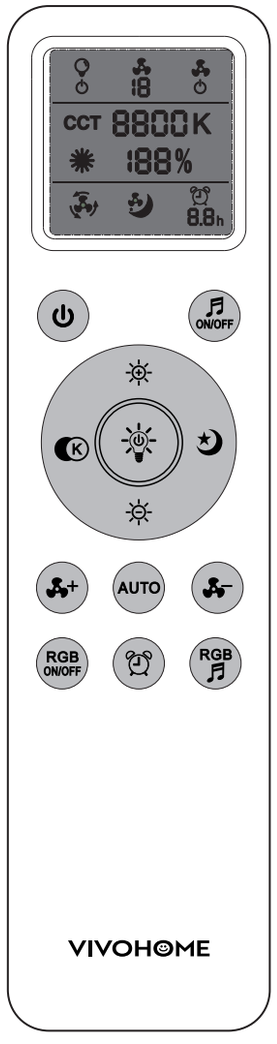

OFF
When the exhaust fan is on, press this button to turn off ventilation, lighting, and audio functions. The corresponding icons on the remote LCD will turn off.

ON/OFF
Press once: audio on & Bluetooth connect (beep confirms connection, ready to play music).
Press again: audio off & disconnect.
VIVOHOME Bath Exhaust Fan

Fan Speed +
When the fan is running, press the "Fan Speed +" button to increase the fan speed by one level.
The maximum speed is Level 6.

Fan Speed -
When the fan is running, press the "Fan Speed -" button to decrease the fan speed by one level.
The minimum speed is Level 1.

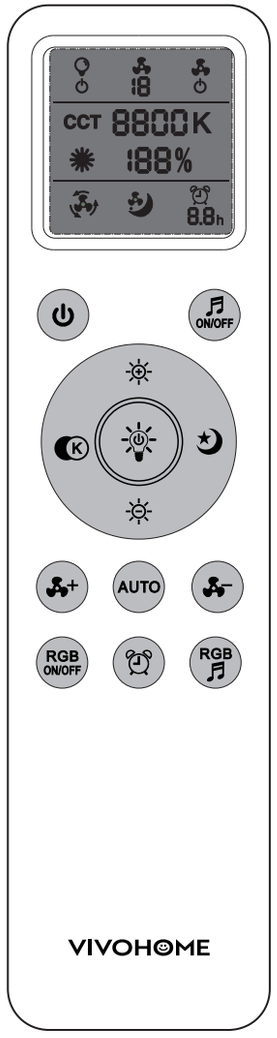

AUTO

- Power on → AUTO mode (fan runs automatically by humidity)
- Press AUTO → fan off, standby
- Standby → press AUTO → AUTO mode restarts
- After manual speed adjustment → press AUTO → returns to AUTO

AUTO Mode Fan Speeds:

- Humidity sensor detects N ≤ 50% → Fan at Level 1
- Humidity sensor detects 50% < N ≤ 80% → Fan at Level 3
- Humidity sensor detects N > 80% → Fan at Level 5

Light Switch

Press the "Light Switch" button to turn the light ON or OFF.

- The buzzer will beep once.

Brightness +

When the light is ON, press the "Brightness +" button to increase brightness by one level.

- Maximum brightness: 100%

Brightness -

When the light is ON, press the "Brightness -" button to decrease brightness by one level.

- Minimum brightness: 10%

Colour Temperature Adjusting

When the light is ON, press the "Color Temperature" button to cycle through color temperatures: 2700K → 4000K → 5700K, then repeat.

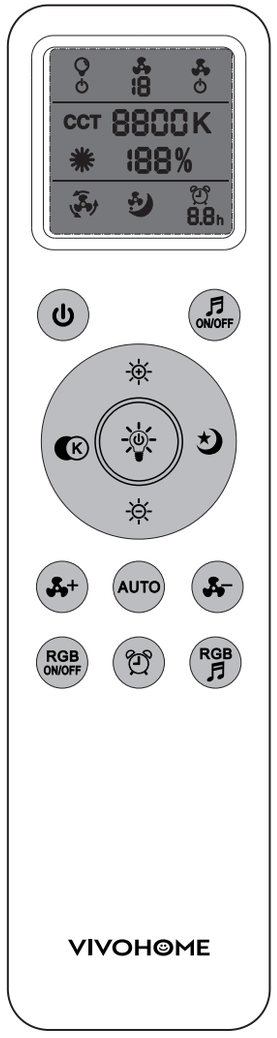

RGB ON/OFF (Regular color light mode, not music-sync)

Press once: Mode 1 Color Cycle
Press repeatedly: Red → Orange → Yellow → Green → Cyan → Blue → Purple → Mode 1 Color Cycle
Long press 3s: turn off the entire unit color light mode
When turned on, the remote LCD shows ON; when turned off, it shows OFF

Timer

Press repeatedly: 30 min → 1 hr → 90 min → Off → Timer off (cycle repeats)

Night Lamp

Night Lamp: 200 LM, 2700K
Press once: Night Lamp ON
Press again: Night Lamp OFF

Silent Setting

Press RGB ON/OFF and RGB ♫ simultaneously to turn the buzzer on or off.

RGB ♫ (Music-sync color light mode; lights stay on without music but won't sync unless music plays)

Press once → Mode 1: Color Cycle
Press again → Breathing Gradient
Press again → Turn off color lights

Memory Function:
When the unit is in standby or loses power, it will automatically restore the previous settings (color temperature & brightness) once power is restored and the light mode is turned on.

SECTION G

Troubleshooting

Problem	Solution	
The fan seems louder than it should.	The CFM is too great.	Be sure the CFM rating on the fan matches the square footage of your room.
	The damper is damaged or not working properly.	Check the damper to ensure it is opening and closing properly. If the damper has become damaged, please call Customer Service.
	The bend in the duct is too close to the fan discharge.	Be sure you do not have any sharp bends in the duct closer than 18 in. to the fan discharge.
	The fan discharge is reduced to fit a smaller duct.	Use the recommended size ducting to reduce fan noise.
	The fan body is not attached securely.	Be sure the fan is securely attached to the ceiling joists.
The fan is not clearing the room.	There is insufficient airflow intake in the room.	Be sure a door or window is slightly ajar or opened to allow airflow. The fan is not able to draw air out of the room without enough airflow to draw from.
	There is insufficient CFM.	Be sure the CFM rating on the fan matches the requirements for your room size. **NOTE:** Using a tissue is not the correct method for determining if the fan is operating properly. If the fan clears steam from the room within approximately 15 minutes of completing your shower, then the fan is operating properly.

SECTION H

Caution

1. Read all instructions and safety warnings carefully before beginning installation. Review the exploded view diagram provided.
2. Disconnect power at the circuit breaker or by removing the fuse before performing any electrical work. This ensures full disconnection from the power supply.
3. All electrical work must be performed by a licensed and qualified electrician.
4. Use common sense and exercise caution throughout the installation and operation of this product.
5. This product is not intended for use by individuals (including children) with reduced physical, sensory, or mental capabilities, or those lacking experience and knowledge, unless they are supervised or instructed by a person responsible for their safety.
6. Children must be supervised to ensure they do not play with the unit.
7. Use a power cord rated for at least 10 amps.
8. Do not cut or notch joists, beams, or rafters to install the fan.
9. Be careful not to damage hidden electrical wiring or plumbing when cutting into the ceiling.
10. Install the fan so that switches and controls are out of reach of anyone using a bath or shower.
11. Do not install the fan directly above a shower or bathtub, or in any location where it could be splashed with water.
12. After installation, verify that all connections are secure to prevent the unit from falling and causing injury or property damage.
13. Do not insert objects through the fascia grille.
14. If the power cord is damaged, it must be replaced by the manufacturer, their service agent, or a qualified electrician using only manufacturer-approved parts.
15. Do not install or use the fan outdoors or in any area where it could be exposed to water or moisture. Indoor use only.
16. The fan should be mounted at least 7 feet (2.1 meters) above the floor.
17. A multi-pole switch is required for installation. The gap between contacts must be at least 3 mm.
18. Use vent covers to prevent the entry of water or insects into the ducting system.

SECTION I

Maintenance

1. Turn off the power before performing any maintenance.
2. Remove the louver, cover, and fan blade. Clean these parts with water and a brush. Use a soft cloth and a mild detergent to wipe off grease.
   Do not use water over 60°C (140°F), petroleum-based products, benzene, thinner, or any other harsh solvents.
   Important: Do not allow water to enter the motor.
3. Dry all cleaned parts thoroughly using a soft dry cloth or allow them to air dry completely. Reassemble all parts in the reverse order of removal.
4. During the warranty period, if the fan malfunctions due to manufacturing defects under normal use, it will be repaired or replaced free of charge.
5. After the warranty period, repair services are not provided, but you may contact our customer support team for maintenance advice.
6. The warranty does not cover the following cases:
   -Use of non-original or third-party replacement parts.
   -Malfunctions caused by incorrect operation, improper maintenance, unauthorized repair, force majeure events, or other external factors.

SECTION J

Warranty

The VIVOHOME warranty program is our commitment to you. We are committed to providing you with a high-quality product that meets your needs and expectations. To demonstrate our confidence in the durability and performance of our products, we offer the following warranty.

WARRANTY COVERAGE

This warranty applies to all orders, purchases, or use of products sold only by VIVOHOME and is valid for 1 year from the purchase date. Please note, this warranty only covers the original order. If a replacement is provided within the warranty period, it does not extend the warranty.

WARRANTY EXCLUSIONS

This warranty does not cover damages caused by misuse, accidents, unauthorized modifications, or any factors unrelated to product manufacturing and design, including but not limited to:

- Loss of parts during use.
- Normal wear and tear of products or parts.
- Incorrect installation (e.g., using the wrong voltage) or improper assembly.
- Overloading the product's bearing capacity.
- Usage in extremely harsh conditions.
- Improper cleaning or lack of maintenance.
- Damage resulting from unintended use of the product.
- Damage resulting from unauthorized modifications or service.
- Indirect losses or damages related to the product.

HOW TO MAKE A WARRANTY CLAIM

If you encounter any defects affecting the product's functionality or if the product fails and cannot be repaired during the warranty period, please reach out to our customer service team via email, or our app's messaging service at your earliest convenience. To expedite your claim, kindly include:

- Order number
- Photos and/or videos illustrating the issue
- A detailed description of the problem

VIVOHOME will provide technical support, replacement, refund, or other solutions based on the issue's specifics. If you wish to return the original package for any reason, please contact us for confirmation before initiating the return. You can expect a response within 48 hours.

Thank you for choosing VIVOHOME. We are dedicated to ensuring your satisfaction and the quality of your purchase. If you have any questions or need further assistance, please don't hesitate to reach out to our customer service team.

This equipment has been tested and found to comply with the limits for a Class B digital device, pursuant to Part 15 of the FCC Rules. These limits are designed to provide reasonable protection against harmful interference in a residential installation. This equipment generates uses and can radiate radio frequency energy and, if not installed and used in accordance with the instructions, may cause harmful interference to radio communications. However, there is no guarantee that interference will not occur in a particular installation. If this equipment does cause harmful interference to radio or television reception, which can be determined by turning the equipment off and on, the user is encouraged to try to correct the interference by one or more of the following measures:

-- Reorient or relocate the receiving antenna.

-- Increase the separation between the equipment and receiver.

-- Connect the equipment into an outlet on a circuit different from that to which the receiver is connected.

-- Consult the dealer or an experienced radio/TV technician for help.

Bathroom Exhaust Fan with RGB Light:

This equipment complies with FCC radiation exposure limits set forth for an uncontrolled environment. This equipment should be installed and operated with minimum distance 20cm between the radiator & your body.

This device complies with part 15 of the FCC Rules. Operation is subject to the following two conditions: (1) This device may not cause harmful interference, and (2) this device must accept any interference received, including interference that may cause undesired operation.

Changes or modifications not expressly approved by the party responsible for compliance could void the user's authority to operate the equipment.

RGB bathroom exhaust fan remote control:

The device has been evaluated to meet general RF exposure requirement. The device can be used in portable exposure condition without restriction.