User Manual

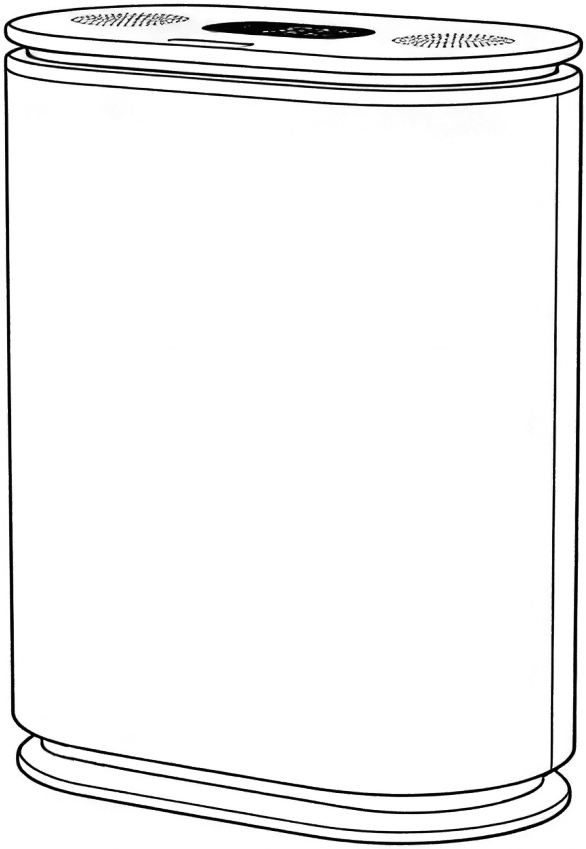

HSTW-9

Luxury Towel Warmer

Contents

Important Safety Instructions 01

FCC Information 02

Location of Part & Controls 03

Using The Towel & Blanket Warmer 04

Product Specifications 04

Function overview 05

Tips for Best Results 06

Care and Maintenance 06

CAUTION

TO REDUCE THE RISK OF SERIOUS INJURY, PLEASE NOTE : THIS IS NOT A TOY. DO NOT ALLOW CHILDREN TO OPERATE OR PLAY NEAR THE TOWEL & BLANKET WARMER.

TO REDUCE THE RISK OF FIRE OR ELECTRIC SHOCK, DO NOT EXPOSE THIS UNIT TO RAIN OR MOISTURE

The lightning flash with arrow-head symbol within an equilateral triangle is intended to alert the user to the presence of uninsulated "dangerous voltage" within the unit's enclosure that may be of sufficient magnitude to constitute a risk of electric shock.

The exclamation point within an equilateral triangle is intended to alert the user to the presence of important operating and maintenance (servicing) instructions in the literature accompanying the unit.

Important Safety Instructions

ALL SAFETY AND OPERATING INSTRUCTIONS SHOULD BE READ AND FOLLOWED BEFORE OPERATING THE UNIT.

- FOR HOUSEHOLD USE ONLY
- FOR ADULT USE ONLY
- FOR DRY FABRIC ITEMS ONLY

SAVE THESE INSTRUCTIONS.

WARNING

To reduce risk of fire,electric shock, or serious injury to persons when using the appliance, follow basic precautions including the Read all instructions before using the appliance.

- Always unplug the unit from the electrical outlet immediately after use.
- Do not use appliance for anything other than its intended purpose.
- Do not place or store the unit where it can fall or be pulled into a tub or sink.
- Do not place in or drop into water or other liquid.
- Do not reach for a unit that has fallen into water. Unplug it immediately.
- Care should be taken so that objects do not fall into and/or liquids are not spilled onto the unit.
- This unit should never be left unattended when plugged in.
- Close supervision is necessary when this unit is used near children or disabled persons.

- Use this unit for its intended purpose as described in this manual.
- Never operate this unit if it has a damaged cord or plug, if it is not working properly, or if it has been dropped, damaged, or dropped in water.
- Keep cords away from heated surfaces. Do not wrap the cord around the appliance or let it hang over the edge of a table or counter.
- Do not use outdoors.
- Do not alter the safety plug or use an extension cord with this device.
- Do not operate with a voltage converter.
- Do not touch hot surfaces.
- Do not use accessory attachments not recommended by the manufacturer as this may case injuries.

FCC Information

CAUTION

Changes or modifications not expressly approved by the party responsible for compliance could void the user's authority to operate the equipment.

This device complies with Part 15 of the FCC Rules. Operation is subject to the following two conditions:

1. This device may not cause harmful interference.
2. This device must accept any interference received including interference that may cause undesired operation.

WARNING: Changes or modifications to this unit not expressly approved by the party responsible for compliance could void the user's authority to operate the equipment. Note: This equipment has been tested and found to comply with the limits for a Class B digital device, pursuant to Part 15 of the FCC Rules. These limits are designed to provide reasonable protection against harmful interference in a residential installation. This unit generates, uses and can radiate radio frequency energy and if not installed and used in accordance with the instructions, may cause harmful interference to radio communications. However, there is no guarantee that interference will not occur in a particular installation. If this equipment causes harmful interference to radio or television reception(which can be determined by turning the equipment off and on), the user is encouraged to try to correct the interference by one or more of the following measures:

- Reorient or relocate the receiving antenna.
- Increase the separation between the equipment and receiver.
- Connect the equipment to an outlet on a circuit different from that to which the receiver is connected.
- Consult the dealer or an experienced radio/TV technician for help.

FCC Radiation Exposure statement

The device has been evaluatec to meel general RF exposure requirement. The device can be used in portable exposure condition without restriction.

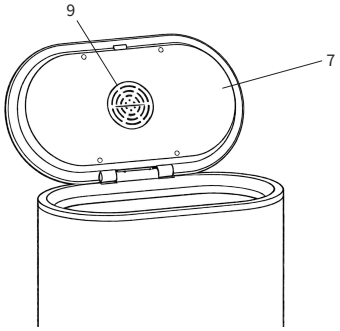

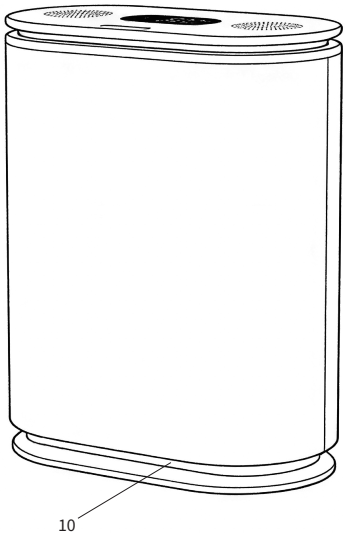

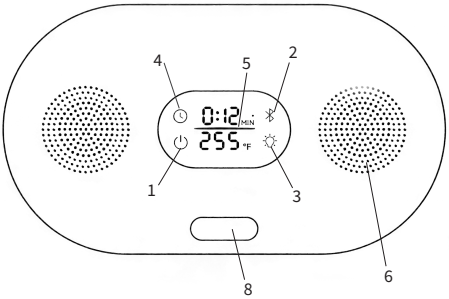

PARTS AND CONTROLS

1.	Power control: Touch to turn heating on/off
2.	Bluetooth: •Short press to turn Bluetooth speaker on/off
3.	Light control: •Short press to turn ambient lighting on/off •long press to change lighting mode
4.	Timer control: Touch to set heating time
5.	Heating status indication light
6.	Bluetooth speaker
7.	Lid
8.	Child safety lock
9.	Fragrance disc holder
10.	RGB light

USING THE TOWEL WARMER

The Towel Warmer will warm two bath towels measuring approximately 40" x 70" .

1. Place the Towel Warmer on a dry, level, hard surface.
2. Insert the power cord into an electrical outlet.
3. Open the Lid and remove any packaging contents.
4. Place your dry towel(s) inside. Replace the lid.
5. Method 1: After powering on, touch the power button. The heating time will flash for 5 seconds, and then heating will begin. The default time is 30 minutes.
6. After powering on, press the Bluetooth button to connect your phone to the HSTW-9-BT via Bluetooth. Once connected, you can play music; adjust the volume according to your phone's settings. Press the Bluetooth button again to turn off Bluetooth after playback.
7. After powering on, press the RGB lighting button to activate the white night light mode. Press and hold for 2 second to activate the carousel mode. Press briefly for turn off the lights.
8. Method 2: After powering on, touch the power button, then touch the timer button to select the heating time. Finishing the selecting, the heating time flashes for 5 seconds and then starts heating.
9. When the heating cycle ends or the unit is powered off, the heating status light will turn off once the temperature drops below 140°F.

PRODUCT SPECIFICATIONS

Product Capacity ····· 22L
Rated Voltage ····· 120V AC
Frequency ····· 60Hz
Wattage Max ····· 450W
Net Weight ·····10.14LBS
Gross Weight ·····12.13LBS
Dimensions with Bases ····· 54CM (H) ×25.7CM (W) 44.5CM (L)

This device complies with Part 15 of the FCC Rules.

FUNCTION OVERVIEW

Power control:

- touch to turn on/ turn off ---heating

Bluetooth:

- Short press to turn on/ turn off Bluetooth speaker

Light control：

- Short press to turn on/ turn off the ambient lighting
- Long press to change the ambient lighting

Timer control:

- Touch to set heating time.

Indication Light

- After powering on, touch the power button, the heating time flashes for 5 seconds and then starts heating. The default time is 30 minutes.
- After powering on, touch the power button, then touch the timer button to select the heating time. Once selected, the heating indicator will flash for 5 seconds before heating begins.
- When the temperature is below 140°F, the heating status light is green.
- When the temperature is higher than 140 °F, the heating status indication light is red.
- When the set time is over, and the temperature is below than 140 °F, the indication light will turn off.

Time Settings

- Heating Time Options: Choose from four preset durations - 15, 30, 45, 60 minutes by tapping the time button.
- Power Button Function: Start or stop heating by tapping the power button.
- Default Settings: If no time is selected after powering on and pressing the power button, heating starts with a default time of 30 minutes.
- Heating Interruption: Stop heating by touching the power button and start again by tapping it once more (heating starts with a default time of 30 minutes).

Child Safety Lock

- Press and hold the child lock to open the flip cover.

Fragrance Disc Holder

The aromatherapy box is located on the underside of the lid. Remove aroma disc or solid fragrance from plastic. Slide cover and insert disc. Slide cover back in place.
Note: DO NOT use liquid or oil scents. Aroma not included.

TIPS FOR BEST RESULTS

1. Use cotton or cotton blend towels or fabrics.
2. For fast and even heating, loosely place one towel inside the warmer. Adding a second towel will increase heating time.
3. Use only with DRY fabrics.
*NOTE: DO NOT use with damp or wet articles.
4. Avoid using delicate fabrics that cannot withstand high heat. Fabrics that require a cool iron may not withstand the heat of the warmer, which could result in damage to both the fabric and the product.
5. Once the heating cycle has begun, keep the lid closed. This will prevent heat from escaping. Opening the lid during operation may result in longer heating times.
*NOTE: Condensation on the lid and interior of the product is normal.
6. When used with the Towel & Blanket Warmer, the Fragrance Disc may warp over time.

CARE AND MAINTENANCE

Unplug the unit before cleaning. Wipe with a dry cloth only when the unit is cool to the touch.