Strato Automation

OPEN STAT

Product Description

I/O: 5 UI's, 3 AO's & 7 BO's

Temp & Humidity (default)

BACnet MSTP (default)

Applications:

RTU, HP, WSHP, FCU, Small AHU

Humidification and Dehumidification Control

Ref: Firmware version 1.0.4 and higher

Model Information

MODEL	TEMP, RH%	MOTION	CO2 NDIR	BACNET WIFI6	MSTP
OS537H	X				X
OS537HW	X			X	X
OS537MHW	X	X		X	X
OS537MHCW	X	X	X	X	X

Quick links:

- Select between RTU or FCU
- Rooftop Unit (RTU)
- Setup Menu
- Fan Coil Unit (FCU)
- Setup Menu
- Network
- Specifications
- End User Operation Guide

Contents

Symbol Definitions **3**
Cybersecurity **3**
Compliance **4**
Installation **5**
Overview **6**
Connectors 6
Select between RTU or FCU **8**
Rooftop Unit (RTU) **9**
Wiring 9
RTU Select Your Equipment 9
Rooftop 2 Stages (RT 2STG) 10
Rooftop with Economizer (RT ECON) 11
Heat Pump 2 Stages (HP 2STG) 13
Rooftop Indoor Air Quality (RT IAQ) 15
Rooftop with 0-10VDC SCR electric heating (RT MOD) 17
Heat Pump with Dehumidification Output (HP DEH) 19
Humidifier-Dehumidifier (HUM-DEH) 21
Rooftop 3 Stages (RT 3STG) 23
Rooftop 4 Stages (RT 4STG) 25
RTU Control Curves 27
Setup 30
Setup Menu 30
BACnet Objects 33
Overview 33
Physical Inputs and Outputs 35
Analog Values (AV) 36
Binary Values (BV) 38
Multi-State Values (MSV) 39
Loop(s) 44
Schedule 44
Fan Coil Unit (FCU) **45**
Wiring 45
FCU Select Your Equipment 45
4 Pipes – Modulating 0-10 VDC Valves 46
4 Pipes – Floating valves 47
4 Pipes – On/Off N.C. Valves 48
4 Pipes – On/Off N.O. Valves 49
2 Pipes – Modulating 0-10 VDC Valves 50
2 Pipes – Floating Valves 51
2 Pipes – On/Off N.C. 52
2 Pipes – On/Off N.O. 53
Fan Control – ECM (0-10VDC) MSV-58 = On-Auto 54
Fan Control – 3 Speed Fans MSV-58 = L-M-H 55
Fan Control – 2 Speed Fans MSV-58 = L-H 56
Fan Control – Single Speed Fans MSV-58 = On-Auto . 57
Optional inputs 58
FCU Control Curves 59
Setup 62
Setup Menu 62
BACnet Objects 65
Overview 65
Physical Inputs and Outputs 66
Analog Values (AV) 67
Binary Values (BV) 68
Multi-State Values (MSV) 69
Loop(s) 73
Schedule 73
Network **74**
MS/TP Wiring 74
RS-485 Network Guidelines OS537 Controllers 74
Testing Wiring 75
Specifications **76**
End User Operation Guide (RTU) **77**
End User Operation Guide (FCU) **78**

Symbol Definitions

The symbols defined below are used throughout this document to highlight information that requires particular attention.

ATTENTION: This information requires special consideration.

TIP: Identifies advice or hints to help the user perform certain tasks.

WARNING: Indicates a potentially hazardous situation which, if not avoided, may result in minor or moderate injury, equipment damage, or data loss. It may also be used to alert against unsafe practices.

CAUTION: Indicates a situation where users must observe precautions for handling electrostatic-sensitive devices

Cybersecurity

The Strato Automation OS537 series controllers present a low cybersecurity risk profile due to their streamlined design. These devices do not store, process, or transmit sensitive customer or enterprise data. All communications use standard open building automation protocols (BACnet/IP and BACnet MS/TP), which are not intended to carry confidential information.

Cybersecurity considerations for the OS537 therefore focus on network-level protection rather than device-level defenses. Recommended best practices include deploying the controllers on segmented building automation networks, restricting unnecessary access, and conforming to site-specific IT security policies. By design, the OS537 minimizes exposure, delivering reliable operation without adding unnecessary cybersecurity complexity.

Compliance

ISED non-interference disclaimer

This device contains licence-exempt transmitter(s)/receiver(s) that comply with Innovation, Science and Economic Development Canada's licence-exempt RSS(s). Operation is subject to the following two conditions:

(1) This device may not cause interference.

(2) This device must accept any interference, including interference that may cause undesired operation of the device.

This device complies with the Canadian ICES-003 Class A specifications. CAN ICES-003(A) / NMB-003 (A).

ISED RF Exposure statement

This equipment complies with ISED RSS-102 radiation exposure limits set forth for an uncontrolled environment. This equipment should be installed and operated with minimum distance 20 cm (7.9 inches) between the radiator and any part of your body. This transmitter must not be co-located or operating in conjunction with any other antenna or transmitter.

J.2 Restrictions

a. Except as allowed in J.2(b), devices are only to be used when the aircraft is on the ground.

b. Devices used in-flight are subject to the following restrictions:

i. they shall be used within closed, exclusive on-board, communication networks within the aircraft

ii.they shall not be used in wireless avionics intra-communication (WAIC) applications where external structural sensors or external cameras are mounted on the outside of the aircraft structure

iii.they shall not be used on aircraft equipped with a body/fuselage that provides little or no RF attenuation except when installed on unmanned air vehicles (UAVs) and complying with J.2(d)

iv.devices operating in the 59.3-71.0 GHz band shall not be used except if they meet all of the following conditions:

1. they are FDS
2. they are installed within personal portable electronic devices
3. they comply with the relevant requirements in J.3.2(a), J.3.2(b) and J.3.2(c)

FCC Compliance Statement

This equipment has been tested and found to comply with the limits for a Class A digital device, pursuant to part 15 of the FCC Rules. These limits are designed to provide reasonable protection against harmful interference when the equipment is operated in a commercial environment. This equipment generates, uses, and can radiate radio frequency energy and, if not installed and used in accordance with the instruction manual, may cause harmful interference to radio communications. Operation of this equipment in a residential area is likely to cause harmful interference in which case the user will be required to correct the interference at his own expense.

This device complies with Part 15 of the FCC Rules. Operation is subject to the following two conditions:

(1) this device may not cause harmful interference, and

(2) this device must accept any interference received, including interference that may cause undesired operation. Please note that changes or modifications not expressly approved by the party responsible for compliance could void the user's authority to operate the equipment.

Changes or modifications not expressly approved by the party responsible for compliance could void the user's authority to operate the equipment.

FCC RF Exposure Statement

This equipment complies with FCC radiation exposure limits set forth for an uncontrolled environment. This transmitter must not be co-located or operating in conjunction with any other antenna or transmitter. In order to avoid the possibility of exceeding the FCC radio frequency exposure limits, this equipment should be installed and operated with minimum distance 20 cm (7.9 inches) between the antenna and your body during normal operation. Users must follow the specific operating instructions for satisfying RF exposure compliance.

Installation

1. After unpacking your OS537, gently pull away from the base using the left side of the front cover.

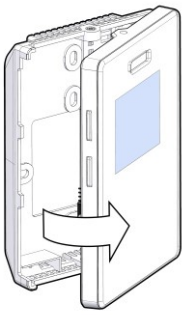

2. Pull the wires through the hole in the base.

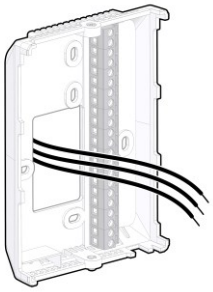

3. Use 2 screws to attach the base to the wall.

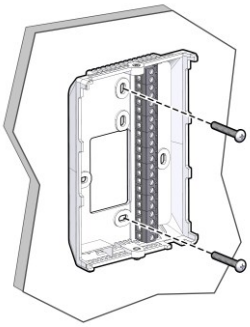

4. Connect the wires to the terminals. Refer to the documentation for the proper connections. Then, gently push the front cover straight on to the base.

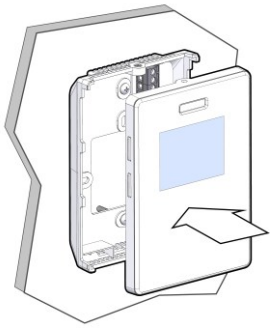

5. Optionally use the lock screws on top and bottom to secure the cover. Use a 1/16" Allen key and turn counterclockwise until flat with cover.

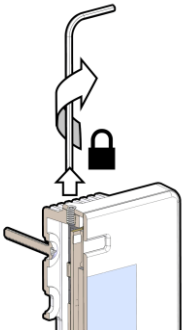

Electronic controls are static sensitive devices; discharge yourself properly before manipulating and installing the device.

Short circuits or incorrect wiring may permanently damage the controller. Double-check your wiring before applying power.

If a control failure could lead to personal injury and/or property loss, the installer must add safety devices and/or alarm systems to protect against failures.

Overview

CONNECTORS

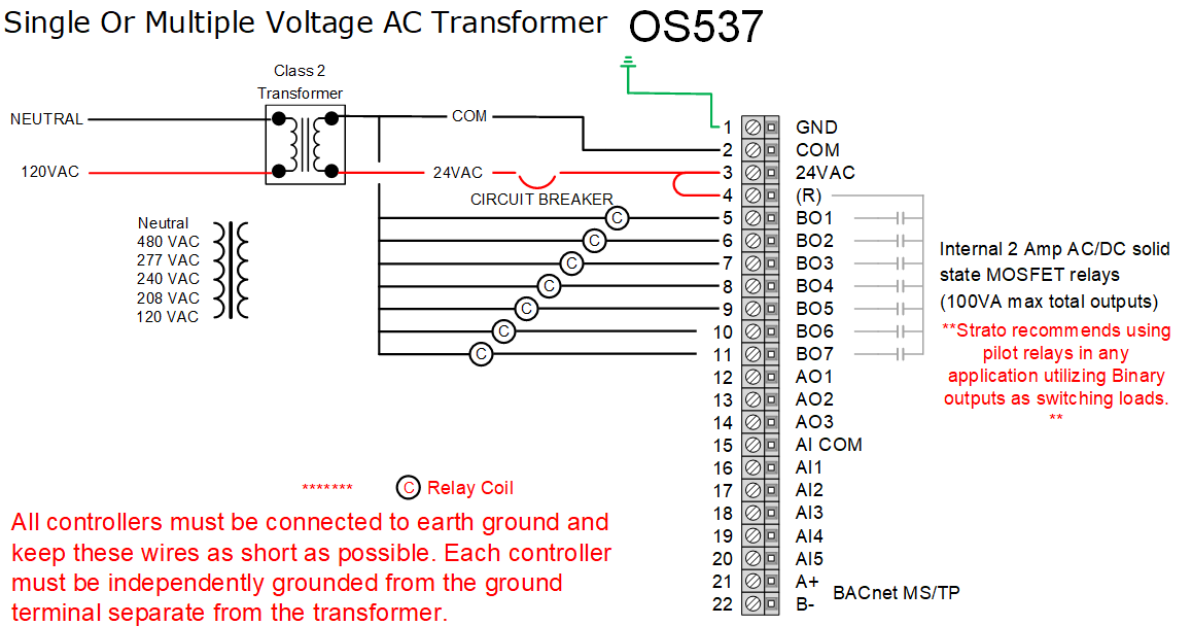

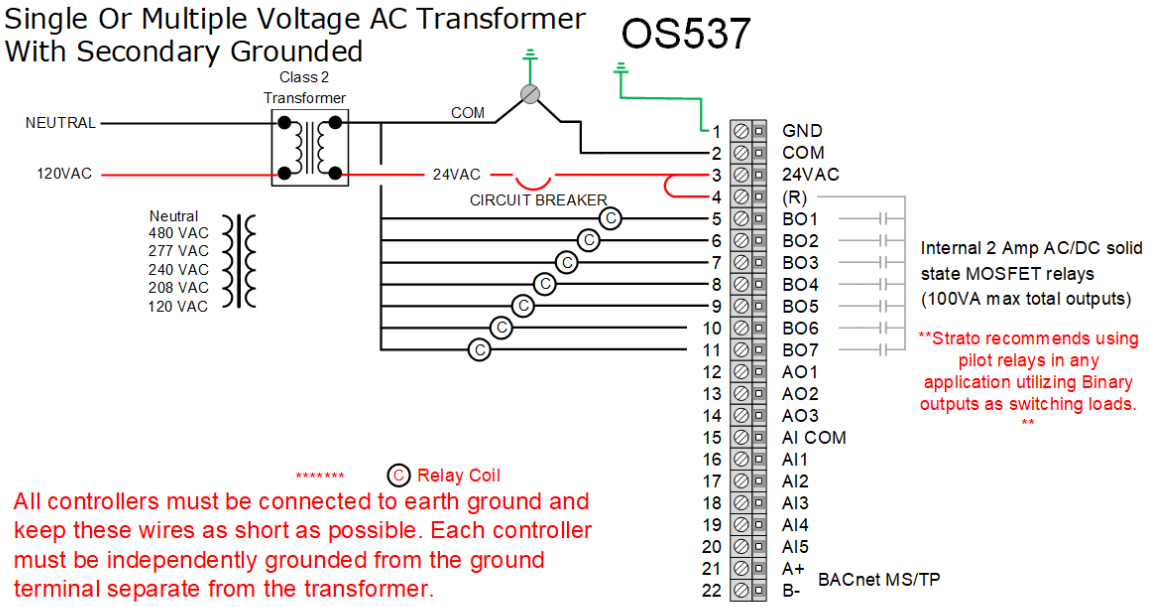

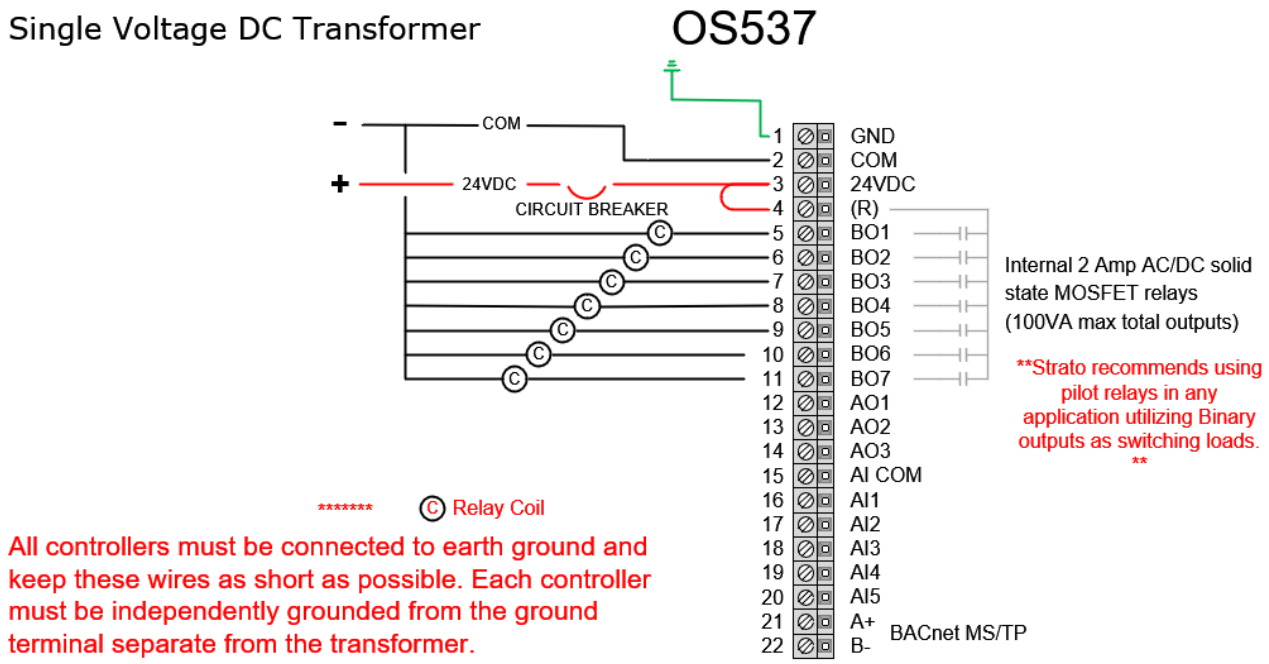

Add a 24VAC transformer when the equipment does not supply the power.

For details on grounding within control panels, NFPA 79 and UL508A provide the required details.

Select between RTU or FCU

At first power-up, the following menus will appear. This will create all default BACnet objects for a RTU or a FCU in °F or °C:

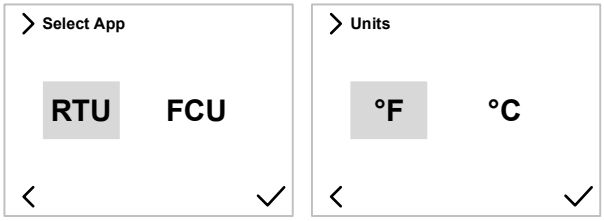

To reinitialize the controller to factory settings (completely reset system settings, network and Wi-fi settings) and display again RTU/FCU selection:

1) Disconnect power
2) Hold these 3 buttons
3) Reconnect power
4) Keep holding buttons until the full red circle is complete

Rooftop Unit (RTU)

Wiring

RTU Select Your Equipment

RT 2STG	Typical rooftop with one or two stages of cooling
RT ECON	Rooftop with full control of the economizer
HP 2STG	Heat pump with one or two stages
RT IAQ	Rooftop with Indoor Air Quality CO2 control
RT MOD	Rooftop with 0-10VDC SCR electric heating
HP DEH	Heat pump with on-off dehumidification output
HUM-DEH	Rooftop with 0-10VDC humidifier and on-off dehumidification input
RT 3STG	Rooftop with three stages of cooling
RT 4STG	Rooftop with four stages of cooling

Connector	I/O id	BACnet Name	RT 2STG	RT ECON	HP 2STG	RT IAQ	RT MOD	HP DEH	HUM-DEH	RT 3STG	RT 4STG
1	GND										
2	COM										
3	24V										
4	(R)										
5	BO1	BO_1	G	G	G	G	G	G	G	G	G
6	BO2	BO_2	Y1	Y1	Y1	Y1	Y1	Y1	Y1	Y1	Y1
7	BO3	BO_3	Y2	Y2	Y2	Y2	Y2	Y2	Y2	Y2	Y2
8	BO4	BO_4	W1	W1	W1	W1	W1	O (O/B)	W1	Y3	Y3
9	BO5	BO_5	W2	W2	O (O/B)	W3		Dehum	W2	W1	Y4
10	BO6	BO_6							Dehum	W2	W1
11	BO7	BO_7									W2
12	AO1	AO_1							Hum		
13	AO2	AO_2				W2 (0-10V)	W2 (0-10V)				
14	AO3	AO_3		Econo		Econo					
15	AI COM										
16	AI1	AI_1									
17	AI2	AI_2		OAT		OAT		WS	Supply RH high limit		
18	AI3	AI_3	SAT	SAT	SAT	SAT	SAT	SAT	SAT	SAT	SAT
19	AI4	AI_4									
20	AI5	AI_5									
21	A+ MS/TP										
22	B- MS/TP										

Rooftop Unit (RTU) – Wiring

Rooftop 2 Stages (RT 2STG)

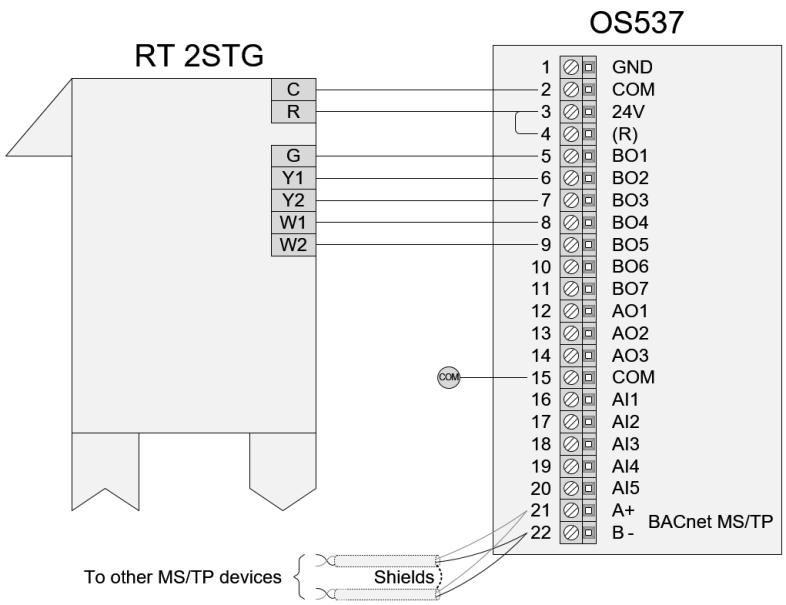

RT 2STG: Sets for an on/off fan, 2 on/off heat & 2 on/off cooling stages RTU unit

Notes:

- AI's can be configured for various options as per MSV2, 27, 28, 66 & 67.

Add a 24VAC transformer when the equipment does not supply the power.

Sequence of operation

Occupied Mode: Setpoints will revert to those defined by occupied cooling and heating setpoints.

Occupied Override Mode: The system will revert to occupied mode for the duration determined by the "OvrTime_Set AV-27" parameter.

On a call for cooling / System mode is Cooling or Auto: Cooling stages will be energized according to cooling demand AV-7 as per % threshold values to maintain room temperature. Heating outputs are not energized.

On a call for heating / System mode is Heating or Auto: Heating stages will be energized according to heating demand AV-6 as per % threshold values to maintain room temperature. Cooling outputs are not energized.

Fan operation: The fan will follow the fan mode setting (MSV-4 Fan Mode) in occupied mode. Fan On will make the fan run continuously during occupied hours. Fan Auto will only energize the fan on a call for a heating or cooling stage to be energized.

Note: Fan needs to be running 1 minute before cooling or heating stages can be energized. There is 3 minutes anti-cycling OFF delay on cooling and heating stages. There is 3 minutes delay if switching from cooling stages to heating stages (and vice versa). Also a 1 minute delay between each stage.

Add a 24VAC transformer when the equipment does not supply the power.

Rooftop Unit (RTU) – Wiring

Rooftop with Economizer (RT ECON)

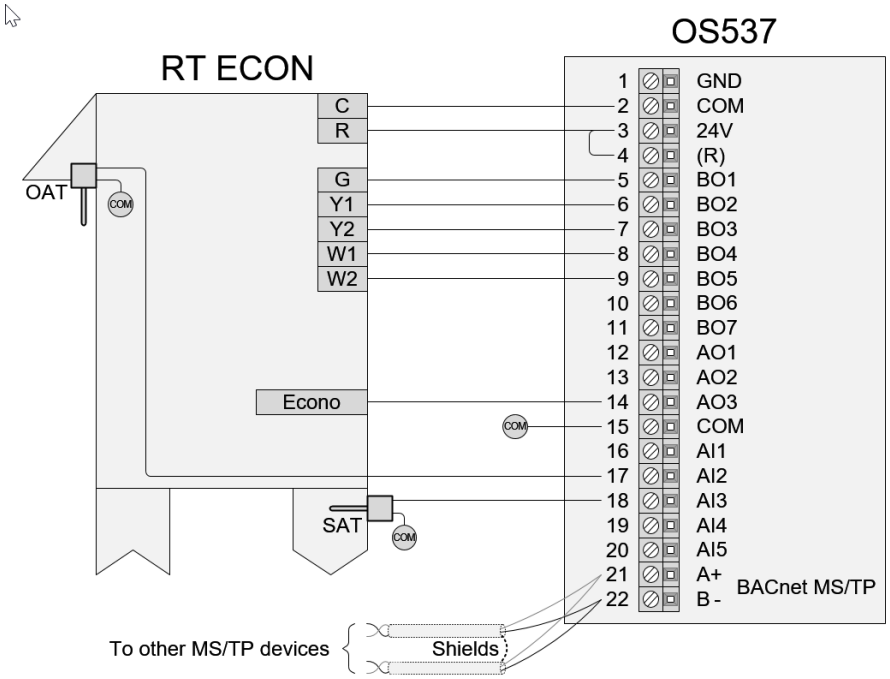

Add a 24VAC transformer when the equipment does not supply the power.

RT 2STG: Sets for an on/off fan, 2 on/off heat & 2 on/off cooling stages RTU unit.

Notes:

- AI's can be configured for various options as per MSV-2, 27, 28, 66 & 67.

Rooftop Unit (RTU) – Wiring

Sequence of operation

Occupied Mode: Setpoints will revert to those defined by occupied cooling and heating setpoints.

Occupied Override Mode: The system will revert to occupied mode for the duration determined by the "OvrTime_Set AV-27" parameter.

On a call for cooling / System mode is Cooling or Auto and OATemp (AV-29) > the economizer authorization value (AV-68): Cooling stages will be energized according to cooling demand AV7 as per % threshold values to maintain room temperature. Heating outputs are not energized.

On a call for cooling / System mode is Cooling or Auto and OATemp (AV-29) < the economizer authorization value (AV-68): Cooling stages will not be energized. Cooling will be provided by modulating the economizer's minimum position according to cooling demand AV-7. The supply temperature will be modulated between the SAT_CTR_Set setpoint AV-57 and the low limit setpoint SAT_LL_Set AV-58.

On a call for heating / System mode is Heating or Auto: Heating stages will be energized according to heating demand AV-6 as per % threshold values to maintain room temperature. Cooling outputs are not energized.

Fan operation: The fan will follow the fan mode setting (MSV-4 Fan Mode) in occupied mode. Fan On will make the fan run continuously during occupied hours. Fan Auto will only energize the fan on a call for a heating or cooling stage to be energized.

Note: Fan needs to be running 1 minute before cooling or heating stages can be energized. There is 3 minutes anti-cycling OFF delay on cooling and heating stages. There is 3 minutes delay if switching from cooling stages to heating stages (and vice versa). Also a 1 minute delay between each stage.

Economizer Sequence of Operation

The controller can be configured with the economizer option for free cooling. The two *Control Types* that can be configured are Off-Auto and Modulating control.

Dry Bulb

The economizer is enabled to utilize free cooling, and there is a call for cooling if the outside air temperature is greater than the

OAT EconoAuthorization setpoint. *OATeconOutAuth AV-68*.

When the control type is set to Off-Auto and the economizer is enabled, the output will energize the manufacturer's equipment economizer control.

When the control type is set for Modulating, the controller will modulate the outside air damper from minimum to 100% to maintain the *Minimum Supply Setpoint* SAT_LL_Set AV-58 at 100% demand call. When the demand call is 0%, the economizer will be set Off or Modulated to maintain the *Neutral Supply Setpoint* SAT_CTR_Set AV-57.

Enthalpy

If the calculated enthalpy is LESS than the enthalpy setpoint, and there is a cooling demand above 15%, the economizer will run in free cooling mode and when there is a cooling demand above 25%, our sequence allows compressor operation during economizer mode, which can be a way to save energy when we cool the outdoor air instead of the return air. This sequence requires an Outdoor Air sensor, a Supply Air sensor, a Mixed Air sensor and a Humidity input to run the Enthalpy Economizer sequence.

Rooftop Unit (RTU) – Wiring

Heat Pump 2 Stages (HP 2STG)

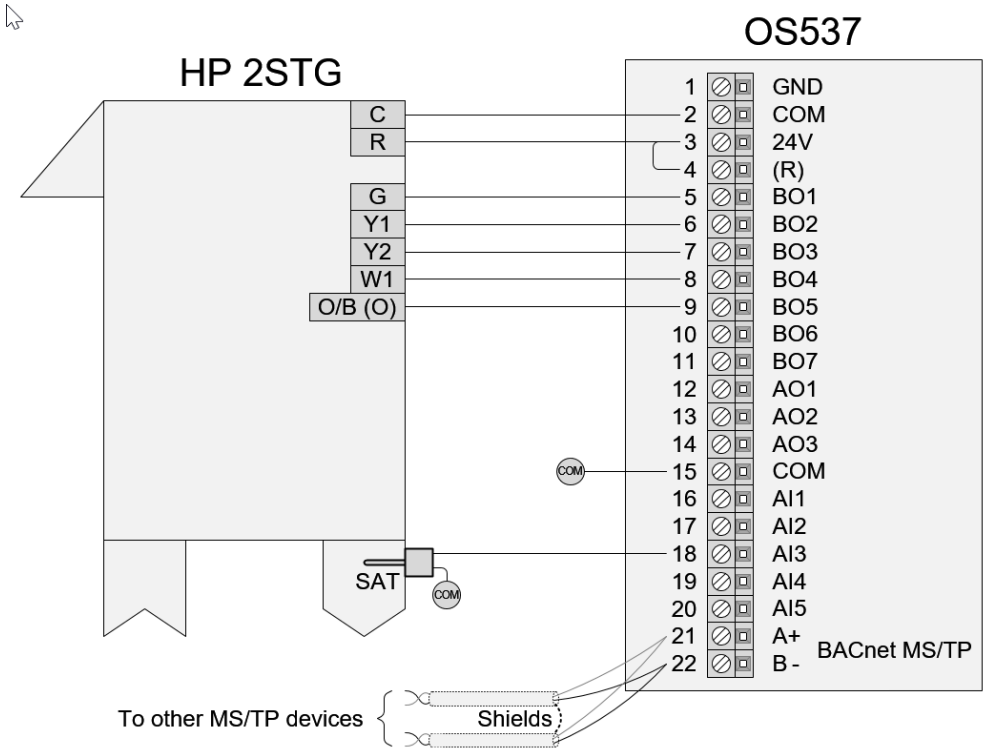

Add a 24VAC transformer when the equipment does not supply the power.

HP 2STG: Sets for an on/off fan, 2 on/off heat pump, 1 on/off reheat, 1 reversing valve HEATPUMP unit.

Notes:

- AI's can be configured for various options as per MSV-2, 27, 28, 66 & 67.

Rooftop Unit (RTU) – Wiring

Sequence of operation

Occupied Mode: Setpoints will revert to those defined by occupied cooling and heating setpoints.

Occupied Override Mode: The system will revert to occupied mode for the duration determined by the "OvrTime_Set AV-27" parameter.

On a call for cooling / System mode is Cooling or Auto and OATemp (AV-29) > the economizer authorization value (AV-68): Reversing valve will be set in cooling (default O setting). HPump stages will be energized according to cooling demand AV-7 as per % threshold values to maintain room temperature. Heating outputs are not energized.

On a call for cooling / System mode is Cooling or Auto and OATemp (AV-29) < the economizer authorization value (AV-68): Heat pump stages will not be energized. Cooling will be provided by modulating the economizer's minimum position according to cooling demand AV-7. The supply temperature will be modulated between the economizer center setpoint AV-57 and the low limit setpoint AV-58.

On a call for heating / System mode is Heating or Auto: The reversing valve will be set in heating / non-energized (default O setting). Heat pump stages will be energized according to heating demand AV-6 as per % threshold values to maintain room temperature.

Fan operation: The fan will follow the fan mode setting (MSV-4 Fan Mode) in occupied mode. Fan On will make the fan run continuously during occupied hours. Fan Auto will only energize the fan on a call for a heating or cooling stage to be energized.

Note: Fan needs to be running 1 minute before cooling or heating stages can be energized. There is 3 minutes anti-cycling OFF delay on cooling and heating stages. There is 3 minutes delay if switching from cooling stages to heating stages (and vice versa). Also a 1 minute delay between each stage.

Rooftop Unit (RTU) – Wiring

Rooftop Indoor Air Quality (RT IAQ)

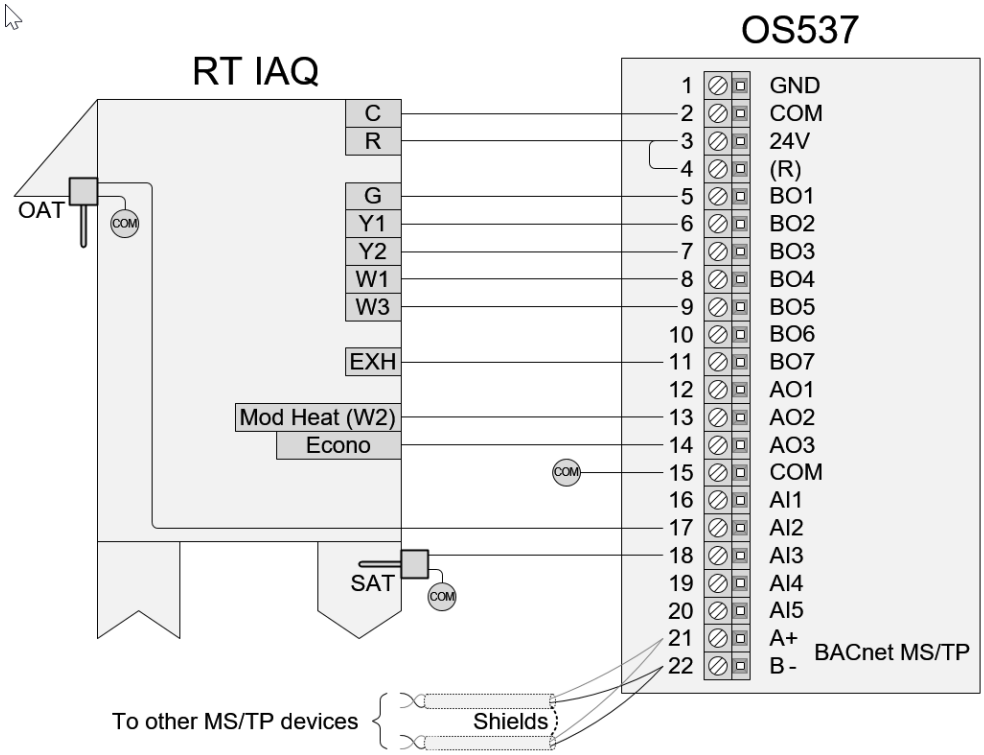

Add a 24VAC transformer when the equipment does not supply the power.

RT IAQ: Sets for an on/off fan, 2 on/off heat, 2 on/off cooling stages with 0-10 VDC economizer RTU unit. *CO2 model needed.*

Notes:

- AI's can be configured for various options as per MSV-2, 27, 28, 66 & 67.

Rooftop Unit (RTU) – Wiring

Sequence of operation

Occupied Mode: Setpoints will revert to those defined by occupied cooling and heating setpoints.

Occupied Override Mode: The system will revert to occupied mode for the duration determined by the "OvrTime_Set AV-27" parameter.

On a call for cooling / System mode is Cooling or Auto and OATemp (AV-29) > the economizer authorization value (AV-68): Cooling stages will be energized according to cooling demand AV7 as per % threshold values to maintain room temperature. Heating outputs are not energized.

On a call for cooling / System mode is Cooling or Auto and OATemp (AV-29) < the economizer authorization value (AV-68): Cooling stages will not be energized. Cooling will be provided by modulating the economizer's minimum position according to cooling demand AV-7. The supply temperature will be modulated between the economizer center SAT_CTR_Set setpoint AV-57 and the low limit setpoint SAT_LL_Set AV-58.

On a call for heating / System mode is Heating or Auto: Heating stages will be energized according to heating demand AV-6 as per % threshold values to maintain room temperature. Cooling outputs are not energized. On a call for IAQ control due to CO2 levels: The system must be in occupied mode. You must have CO2 model. The fresh air economizer will open based on CO2 levels AI8 against the CO2 setpoint AV-31. The economizer will modulate from its minimum position to its max CO2 AV-66 position level as per settings.

Fan operation: The fan will follow the fan mode setting (MSV-4 Fan Mode) in occupied mode. Fan On will make the fan run continuously during occupied hours. Fan Auto will only energize the fan on a call for a heating or cooling stage to be energized.

Note: Fan needs to be running 1 minute before cooling or heating stages can be energized. There is 3 minutes anti-cycling OFF delay on cooling and heating stages. There is 3 minutes delay if switching from cooling stages to heating stages (and vice versa). Also a 1 minute delay between each stage.

Rooftop Unit (RTU) – Wiring

Rooftop with 0-10VDC SCR electric heating (RT MOD)

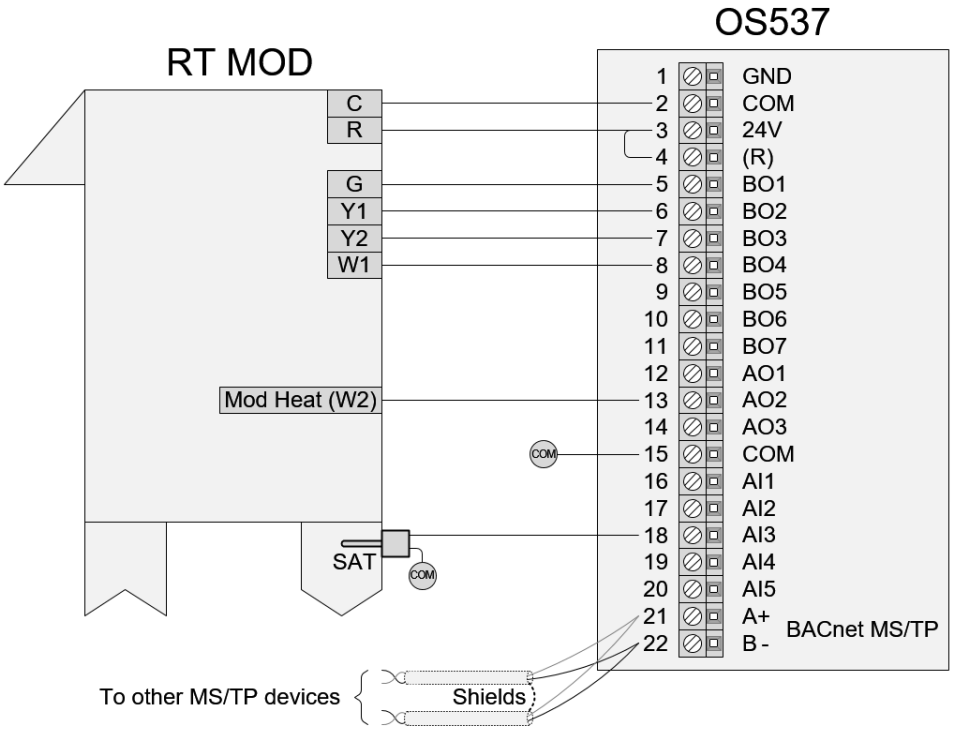

Add a 24VAC transformer when the equipment does not supply the power.

RT MOD: Sets for an on/off fan, 1 on/off heat, 2 on/off cooling stages with 0-10 VDC heating RTU unit.

Notes:

- AI's can be configured for various options as per MSV-2, 27, 28, 66 & 67.

Rooftop Unit (RTU) – Wiring

Sequence of operation

Occupied Mode: Setpoints will revert to those defined by occupied cooling and heating setpoints.

Occupied Override Mode: The system will revert to occupied mode for the duration determined by the "OvrTime_Set AV-27" parameter.

On a call for cooling / System mode is Cooling or Auto: Cooling stages will be energized according to cooling demand AV-7 as per % threshold values to maintain room temperature. Heating outputs are not energized.

On a call for heating / System mode is Heating or Auto: Modulating heating output and On/Off stage(s) will energize as per % threshold according to heating demand AV-6 values to maintain room temperature. Cooling outputs are not energized.

Fan operation: The fan will follow the fan mode setting (MSV-4 Fan Mode) in occupied mode. Fan On will make the fan run continuously during occupied hours. Fan Auto will only energize the fan on a call for a heating or cooling stage to be energized.

Note: Fan needs to be running 1 minute before cooling or heating stages can be energized. There is 3 minutes anti-cycling OFF delay on cooling and heating stages. There is 3 minutes delay if switching from cooling stages to heating stages (and vice versa). Also a 1 minute delay between each stage.

Rooftop Unit (RTU) – Wiring

Heat Pump with Dehumidification Output (HP DEH)

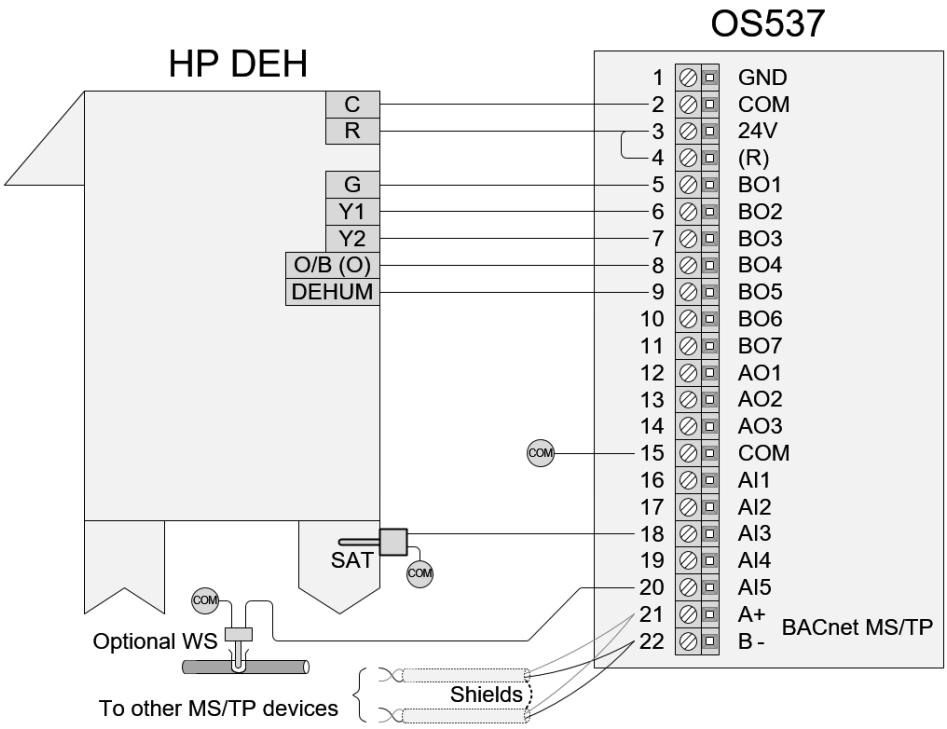

Add a 24VAC transformer when the equipment does not supply the power.

HP DEH: Sets for an on/off fan, 2 on/off heat pump, 1 on/off dehumidification, 1 reversing valve stages HEATPUMP unit.

Notes:

- BO6 is an on/off dehumidification output that follows dehumidification demand.
- AI's can be configured for various options as per MSV-2, 27, 28, 66 & 67.

Rooftop Unit (RTU) – Wiring

Sequence of operation

Occupied Mode: Setpoints will revert to those defined by occupied cooling and heating setpoints.

Occupied Override Mode: The system will revert to occupied mode for the duration determined by the "OvrTime_Set AV-27" parameter.

On a call for cooling / System mode is Cooling or Auto: The reversing valve will be set in cooling (default O setting). Heat pump stages will be energized according to cooling demand AV-7 as per % threshold values to maintain room temperature. Heating outputs are not energized.

On a call for heating / System mode is Heating or Auto: The reversing valve will be set in heating / non-energized (default O setting). Heat pump stages will be energized according to heating demand AV-6 as per % threshold values to maintain room temperature.

Dehumidification Call: Active in any control mode. If the room humidity rises above the dehumidification setpoint, the dehumidification command will be sent to the Heat Pump unit. The dehumidification command will be canceled if the room humidity drops below the dehumidification setpoint.

Fan operation: The fan will follow the fan mode setting (MSV-4 Fan Mode) in occupied mode. Fan On will make the fan run continuously during occupied hours. Fan Auto will only energize the fan on a call for a heating or cooling stage to be energized

Note: Fan needs to be running 1 minute before cooling or heating stages can be energized. There is 3 minutes anti-cycling OFF delay on cooling and heating stages. There is 3 minutes delay if switching from cooling stages to heating stages (and vice versa). Also a 1 minute delay between each stage.

Rooftop Unit (RTU) – Wiring

Humidifier-Dehumidifier (HUM-DEH)

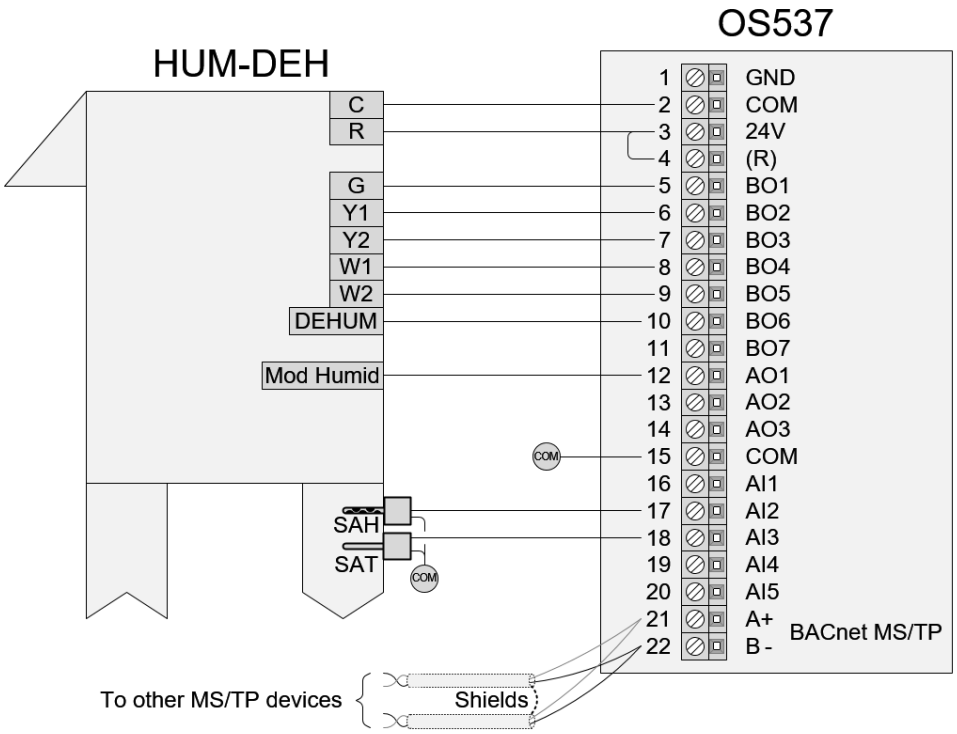

Add a 24VAC transformer when the equipment does not supply the power.

HUM-DEH: Sets for an on/off fan, 2 on/off heat, 2 on/off cooling, 1 on/off dehumidification stage with 0-10 VDC humidifier RTU unit.

Notes:

- BO6 is an on/off dehumidification output that follows dehumidification demand.
- AO1 is a 0-10 VDC humidification output that follows humidification demand.
- AI's can be configured for various options as per MSV-2, 27, 28, 66 & 67.

Rooftop Unit (RTU) – Wiring

Sequence of operation

Occupied Mode: Setpoints will revert to those defined by occupied cooling and heating setpoints.

Occupied Override Mode: The system will revert to occupied mode for the duration determined by "OvrTime_Set AV-27".

On a call for cooling / System mode is Cooling or Auto: Cooling stages will be energized according to cooling demand AV-7 as per % threshold values to maintain room temperature. Heating outputs are not energized.

On a call for heating / System mode is Heating or Auto: Heating stages will be energized according to heating demand AV-6 as per % threshold values to maintain room temperature. Cooling outputs are not energized.

Dehumidification Call: Active in any control mode. If the room humidity rises above the dehumidification setpoint, the dehumidification command will be sent to the Heat Pump unit. The dehumidification command will be canceled if the room humidity drops below the dehumidification setpoint.

Humidification Call: Active in heating mode only. The analog modulating humidifier will be modulated to maintain the room humidity setpoint. If a supply humidity sensor [MSV-54 location] is installed, the humidifier will throttle down to prevent the supply humidity from rising above the Supply RH high limit setpoint [AV-54].

Fan operation: The fan will follow the fan mode setting (MSV-4 Fan Mode) in occupied mode. Fan On will make the fan run continuously during occupied hours. Fan Auto will only energize the fan on a call for a heating or cooling stage to be energized.

Note: Fan needs to be running 1 minute before cooling or heating stages can be energized. There is 3 minutes anti-cycling OFF delay on cooling and heating stages. There is 3 minutes delay if switching from cooling stages to heating stages (and vice versa). Also a 1 minute delay between each stage.

Rooftop Unit (RTU) – Wiring

Rooftop 3 Stages (RT 3STG)

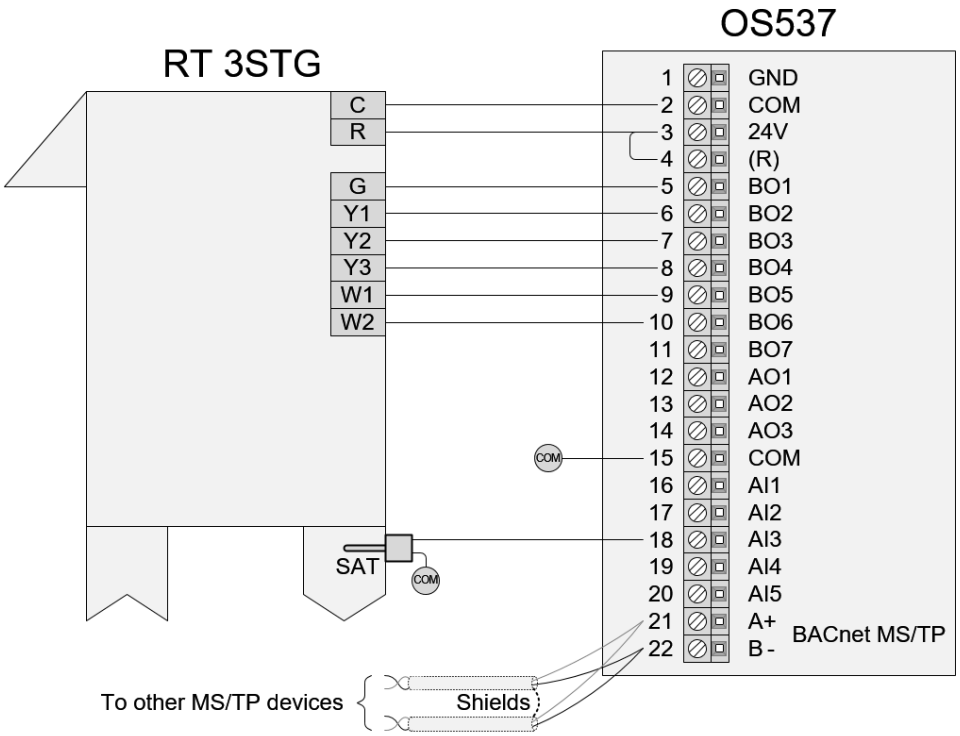

Add a 24VAC transformer when the equipment does not supply the power.

RT 3STG: Sets for an on/off fan, 2 on/off heat & 3 on/off cooling stages RTU unit.

Notes:

- AI's can be configured for various options as per MSV-2, 27, 28, 66 & 67.

Rooftop Unit (RTU) – Wiring

Sequence of operation

Occupied Mode: Setpoints will revert to those defined by occupied cooling and heating setpoints.

Occupied Override Mode: The system will revert to occupied mode for the duration determined by the "OvrTime_Set AV-27" parameter.

On a call for cooling / System mode is Cooling or Auto: Cooling stages will be energized according to cooling demand AV-7 as per % threshold values to maintain room temperature. Heating outputs are not energized.

On a call for heating / System mode is Heating or Auto: Heating stages will be energized according to heating demand AV-6 as per % threshold values to maintain room temperature. Cooling outputs are not energized.

Fan operation: The fan will follow the fan mode setting (MSV-4 Fan Mode) in occupied mode. Fan On will make the fan run continuously during occupied hours. Fan Auto will only energize the fan on a call for a heating or cooling stage to be energized.

Note: Fan needs to be running 1 minute before cooling or heating stages can be energized. There is 3 minutes anti-cycling OFF delay on cooling and heating stages. There is 3 minutes delay if switching from cooling stages to heating stages (and vice versa). Also a 1 minute delay between each stage.

Rooftop Unit (RTU) – Wiring

Rooftop 4 Stages (RT 4STG)

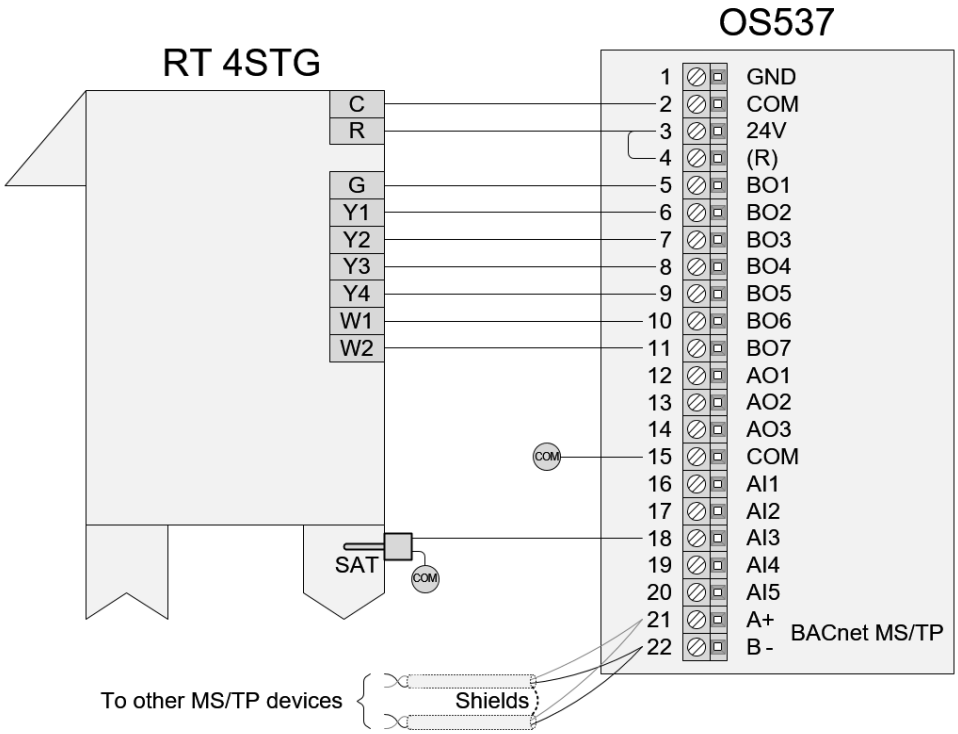

Add a 24VAC transformer when the equipment does not supply the power.

RT 4STG: Sets for an on/off fan, 2 on/off heat & 4 on/off cooling stages RTU unit.

Notes:

- AI's can be configured for various options as per MSV-2, 27, 28, 66 & 67.

Rooftop Unit (RTU) – Wiring

Sequence of operation

Occupied Mode: Setpoints will revert to those defined by occupied cooling and heating setpoints.

Occupied Override Mode: The system will revert to occupied mode for the duration determined by the "OvrTime_Set AV-27" parameter.

On a call for cooling / System mode is Cooling or Auto: Cooling stages will be energized according to cooling demand AV-7 as per % threshold values to maintain room temperature. Heating outputs are not energized.

On a call for heating / System mode is Heating or Auto: Heating stages will be energized according to heating demand AV-6 as per % threshold values to maintain room temperature. Cooling outputs are not energized.

Fan operation: The fan will follow the fan mode setting (MSV-4 Fan Mode) in occupied mode. Fan On will make the fan run continuously during occupied hours. Fan Auto will only energize the fan on a call for a heating or cooling stage to be energized.

Note: Fan needs to be running 1 minute before cooling or heating stages can be energized. There is 3 minutes anti-cycling OFF delay on cooling and heating stages. There is 3 minutes delay if switching from cooling stages to heating stages (and vice versa). Also a 1 minute delay between each stage.

Rooftop Unit (RTU) – Wiring

RTU Control Curves

RT 2STG

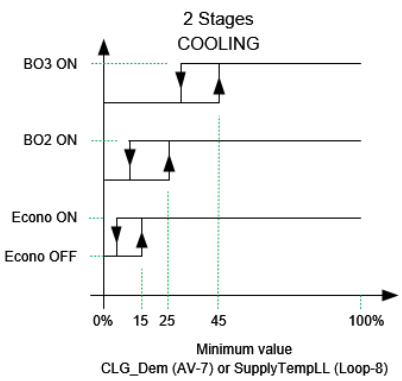

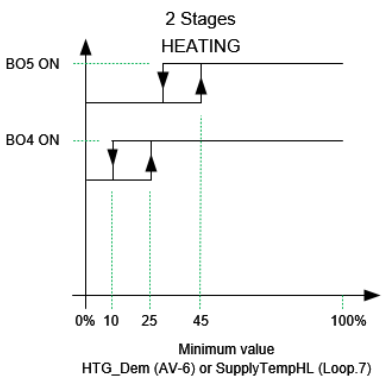

RT 3STG

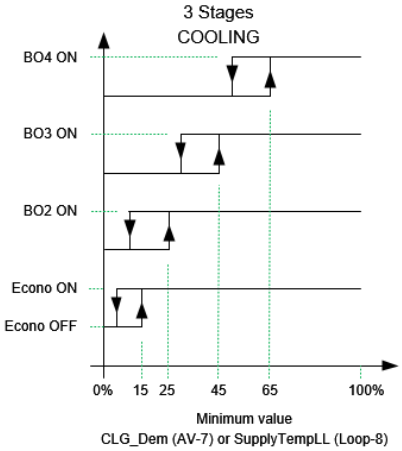

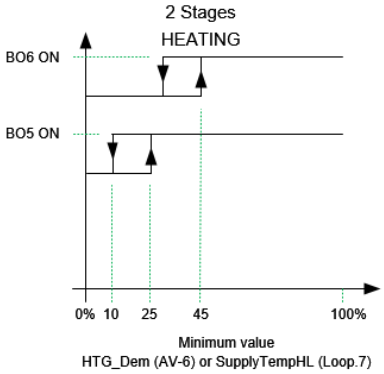

RT 4STG

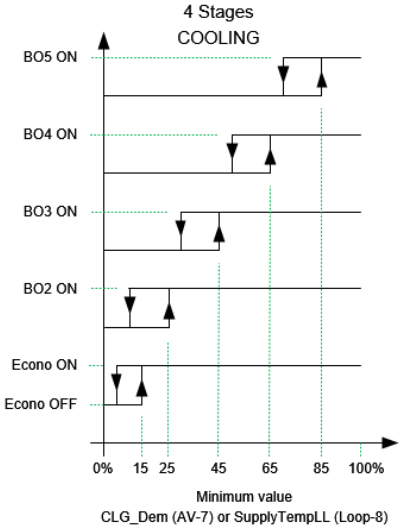

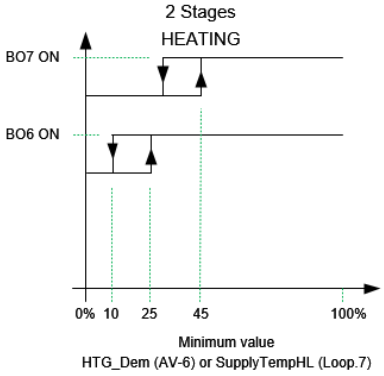

Rooftop Unit (RTU) – Wiring

Heat Pump

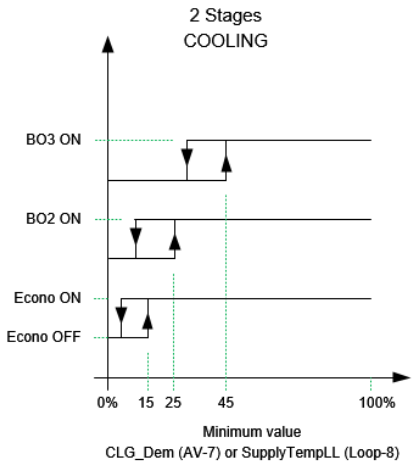

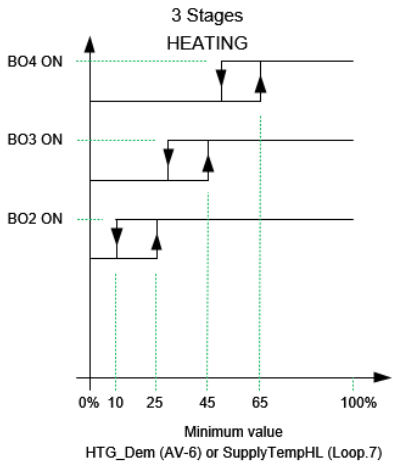

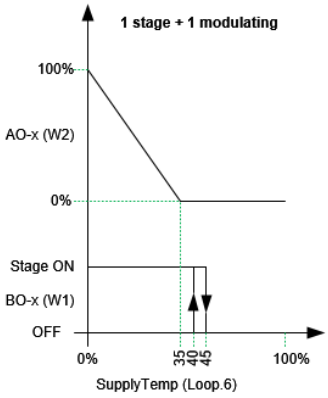

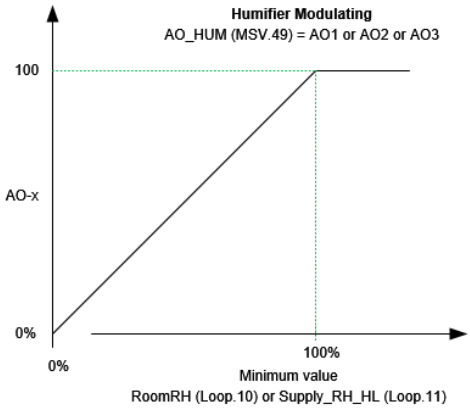

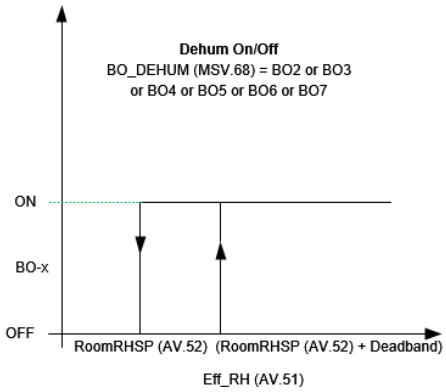

Rooftop Unit (RTU) – Wiring

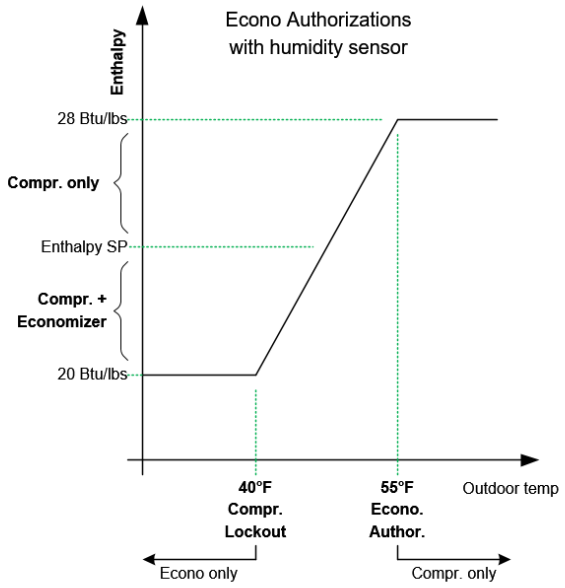

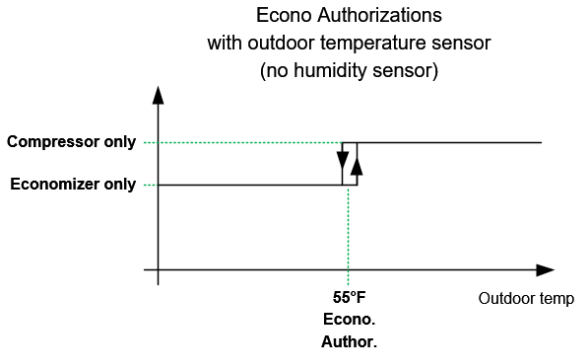

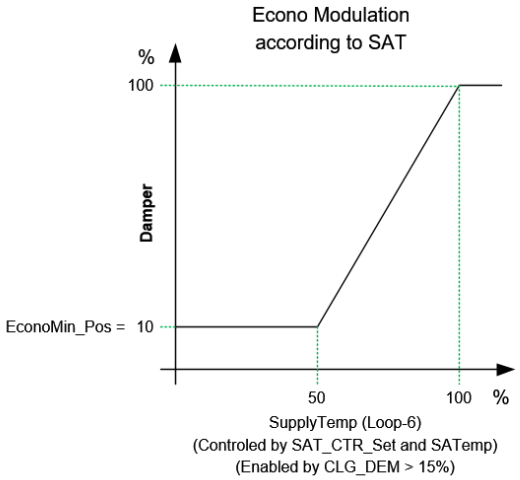

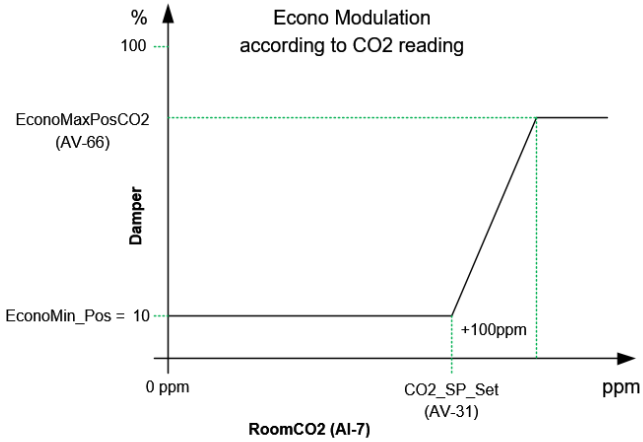

Rooftop Unit (RTU)

SETUP

Setup Menu

1. Access the Setup Menu by holding the two left buttons.

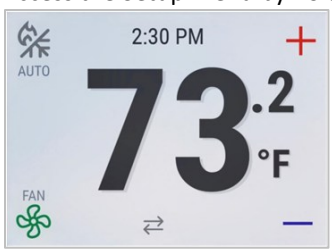

2. Press these PIN keys in sequence: The top left button twice and the top right button once

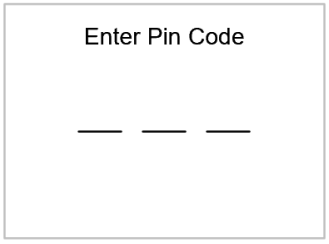

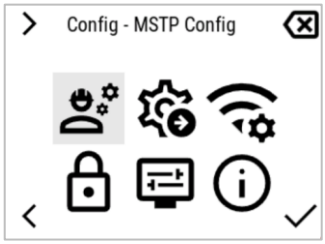

	MSTP Communication Configuration
	Quick RTU Application Setup
	WIFI Configuration
	Buttons Lock Configuration
	Display Configuration
	Display Additional Information About the OpenStat
< >	Scroll Menu Choices
✓	Select
	Exit Menus

Rooftop Unit (RTU)

3. Config - MSTP Config

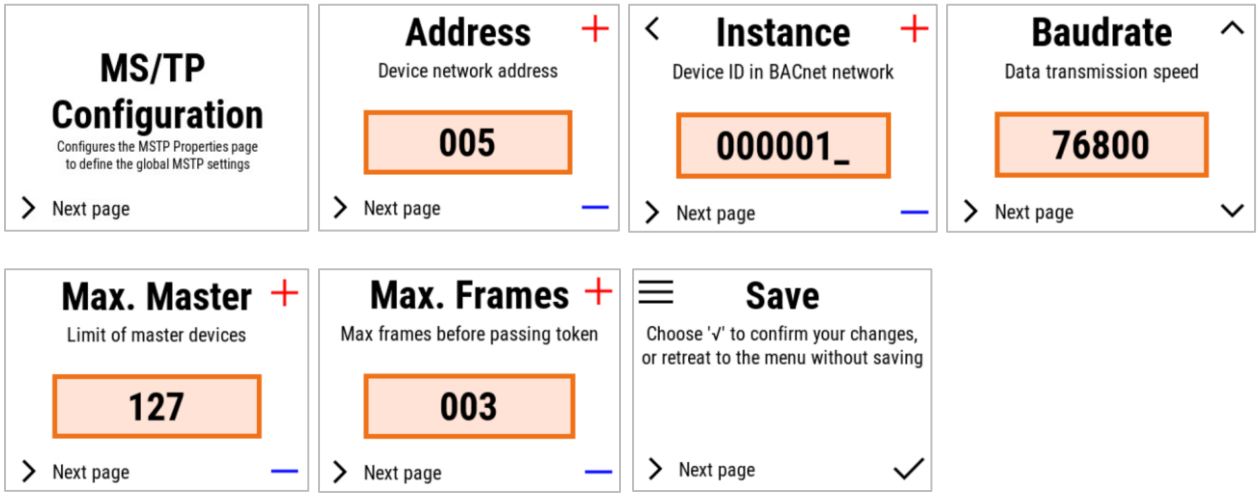

4. Config – Quick Setup

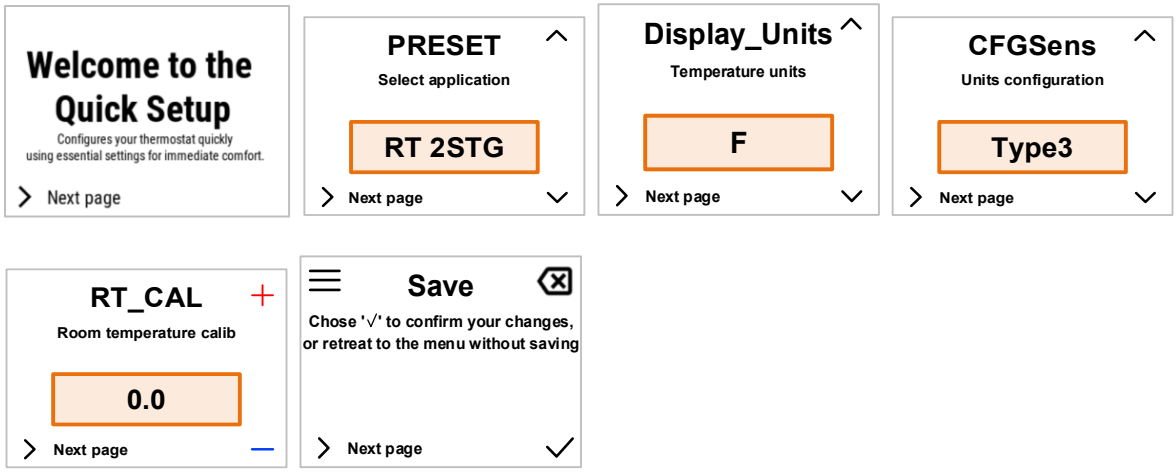

Rooftop Unit (RTU)

5. Config – WIFI Settings (Refer to separate document “OpenStat Series - WIFI User Guide” for more info)

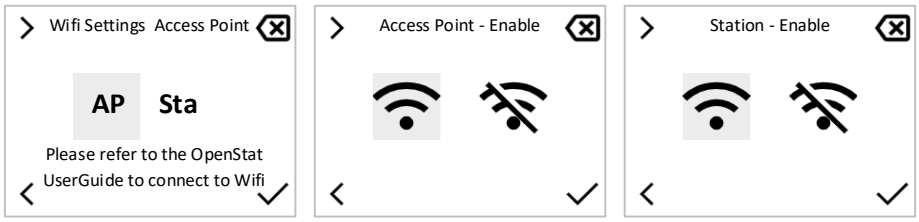

6. Config - Lock Type

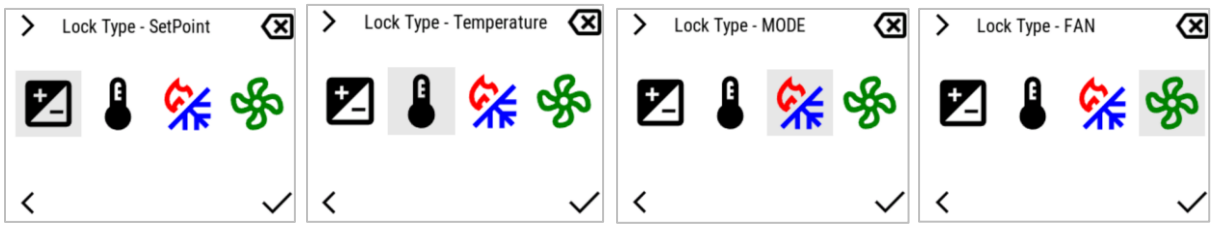

7. Config Display

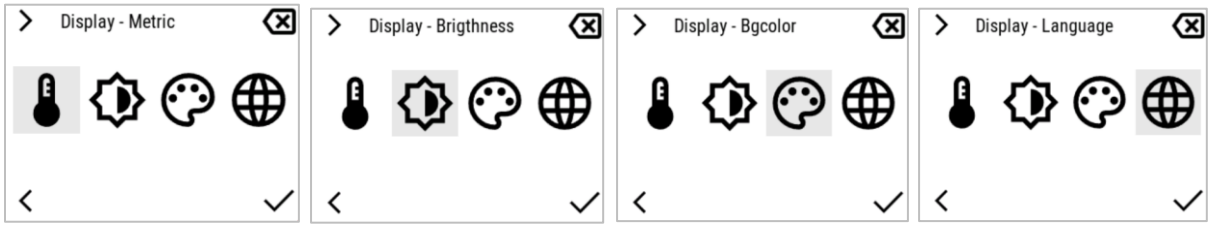

8. Config – About

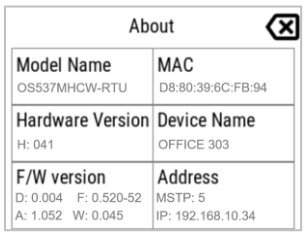

Rooftop Unit (RTU)

BACnet Objects

Overview

GREEN = Important | No Color = Optional depending on equipment

Recommended: MSVs and AV(s) write at default priority (16), everything else priority 8 to 3

Quick Setup: Presets, units, and service inputs
- **MSV-1** 10K remote sensor type
- **MSV-64** Temperature units
- **MSV-66** AI-1 alarm input
- **MSV-67** AI-2 alarm input
- **MSV-127** Application preset (see the user guide for configurations and I/O)

Fan: Output location and control type
- **MSV-27** Output location and control type
- **AV-21** ECM minimum speed
- **AV-24** Minimum on time

Heating: Stage configuration
- **MSV-16 thru 19** W1 thru W4 control type
- **AV-56** Maximum supply set point at 100% heating demand
- **AV-57** Neutral supply set point

Cooling: Stage configuration
- **MSV-7 thru 10** Y1 thru Y4 control type
- **AV-58** Minimum supply set point at 100% cooling demand

Exhaust Fan: Output and setpoints
- **MSV-32** Exhaust fan output and control type

CO2: Setpoint
- **AV-31** CO2 set point

Humidifier: Sensor and output locations, set points
- **MSV-48** Humidifier output locations (BO)
- **MSV-49** Humidifier output locations (AO)
- **MSV-52** Indoor humidity sensor input
- **MSV-54** Supply air humidity sensor input
- **MSV-55** Supply air humidity sensor input type
- **MSV-68** Dehumidification output location
- **AV-52** Humidify set point
- **AV-54** Supply air humidity high limit set point
- **AV-55** Dehumidify set point

T Set points: Sensor locations and set points
- **MSV-2** Room temperature sensor location
- **MSV-27** Outdoor air temperature sensor location
- **MSV-28** Supply air temperature sensor location
- **MSV-62** Determines how AV-37 deadband is applied to AV-1 set point
- **AV-1** Room temperature set point
- **AV-19** Supply freeze set point
- **AV-33** Minimum cooling set point (AV-1)
- **AV-34** Maximum heating set point (AV-1)
- **AV-37** Room temperature deadband
- **AV-38** Unoccupied cooling set point
- **AV-39** Unoccupied heating set point
- **AV-40** Standby mode cooling offset (positive only)
- **AV-41** Standby mode heating offset (negative only)
- **AV-67** Aux. heating authorization OAT set point

Rooftop Unit (RTU)

Economizer: Control type and setpoints

- **MSV-30** Output location and control type
- **MSV-57** Outdoor humidity sensor input
- **MSV-58** Mixed air temperature input
- **AV-60** Compressor lockout outdoor air temperature setpoint
- **AV-65** Economizer minimum position
- **AV-66** Economizer maximum position when CO2 is above setpoint
- **AV-68** Economizer authorization OAT set point
- **AV-77** Enthalpy setpoint (20-28 BTU/lbs range)
- **AV-78** Mixed air temperature set point

Motion/Override: Location and timer

- **MSV-44** Motion sensor input and control type
- **AV-27** Motion and push button override time

Scheduler: Schedule location

- **MSV-45** Schedule location

PID Loops:

- **Loop-1** Cooling PID
- **Loop-2** Heating PID
- **Loop-6** Supply PID
- **Loop-7** Supply high-limit PID
- **Loop-8** Supply low-limit PID
- **Loop-10** Room humidity PID
- **Loop-11** Supply humidity high limit PID

General Operation and Monitoring: Occupancy, status, and set points

- **MSV-3** System mode (heat, cool, auto, off)
- **MSV-4** Fan mode (auto, on)
- **MSV-100** Help message (alarm status)
- **BV-5** Occupancy schedule (write to for occupancy)
- **AV-1** Room temperature set point
- **AV-6** Heating demand
- **AV-7** Cooling demand
- **AV-9** Effective room temperature
- **AV-16** Supply air temperature
- **AV-29** Outdoor air temperature
- **AV-42** Effective cooling set point
- **AV-43** Effective heating set point
- **AV-51** Room relative humidity

Input and Outputs: Status for inputs and overrides outputs

- **AI-1 thru AI-5** Analog/binary inputs (read-only)
- **AO-1 thru AO-4** Analog outputs
- **BO-1 thru BO-7** Binary outputs

Rooftop Unit (RTU)

Physical Inputs and Outputs

OBJECT INSTANCE	RTU OBJECT NAME	DESCRIPTION	DEFAULT VALUE	TAGS	RANGE
BO-1	BO_1	***1**	Off	Status	Dependent on MSV-127 config
BO-2	BO_2	***1**	On	Status	Dependent on MSV-127 config
BO-3	BO_3	***1**	Off	Status	Dependent on MSV-127 config
BO-4	BO_4	***1**	Off	Status	Dependent on MSV-127 config
BO-5	BO_5	***1**	Off	Status	Dependent on MSV-127 config
BO-6	BO_6	***1**	Off	Status	Dependent on MSV-127 config
BO-7	BO_7	***1**	Off	Status	Dependent on MSV-127 config
AO-1	AO_1	***1**	0%	Status	Dependent on MSV-127 config
AO-2	AO_2	***1**	0%	Status	Dependent on MSV-127 config
AO-3	AO_3	***1**	0%	Status	Dependent on MSV-127 config
AI-1	AI_1	***2**		Status	Dependent on many MSV choices
AI-2	AI_2	***2**		Status	Dependent on many MSV choices
AI-3	AI_3	***2**		Status	Dependent on many MSV choices
AI-4	AI_4	***2**		Status	Dependent on many MSV choices
AI-5	AI_5	***2**		Status	Dependent on many MSV choices
AI-6	RoomT	Room temperature	N/A	Status	32-122°F (0-50°C)
AI-7	RoomRH	Room humidity	N/A	Status	5-90%
AI-8 *3	RoomCO2	Room CO2		Status	0-2000 PPM
BI-1	Motion	Motion detection	Off	Status	On / Off

***1** *The configuration of MSV-127 automatically generates BACnet object descriptions for all the BOs and AOs and will refresh automatically when BV-4 = On.*

***2** BACnet object descriptions will be autogenerated according to miscellaneous MSV choices selected (when BV-4 = On)*

*Objects tagged as **Status** represent objects or properties typically meant to be displayed on graphics for various required visualizations.*

***3** RoomCO2 only available on "C" models like "OS537MHC"*

Analog Values (AV)

OBJECT INSTANCE	RTU OBJECT NAME	DESCRIPTION	TAGS	DEFAULT VALUE	RANGE
AV-1	RoomTSP	Room Temperature setpoint	Cfg	72°F (22°C)	54-90°F (12-32°C)
AV-6	HTG_Dem	Heating demand	Status	---	0-100%
AV-7	CLG_Dem	Cooling demand	Status	---	0-100%
AV-9	Eff_T	Effective temperature used for control	Status	---	-40-122°F (-40-50°C)
AV-16	SATemp	Supply air temperature	Status	---	-40-122°F (-40-50°C)
AV-19	SATFRSP_Set	Set supply freezing temperature	Cfg	38°F (3°C)	-40-122°F (-40-50°C)
AV-21	ECM_min_Set	Fan analog min. output	Cfg	0%	0-100%
AV-24	Fan_MinOn_Time	Fan minimum ON time	Cfg	1 min	0-60 min
AV-27	OvrTime_Set	Set occupancy override time	Cfg	60 min	0-480 min
AV-29	OATemp	Outdoor air temperature	Status	---	-40-122°F (-40-50°C)
AV-31	CO2_SP_Set	Set CO2 Setpoint	Cfg	800 PPM	0-2000 PPM
AV-33	MinCLSP	Set minimum cooling setpoint	Cfg	59°F (15°C)	54-100°F (12-37.5°C)
AV-34	MaxHTSP	Set maximum heating setpoint	Cfg	82°F (28°C)	40-90°F (4.5-32°C)
AV-35	OccCLSP	Set occupied cooling setpoint	Status	73°F (23°C)	
AV-36	OccHTSP	Set occupied heating setpoint	Status	71°F (21°C)	
AV-37	SP_DB_Set	Set deadband	Cfg	2°	2 to 5°
AV-38	Unoc_CL_Set	Set unoccupied cooling setpoint	Cfg	79°F (26°C)	
AV-39	Unoc_HT_Set	Set unoccupied heating setpoint	Cfg	65°F (18°C)	
AV-40	STBCoolOffset	Set standby cooling offset (+)	Cfg	+ 2°	2 to 5°
AV-41	STBHeatOffset	Set standby heating offset (-)	Cfg	- 2°	-2 to -5°
AV-42	EffCLSP	Effective cooling setpoint	Status	---	
AV-43	EffHTSP	Effective heating setpoint	Status	---	
AV-50	RT_Cal	Room temperature calib	Cfg	0.0	-5.0 to 5.0
AV-51	Eff_RH	Effective humidity used for control	Status	---	0-100%
AV-52	HUM_SP	Set humidity setpoint	Cfg	25%	0-100%
AV-53	SAH	Supply humidity reading	Status	---	0-100%
AV-54	SAH_HL_Set	Supply humidity high limit setpoint	Cfg	75%	50-98%
AV-55	DEH_SP	Set dehum setpoint	Cfg	60%	0-100%
AV-56	SAT_HL_Set	Set supply air high limit setpoint	Cfg	104°F (40°C)	0.0-140°F (0.0-60°C)
AV-57	SAT_CTR_Set	Set supply air neutral setpoint	Cfg	68°F (20°C)	0.0-140°F (0.0-60°C)
AV-58	SAT_LL_Set	Set supply air low limit setpoint	Cfg	55°F (13°C)	0.0-140°F (0.0-60°C)
AV-59	Eff_SAT	Effective supply air calc. setpoint	Status	---	0.0-140°F (0.0-60°C)
AV-60	ComprLockout	Compressor Lockout	Cfg	40°F (4°C)	0.0-140°F (0.0-60°C)
AV-65	EconoMin_Pos	Eco min position	Cfg	10%	0-100%

OBJECT INSTANCE	RTU OBJECT NAME	DESCRIPTION	TAGS	DEFAULT VALUE	RANGE
AV-66	EconoMaxCO2Pos	Econo max position (for CO2)	Cfg	100%	0-100%
AV-67	OATheatOutAuth	Heating authorization (from OAT)	Cfg	70°F (13°C)	0.0-140°F (0.0-60°C)
AV-68	OATeconOutAuth	Economizer authorization (from OAT)	Cfg	50°F (13°C)	0.0-140°F (0.0-60°C)
AV-75	OAH	Outside air humidity	Status	---	0-100%
AV-76	OAE	Outside air enthalpy	Status	---	10-55 BTU/lbs
AV-77	EnthSP	Enthalpy setpoint	Cfg	22 BTU/lbs	20-28 BTU/lbs
AV-78	MATSP	Mixed air temperature for economizer	Cfg	65°F (18°C)	0.0-140°F (0.0-60°C)
AV-79	MAT	Mixed air temperature	Status	---	0.0-140°F (0.0-60°C)

Please note that objects tagged as:

- **Cfg:** represents configuration properties of the device that are typically only set once during commissioning and start-up.
- **Status:** represent objects or properties typically meant to be displayed on graphics for various required visualizations.

Binary Values (BV)

OBJECT INSTANCE	RTU OBJECT NAME	DESCRIPTION	TAGS	DEFAULT VALUE	INACTIVE / ACTIVE TEXT
BV-2	OVRSTAT	Occupancy override status	Status	Normal	Normal / Override
BV-3	Mot_Det	Motion detection	Status	None	None / Moving
BV-4	AutogenDesc	Autogenerate I/O descriptions	Cfg	On	Off / On
BV-5	Occ_Sch	System occupancy schedule	Status	On	Off / On
BV-7	Freeze_Status	Freeze condition status	Status	Normal	Normal / Active
BV-8	Free_CL_Status	Free cooling authorization status	Status	---	No / Yes
BV-21	EnthalpyAuth	Enthalpy Authorize	Status	---	No / Yes

Please note that objects tagged as:

- **Cfg:** represents configuration properties of the device that are typically only set once during commissioning and start-up.
- **Status:** represent objects or properties typically meant to be displayed on graphics for various required visualizations.

Multi-State Values (MSV)

OBJECT INSTANCE	RTU OBJECT NAME	DESCRIPTION	TAGS	DEFAULT VALUE	STATE TEXTS
MSV-1	CFGSens	Remote thermistor 10K	Cfg	Type 3	Type 3 Type 2
MSV-2	AI_RS	Select room temperature input	Cfg	Intern	Intern AI-1 AI-2 AI-3 AI-4 AI-5
MSV-3	MODE	System mode	Cfg	Off	Off Auto Cool Heat
MSV-4	FAN	Set fan mode	Cfg	Auto	On Auto
MSV-5	Eff_Occ	Effective occupancy mode	Status	---	Occupied Unoccup TempOcc Standby
MSV-6	Occ_Cmd	Occupancy command	Cfg	Loc-Occ	Loc-Occ Occupied Unoccup
MSV-7	CFG_Y1	Set cooling output 1 operation	Cfg	None	None Off-On 0-10V DA (*direct*) 0-10V RA (*reversed*) 2-10V DA (*direct*) 2-10V RA (*reversed*) Pulsed DA (*direct*) Pulsed RA (*reversed*)
MSV-8	CFG_Y2	Set cooling output 2 operation	Cfg	None	*Same as above*
MSV-9	CFG_Y3	Set cooling output 3 operation	Cfg	None	None Off-On
MSV-10	CFG_Y4	Set cooling output 4 operation	Cfg	None	None Off-On
MSV-16	CFG_W1	Set heating output 1 operation	Cfg	None	None Off-On 0-10V DA (*direct*) 0-10V RA (*reversed*) 2-10V DA (*direct*) 2-10V RA (*reversed*) Pulsed DA (*direct*) Pulsed RA (*reversed*) O (*O/B*) B (*O/B*)
MSV-17	CFG_W2	Set heating output 2 operation	Cfg	None	*Same as above*
MSV-18	CFG_W3	Set heating output 3 operation	Cfg	None	None Off-On

OBJECT INSTANCE	RTU OBJECT NAME	DESCRIPTION	TAGS	DEFAULT VALUE	STATE TEXTS
MSV-19	CFG_W4	Set heating output 4 operation	Cfg	None	None Off-On
MSV-23	CFG_FAN	Select fan output	Cfg	BO1	BO-1 BO-2 AO-1 AO-2 BO-1 & AO-1 BO-1 & AO-2
MSV-27	AI_OAT	Select outside air temp. input	Cfg	None	None AI-1 AI-2 AI-3 AI-4 AI-5 External
MSV-28	AI_SAT	Select supply air temp. input	Cfg	None	*Same as above*
MSV-30	AO_ECO	Select economizer output	Cfg	None	None BO-5 BO-6 BO-7 AO-1 AO-2 AO-3
MSV-32	CFG_EXH	Select power exhaust output	Cfg	None	None BO-6 BO-7 AO-3 BO-6 & AO-3 BO-7 & AO-3
MSV-44	BI_PIR	Select PIR Motion sensor input	Cfg	Intern	None NO, AI1 (BI) NC, AI1 (BI) NO, AI2 (BI) NC, AI2 (BI) NO, AI3 (BI) NC, AI3 (BI) NO, AI4 (BI) NC, AI4 (BI) External Intern
MSV-45	BI_SCH_Input	Select schedule input	Cfg	None (ON)	None (Off) None (On) Scheduler AI-1 AI-2 AI-3 AI-4 AI-5 External

OBJECT INSTANCE	RTU OBJECT NAME	DESCRIPTION	TAGS	DEFAULT VALUE	STATE TEXTS
MSV-48	BO_HUM	Select humidifier BO output	Cfg	None	None BO-2 BO-3 BO-4 BO-5 BO-6 BO-7 BO-5 & BO-6 (*Two stages*) BO-6 & BO-7 (*Two stages*)
MSV-49	AO_HUM	Select humidifier AO output	Cfg	None	None AO-1 AO-2 AO-3
MSV-52	AI_RH	Select room humidity input	Cfg	Intern	None AI-1 AI-2 AI-3 AI-4 AI-5 External Intern
MSV-54	AI_SRH	Select supply humidity input	Cfg	None	None AI-1 AI-2 AI-3 AI-4 AI-5 External
MSV-55	AIC_SRH	Set supply humidity input signal	Cfg	0-10V	0-10V 2-10V
MSV-57	OAH_Loc	Outside humidity physical input loc.	Cfg	None	None AI-1 AI-2 AI-3 AI-4 AI-5 External Intern
MSV-58	MAT_Loc	Mixed air temperature sensor loc.	Cfg	None	None AI-1 AI-2 AI-3 AI-4 AI-5 External
MSV-62	CFGSetp	Room setpoint displayed	Cfg	Center	Heat SP Center Cool SP

OBJECT INSTANCE	RTU OBJECT NAME	DESCRIPTION	TAGS	DEFAULT VALUE	STATE TEXTS
MSV-65	BO_OCC	Select occupied output	Cfg	None	None BO-2 BO-3 BO-4 BO-5 BO-6 BO-7 AO-1 AO-2 AO-3
MSV-66	AI1_CFG	Select predefined AI1 logic	Cfg	None	None NSB OVR FILTER SERVICE FANSTATUS
MSV-67	AI2_CFG	Select predefined AI2 logic	Cfg	None	None NSB OVR FILTER SERVICE FANSTATUS
MSV-68	BO_DEHU	Select dehumidification output	Cfg	None	None BO-2 BO-3 BO-4 BO-5 BO-6 BO-7
MSV-70	PB	CFG Heating/cooling proportional band	Cfg	5F 2.2C	3F 1.2C 4F 1.7C 5F 2.2C 6F 2.8C 7F 3.3C 8F 3.5C 9F 5.0C 10F 5.6C
MSV-100	HELP_mess	Help message	Status	Normal	Normal FanLock SupplyFrozen Service Filter Rem NSB Ovr
MSV-127	Preset	Select application	Cfg	RT 2STG	RT 2STG RT ECON HP 2STG RT IAQ RT MOD HP DEH HUM-DEH RT 3STG RT 4STG HP 3STG
MSV-200	Brightness	Brightness Control	Cfg	Med	Low Med-Low Med

OBJECT INSTANCE	RTU OBJECT NAME	DESCRIPTION	TAGS	DEFAULT VALUE	STATE TEXTS
MSV-201	BgColor	Background Color	Cfg	White	White Orange Blue Green Red
MSV-202	LockTemp	Main Display	Cfg	Temp	Temp Setpoint Nothing
MSV-203	Language	Language selection	Cfg	English	English French
MSV-204	Display_Units	Temperature displayed units	Cfg	F	C F

*MSV-7, 8, 9, 10, 16, 17, 18, 19, 23, 27, 28, 30, 32, 44, 45, 48, 49, 52, 54, 55, 65 & 68 are used for "custom" configuration applications. Make sure MSV127 is set to "custom" **BEFORE** setting any of those MSVs*

Please note that objects tagged as:

- **Cfg:** represents configuration properties of the device that are typically only set once during commissioning and start-up.
- **Status:** represent objects or properties typically meant to be displayed on graphics for various required visualizations.

Loop(s)

OBJECT INSTANCE	FCU OBJECT NAME	DESCRIPTION	TAGS	DEFAULT VALUE	RANGE
LOOP-1	RoomT_Cool	Room temp cooling control loop	Status		0-100%
LOOP-2	RoomT_heat	Room temp heating control loop	Status		0-100%
LOOP-6	SupplyTemp	Supply temp control loop	Status		0-100%
LOOP-7	SupplyTempHL	Supply temp high limit control loop	Status		0-100%
LOOP-8	SupplyTempLL	Supply temp low limit control loop	Status		0-100%
LOOP-10	Room_RH	Room RH control loop	Status		0-100%
LOOP-11	Supply_RH_HL	Supply RH hi limit control loop	Status		0-100%
LOOP-12	PidMAT	Mix air T control for economizer	Status		0-100%

Default values:

Loop-1 : Kp = 20, Ki = 0.05, Bias = 0%

Loop-2 : Kp = 20, Ki = 0.05, Bias = 0%

Loop-6 : Kp = 5, Ki = 0.1, Bias = 50%

Loop-7 : Kp = 5, Ki = 0.1, Bias = 50%

Loop-8 : Kp = 20, Ki = 0.05, Bias = 0%

Loop-10 : Kp = 20, Ki = 0.05, Bias = 0%

Loop-11 : Kp = 10, Ki = 0.05, Bias = 0%

Loop-12 : Kp = 5, Ki = 0.1, Bias = 50%

Schedule

OBJECT INSTANCE	FCU OBJECT NAME	DESCRIPTION	TAGS	DEFAULT VALUE	RANGE
SCH-1	OccSchedule	Occupancy schedule	Cfg	Inactive	Inactive / Active

Fan Coil Unit (FCU)

Wiring

FCU Select Your Equipment

4 Pipes – Modulating 0-10 VDC Valves
4 Pipes – Floating valves
4 Pipes – On/Off N.C. Valves
4 Pipes – On/Off N.O. Valves
2 Pipes – Modulating 0-10 VDC Valves
2 Pipes – Floating Valves
2 Pipes – On/Off N.C.
2 Pipes – On/Off N.O.
Fan Control – ECM (0-10VDC) MSV58 = On-Auto
Fan Control – 3 Speed Fans MSV58 = L-M-H
Fan Control – 2 Speed Fans MSV58 = L-H
Fan Control – Single Speed Fans MSV58 = On-Auto

Connector	I/O id	BACnet Name	4 Pipes 0-10Vdc Valves	4 Pipes Floating Valves	4 Pipes N.C. Valves	4 Pipes N.O. Valves	2 Pipes 0-10Vdc Valves	2 Pipes Floating Valves	2 Pipes N.C. Valves	2 Pipes N.O. Valves	Fan ECM 0-10Vdc	Fan 3 Speeds	Fan 2 Speeds	Fan 1 Speed
1	GND													
2	COM													
3	24V													
4	(R)													
5	BO1	BO_1		Open Cool	Cool N.C. Valve			Open Cool/heat	Cool/Heat N.C. Valve					
6	BO2	BO_2		Close Cool		Cool N.O. Valve		Close Cool/Heat		Cool/Heat N.C. Valve				
7	BO3	BO_3		Open Heat	Heat N.C. Valve									
8	BO4	BO_4		Open Heat		Heat N.O. Valve	Auxiliary Reheat							
9	BO5	BO_5	Fan High									Fan High	Fan High	Fan High
10	BO6	BO_6	Fan Med									Fan Med		
11	BO7	BO_7	Fan Low									Fan Low	Fan Low	
12	AO1	AO_1	Fan ECM								Fan ECM			
13	AO2	AO_2	Cool				Cool/Heat							
14	AO3	AO_3	Heat											
15	AI COM													
16	AI1	AI_1	Options AI1: Remote NSB, Motion N.O., Motion, N.C., Window contact											
17	AI2	AI_2	Options AI2: Door contact, Override, Filter, Service											
18	AI3	AI_3	Options AI3: Changeover contact (COC) Normally heat, (COC) Normally cool, Changeover sensor (COS) 10K type 3, Supply sensor (SS) 10K type 3											
19	AI4	AI_4	Option remote room temperature sensor (auto detect)											
20	AI5	AI_5	Option Fan Status Configure MSV-50											
21	A+ MS/TP													
22	B- MS/TP													

Fan Coil Unit (FCU) – Wiring

4 Pipes – Modulating 0-10 VDC Valves

Sequence of operation

Occupied Mode: Setpoints will revert to those defined by occupied cooling and heating setpoints.

Unoccupied Mode: Setpoints will revert to those defined by unoccupied heating and cooling setpoints.

Occupied Override Mode: The system will revert to occupied mode for the duration determined by the "OvrTime" parameter.

Cooling Call: The cooling valve will be modulated to maintain room temperature. The heating valve is closed.

Heating Call: The heating valve will be modulated to maintain room temperature. The cooling valve is closed.

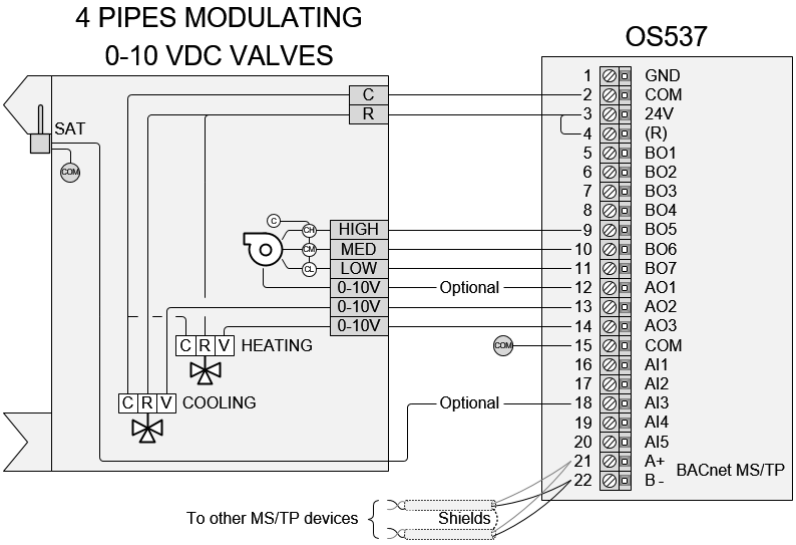

Add a 24VAC transformer when the equipment does not supply the power.

Fan Coil Unit (FCU) – Wiring

4 Pipes – Floating valves

Sequence of operation

Occupied Mode: Setpoints will revert to those defined by occupied cooling and heating setpoints.

Unoccupied Mode: Setpoints will revert to those defined by unoccupied heating and cooling setpoints.

Occupied Override Mode: The system will revert to occupied mode for the duration determined by the "OvrTime" parameter

Cooling Call: The cooling valve will be modulated to maintain room temperature. The heating valve is closed.

Heating Call: The heating valve will be modulated to maintain room temperature. The cooling valve is closed.

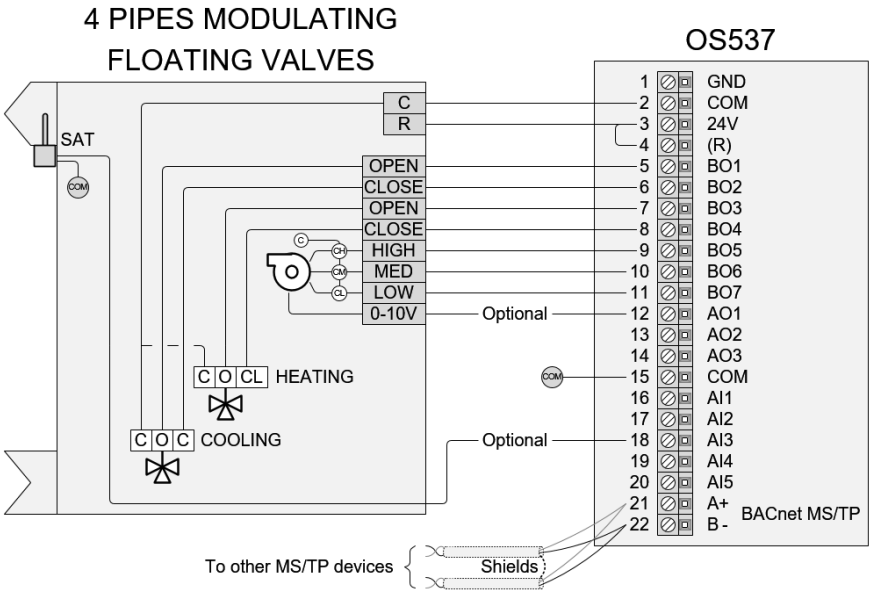

Add a 24VAC transformer when the equipment does not supply the power.

Fan Coil Unit (FCU) – Wiring

4 Pipes – On/Off N.C. Valves

Sequence of operation

Occupied Mode: Setpoints will revert to those defined by occupied cooling and heating setpoints.

Unoccupied Mode: Setpoints will revert to those defined by unoccupied heating and cooling setpoints.

Occupied Override Mode: The system will revert to occupied mode for the duration determined by the "OvrTime" parameter.

Cooling Call: The cooling valve will open to maintain room temperature. The heating valve is closed.

Heating Call: The heating valve will open to maintain room temperature. The cooling valve is closed.

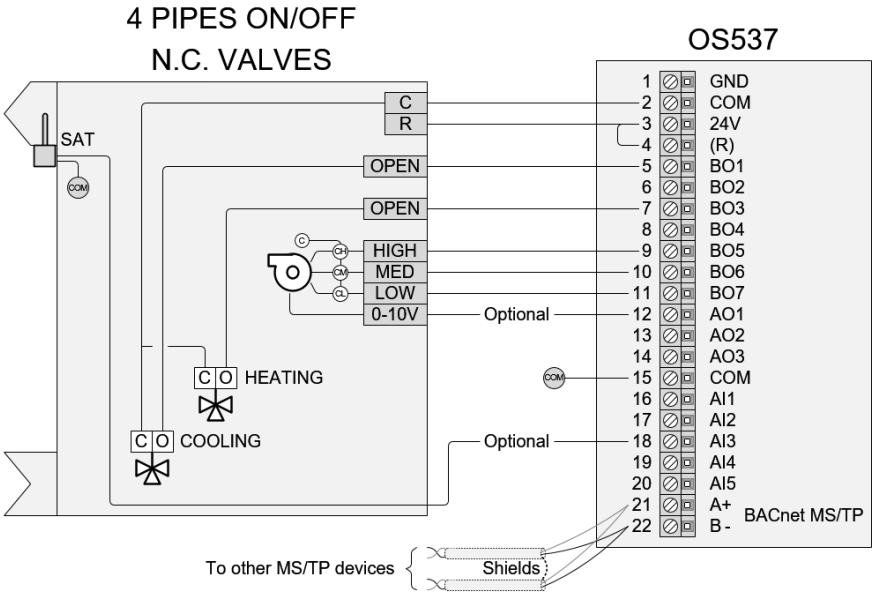

Add a 24VAC transformer when the equipment does not supply the power.

Fan Coil Unit (FCU) – Wiring

4 Pipes – On/Off N.O. Valves

Sequence of operation

Occupied Mode: Setpoints will revert to those defined by occupied cooling and heating setpoints.

Unoccupied Mode: Setpoints will revert to those defined by unoccupied heating and cooling setpoints.

Occupied Override Mode: The system will revert to occupied mode for the duration determined by the "OvrTime" parameter.

Cooling Call: The cooling valve will open to maintain room temperature. The heating valve is closed.

Heating Call: The heating valve will open to maintain room temperature. The cooling valve is closed.

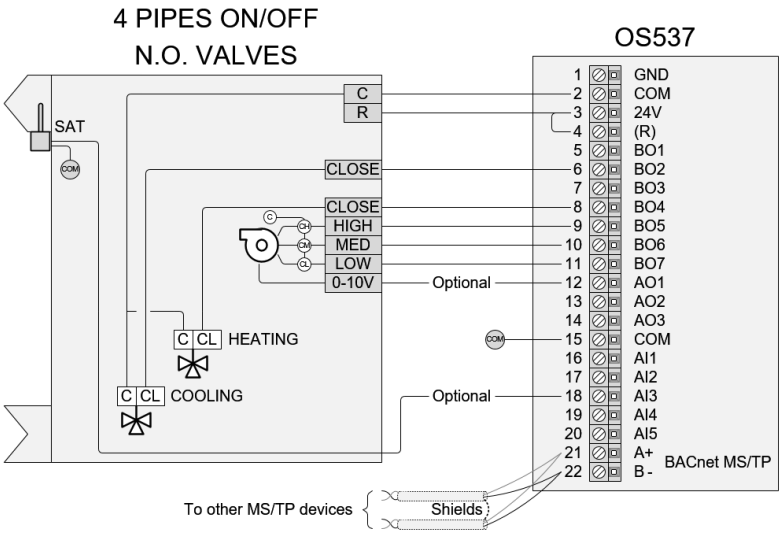

Add a 24VAC transformer when the equipment does not supply the power.

Fan Coil Unit (FCU) – Wiring

2 Pipes – Modulating 0-10 VDC Valves

Sequence of operation

Occupied Mode: Setpoints will revert to those defined by occupied cooling and heating setpoints.

Unoccupied Mode: Setpoints will revert to those defined by unoccupied heating and cooling setpoints.

Occupied Override Mode: The system will revert to occupied mode for the duration determined by the "OvrTime" parameter.

Cooling Call: If the supply water temperature is less than 63°F (17.0°C) AV-13, the valve will be modulated to maintain room temperature. If the supply water temperature exceeds 65°F (18.5°C) AV-13, the valve will close.

Heating Call: If the supply water temperature exceeds 65°F (18.5°C) AV-13, the valve will be modulated to maintain room temperature. If the supply water temperature is less than 63°F (17.0°C) AV-13, the valve will close.

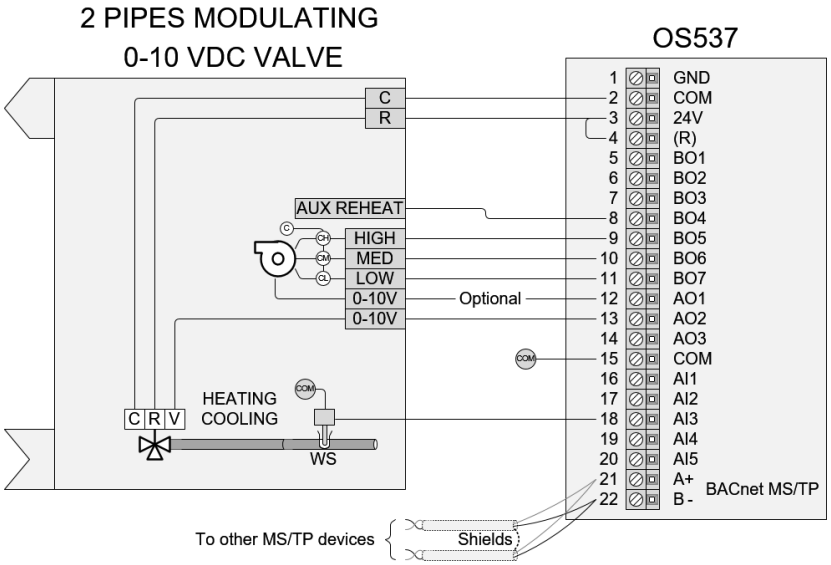

Add a 24VAC transformer when the equipment does not supply the power.

Fan Coil Unit (FCU) – Wiring

2 Pipes – Floating Valves

Sequence of operation

Occupied Mode: Setpoints will revert to those defined by occupied cooling and heating setpoints.

Unoccupied Mode: Setpoints will revert to those defined by unoccupied heating and cooling setpoints.

Occupied Override Mode: The system will revert to occupied mode for the duration determined by the "OvrTime" parameter

Cooling Call: If the supply water temperature is less than 63°F (17.0°C) AV-13, the valve will be modulated to maintain room temperature. If the supply water temperature exceeds 65°F (18.5°C) AV-13, the valve will close.

Heating Call: If the supply water temperature exceeds 65°F (18.5°C) AV-13, the valve will be modulated to maintain room temperature. If the supply water temperature is less than 63°F (17.0°C) AV-13, the valve will close

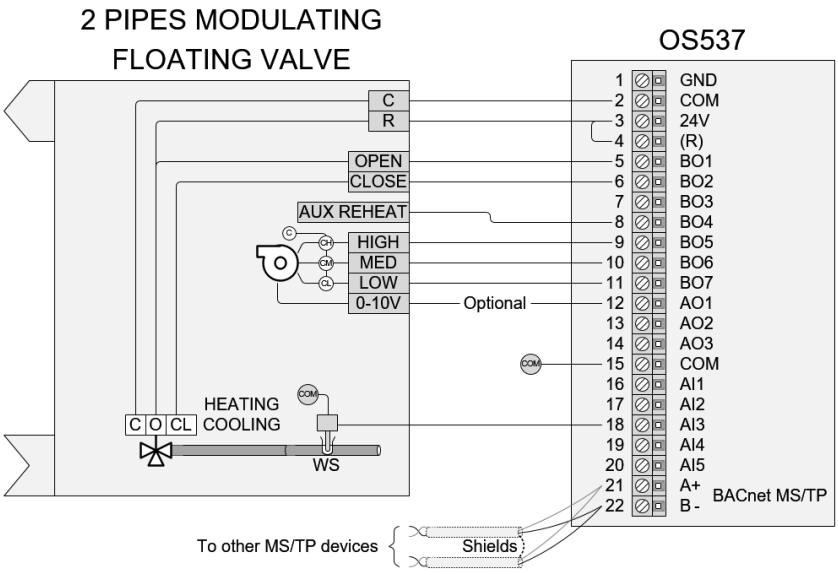

Add a 24VAC transformer when the equipment does not supply the power.

Fan Coil Unit (FCU) – Wiring

2 Pipes – On/Off N.C.

Sequence of operation

Occupied Mode: Setpoints will revert to those defined by occupied cooling and heating setpoints.

Unoccupied Mode: Setpoints will revert to those defined by unoccupied heating and cooling setpoints.

Occupied Override Mode: The system will revert to occupied mode for the duration determined by the "OvrTime" parameter

Cooling Call: If the supply water temperature is less than 63°F (17.0°C) AV-13, the valve will open to maintain room temperature. If the supply water temperature exceeds 65°F (18.5°C) AV-13, the valve will close.

Heating Call: If the supply water temperature exceeds 65°F (18.5°C) AV-13, the valve will open to maintain room temperature. If the supply water temperature is less than 63°F (17.0°C) AV-13, the valve will close.

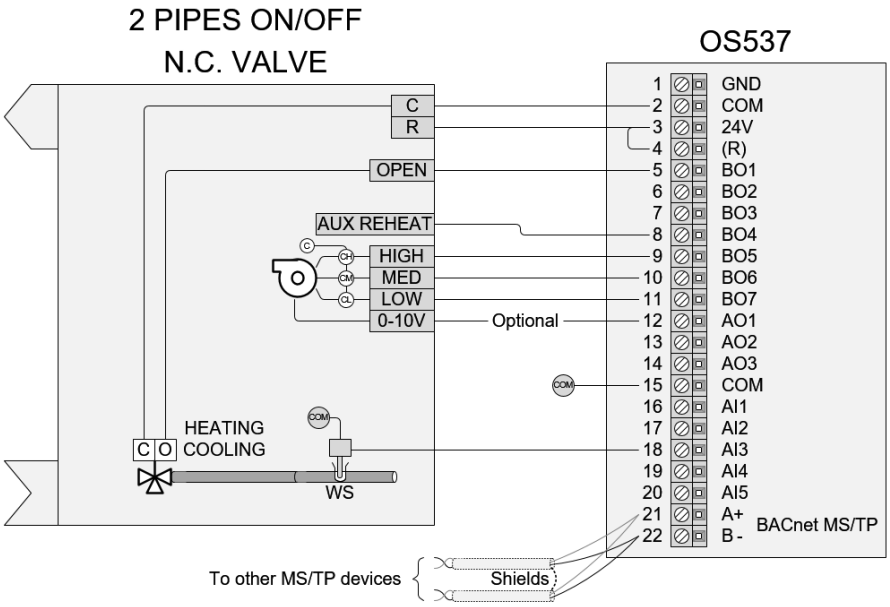

Add a 24VAC transformer when the equipment does not supply the power.

Fan Coil Unit (FCU) – Wiring

2 Pipes – On/Off N.O.

Sequence of operation

Occupied Mode: Setpoints will revert to those defined by occupied cooling and heating setpoints.

Unoccupied Mode: Setpoints will revert to those defined by unoccupied heating and cooling setpoints.

Occupied Override Mode: The system will revert to occupied mode for the duration determined by the "OvrTime" parameter

Cooling Call: If the supply water temperature is less than 63°F (17.0°C) AV-13, the valve will open to maintain room temperature. If the supply water temperature exceeds 65°F (18.5°C) AV-13, the valve will close.

Heating Call: If the supply water temperature exceeds 65°F (18.5°C) AV-13, the valve will open to maintain room temperature. If the supply water temperature is less than 63°F (17.0°C) AV-13, the valve will close.

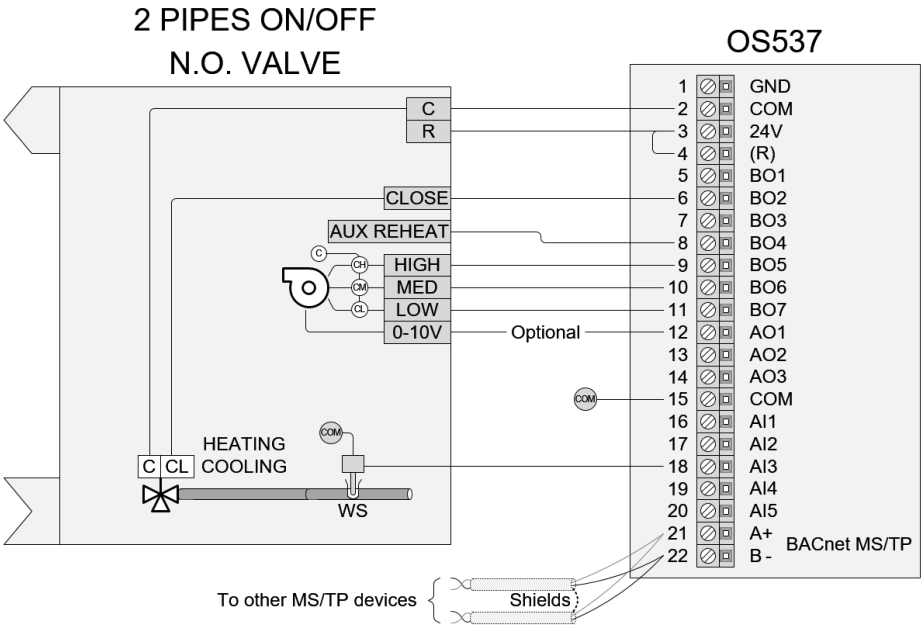

Add a 24VAC transformer when the power is not supplied by the equipment.

Fan Coil Unit (FCU) – Wiring

Fan Control – ECM (0-10VDC) MSV-58 = On-Auto

Fan sequence of operation

Occupied Mode:

Fan = **Auto** mode will modulate the fan from the minimum set fan speed (AV-25 ECM_min) to 100% simultaneously with the main PI cooling and heating demand.

With the fan mode set to **ON**, the fan will drive directly to 100% demand.

In the controller deadband between heating and cooling setpoints, Auto demand (Keepfan BV-66) = Fan Low allows the fan to stay at the minimum set fan speed, and (Keepfan BV-66) = Fan Off will shut down the fan completely.

Unoccupied Mode:

The fan will always operate in Auto mode during Unoccupied periods.

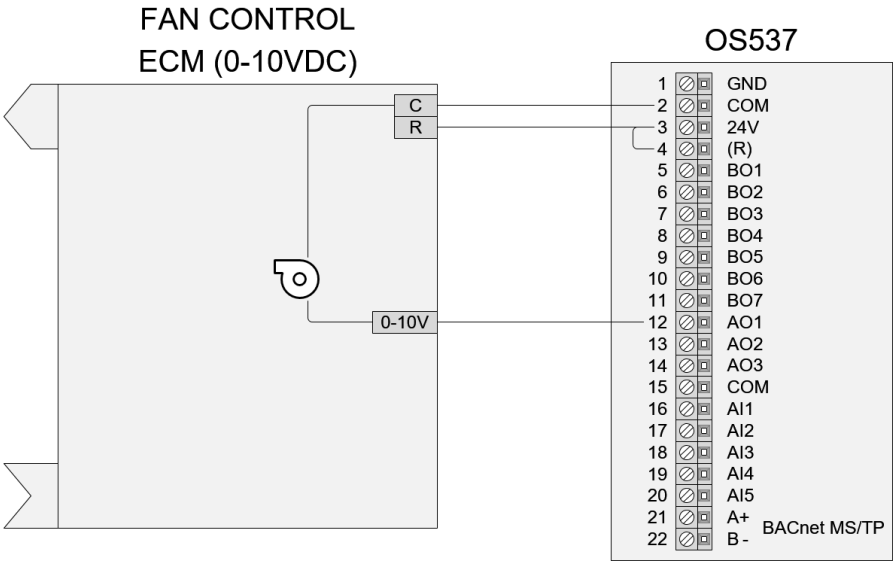

Add a 24VAC transformer when the equipment does not supply the power.

Fan Coil Unit (FCU) – Wiring

Fan Control – 3 Speed Fans MSV-58 = L-M-H

Occupied Mode:

With the fan mode set to **Low**, the fan will drive to Low speed.

With the fan mode set to **Medium**, the fan will drive to Medium speed.

With the fan mode set to **High**, the fan will drive to High speed.

In the controller deadband between heating and cooling setpoints, Auto demand (Keepfan BV-66) = FanLow allows the fan to stay at Low fan speed, and (Keepfan BV-66) = FanOff will shut down the fan completely.

Unoccupied Mode:

The fan will always operate in Auto mode during Unoccupied periods.

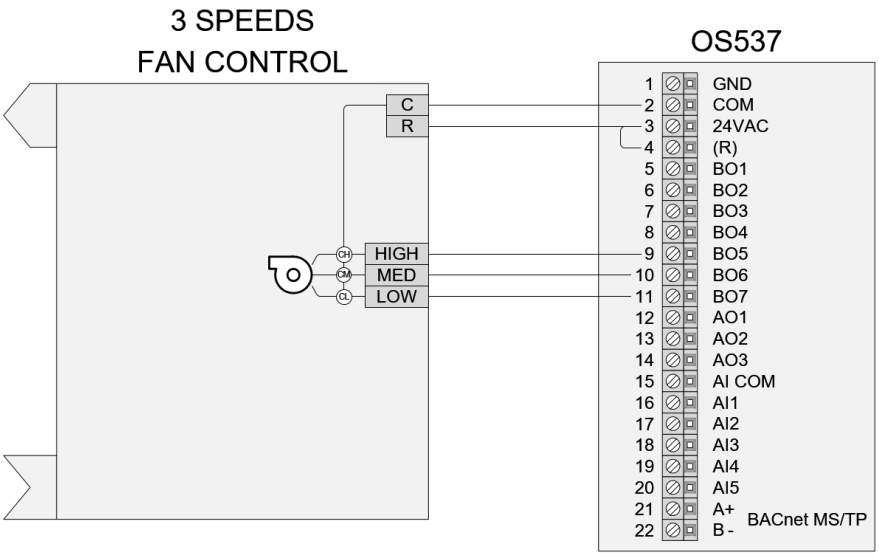

Add a 24VAC transformer when the equipment does not supply the power.

Fan Coil Unit (FCU) – Wiring

Fan Control – 2 Speed Fans MSV-58 = L-H

Fan sequence of operation

Occupied Mode:

With the fan mode set to **Low**, the fan will drive to Low speed.

With the fan mode set to **High**, the fan will drive to High speed.

In the controller deadband between heating and cooling setpoints, Auto demand (Keepfan BV-66) = FanLow allows the fan to stay at Low fan speed, and (Keepfan BV-66) = FanOff will shut down the fan completely.

Unoccupied Mode:

The fan will always operate in Auto mode during Unoccupied periods

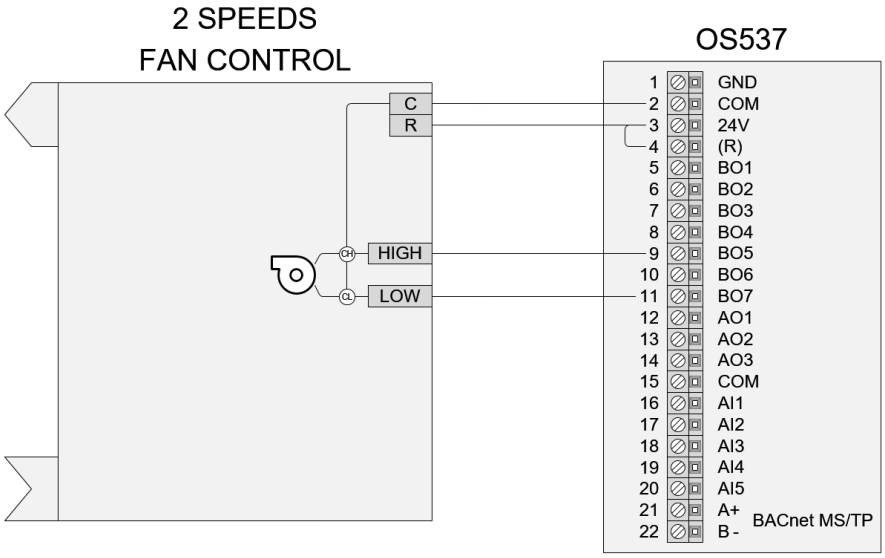

Add a 24VAC transformer when the equipment does not supply the power.

Fan Coil Unit (FCU) – Wiring

Fan Control – Single Speed Fans MSV-58 = On-Auto

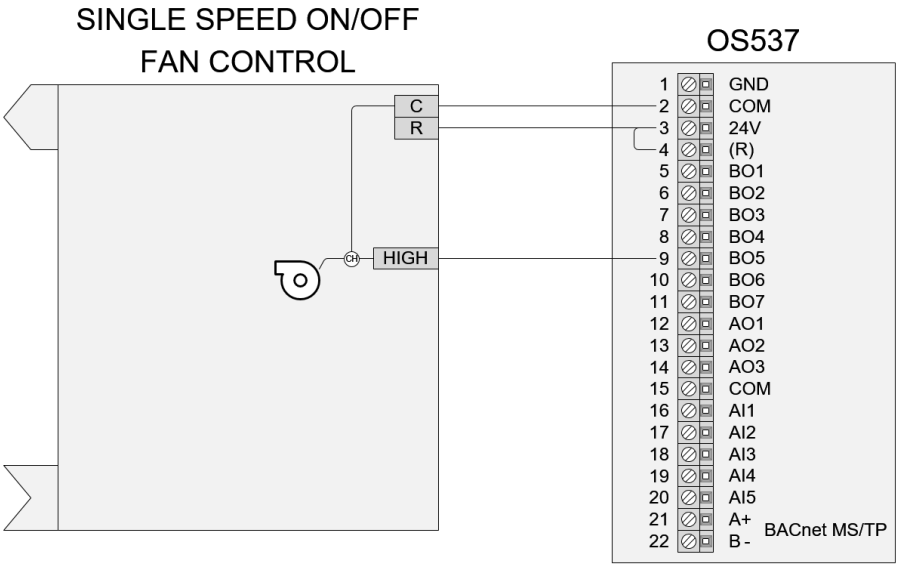

Add a 24VAC transformer when the equipment does not supply the power.

Fan sequence of operation

Occupied Mode:

Fan = **Auto** mode will energize the fan when the main PI cooling and heating demands are above 1% demand.

With the fan mode set to **ON**, the fan will always energize during Occupied periods.

In the controller deadband between heating and cooling setpoints, Autodemand (Keepfan BV-66) = FanLow allows the fan to stay ON, and (Keepfan BV-66) = FanOff will shut down the fan completely.

Unoccupied Mode:

The fan will always operate in Auto mode during Unoccupied periods

Fan Coil Unit (FCU) – Wiring

Optional inputs

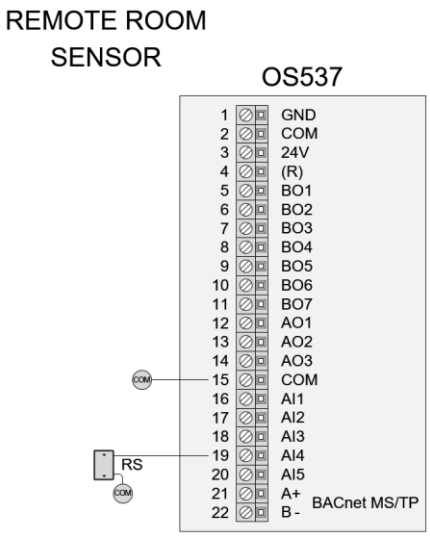

Optionally connect a 10K type 3 remote thermistor room sensor. MSV-2 default setting is “AutoDet”; so, detecting the remote sensor will replace internal thermostat temperature sensor. Changing MSV-2 to “Intern” will keep internal temperature sensor for control; this provides a way to read remote temperature from AI-4 for monitoring purpose.

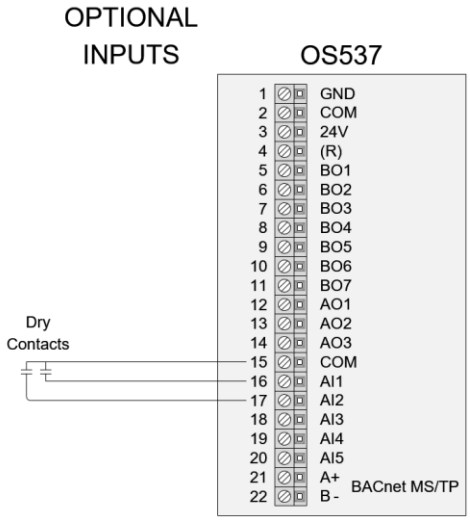

Optionally use MSV-46 and MSV-47 to configure AI-1 and AI-2 functions.

Fan Coil Unit (FCU) – Wiring

FCU Control Curves

Fan Speed Control

Speed Auto Occupied

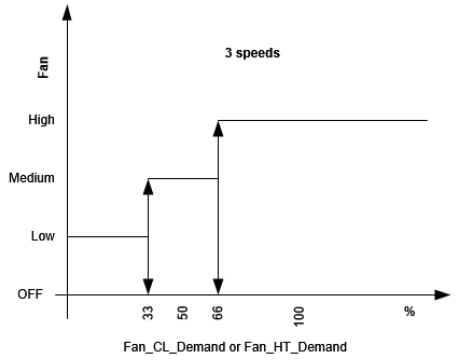

Speed Auto Unoccupied

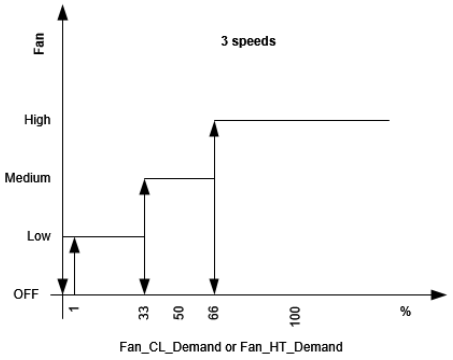

3 Speeds

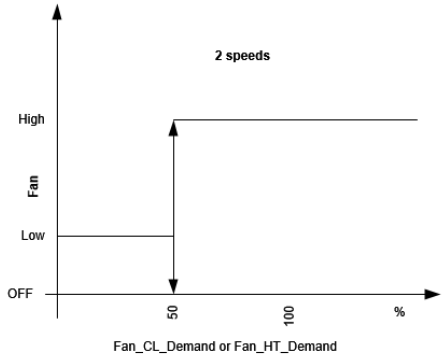

2 Speeds

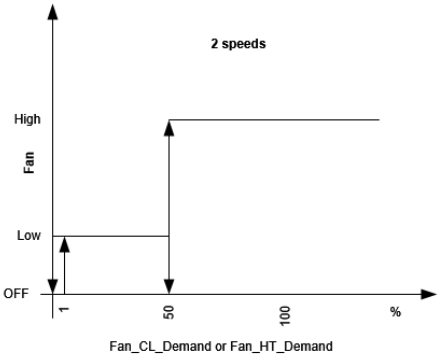

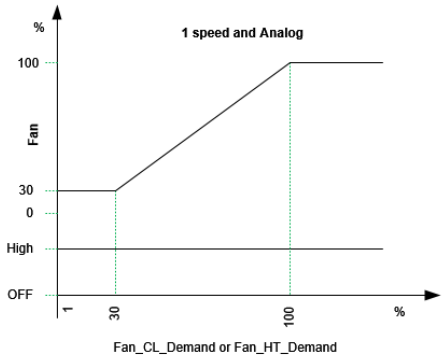

Analog Speed

Note: For all curves, it is required:

- ✓ CLG_Dem > 25%
  or
- ✓ HTG_Dem > 25%

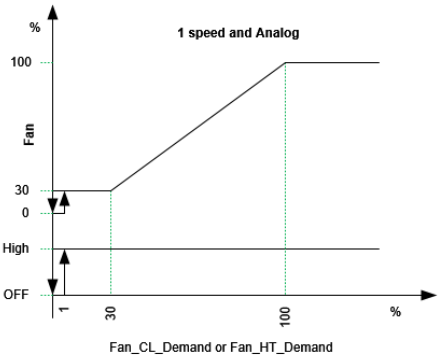

Fan Coil Unit (FCU) – Wiring

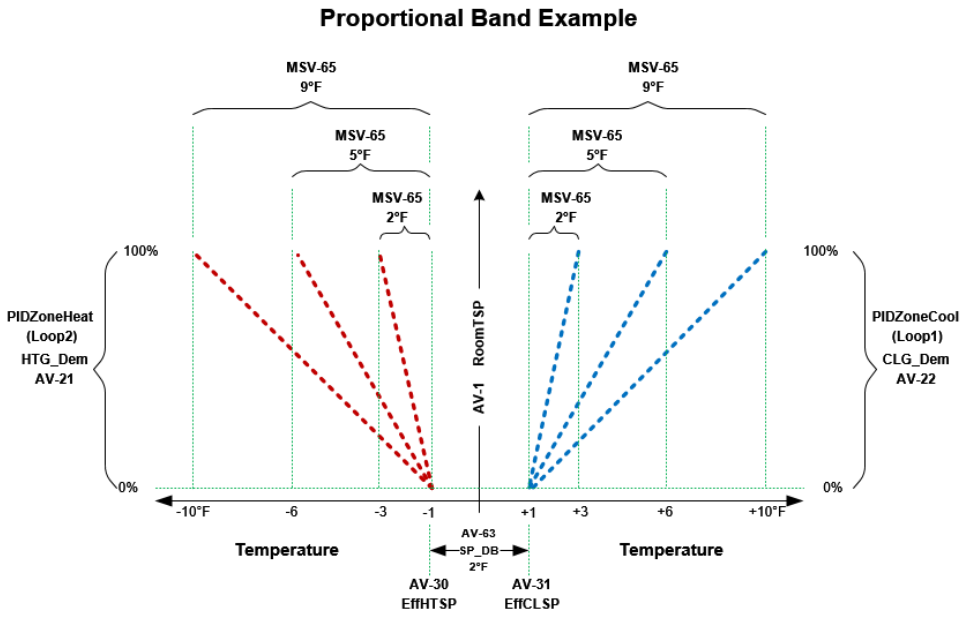

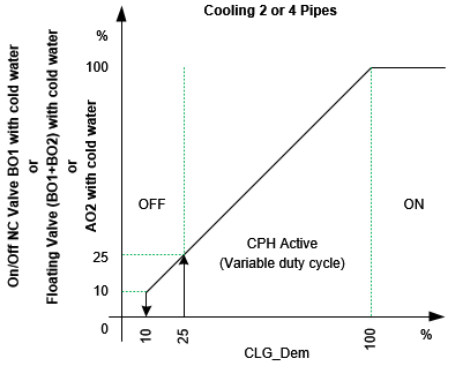

Note: CLG_Dem must be > 25% for at least 180 seconds

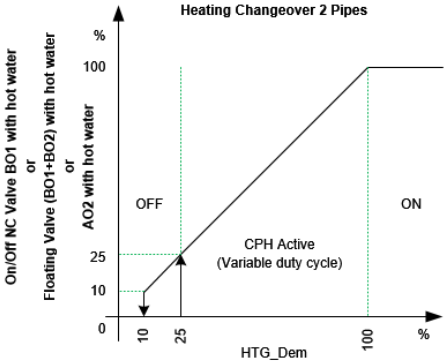

Note: HTG_Dem must be > 25% for at least 180 seconds

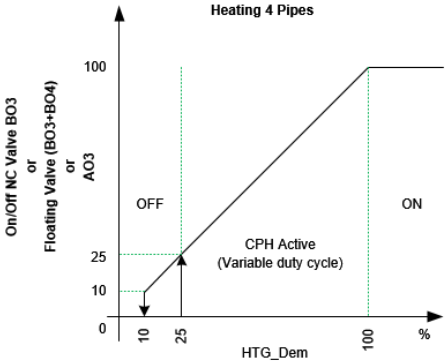

Note: HTG_Dem must be > 25% for at least 180 seconds

Fan Coil Unit (FCU) – Wiring

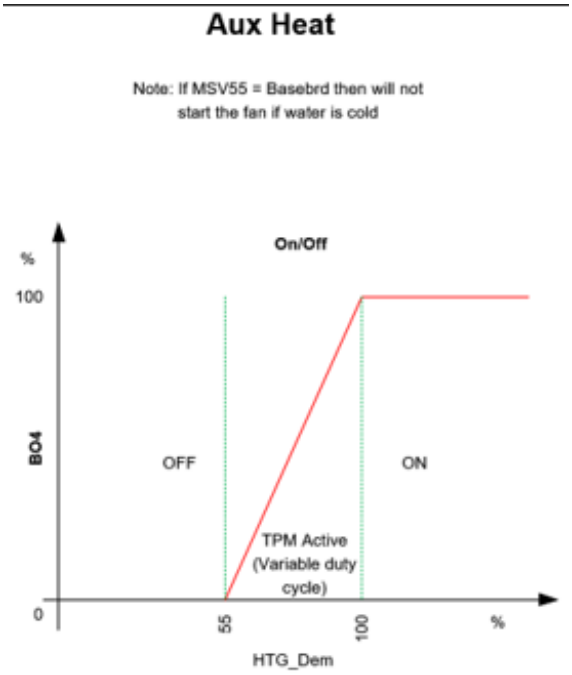

Fan Coil Unit (FCU) – Setup

SETUP

Setup Menu

9. Access the Setup Menu by holding the two left buttons.

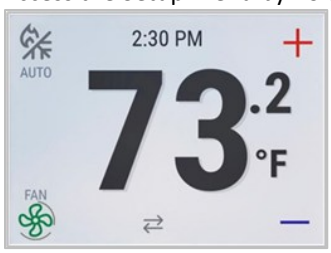

10. Press these PIN keys in sequence: The top left button twice and the top right button once

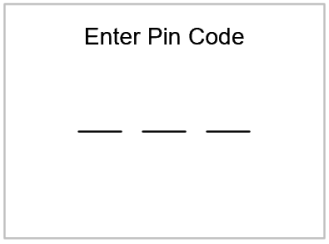

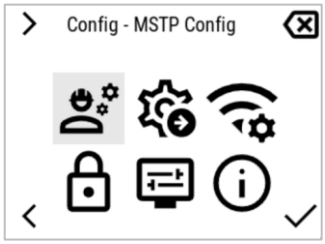

	MSTP Communication Configuration
	Quick RTU Application Setup
	WIFI Configuration
	Buttons Lock Configuration
	Display Configuration
	Display Additional Information About the OpenStat
< >	Scroll Menu Choices
✓	Select
	Exit Menus

Fan Coil Unit (FCU) – Setup

1. Config - MSTP Config

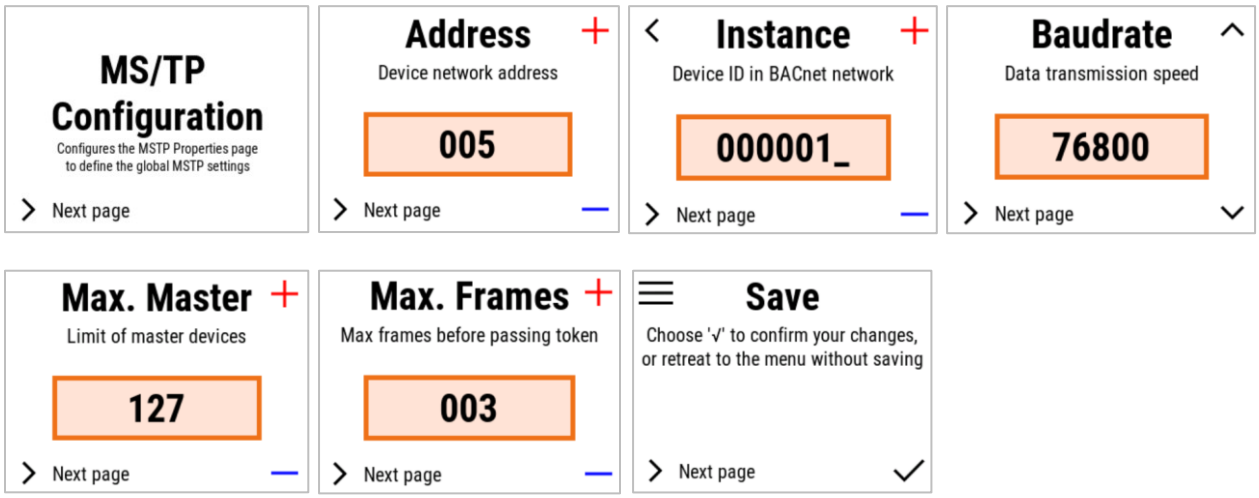

2. Config – Quick Setup

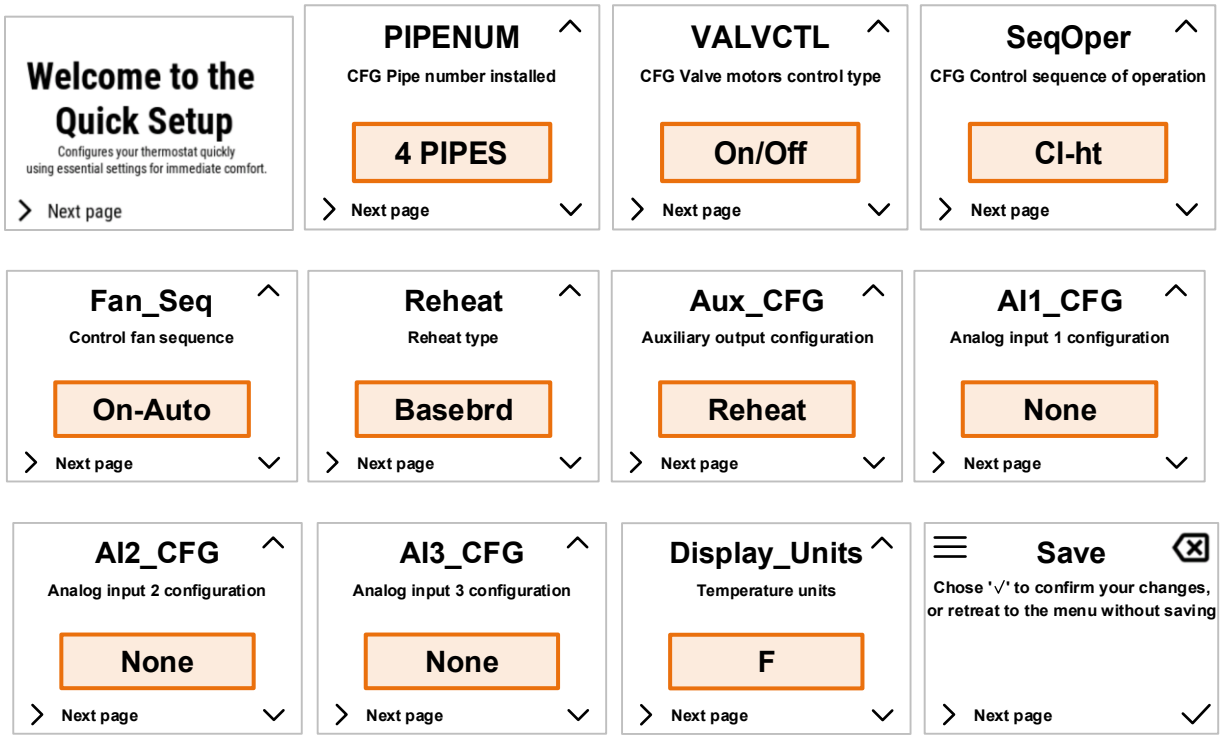

Fan Coil Unit (FCU) – Setup

3. Config – WIFI Settings (Refer to separate document “OpenStat Series - WIFI User Guide” for more info)

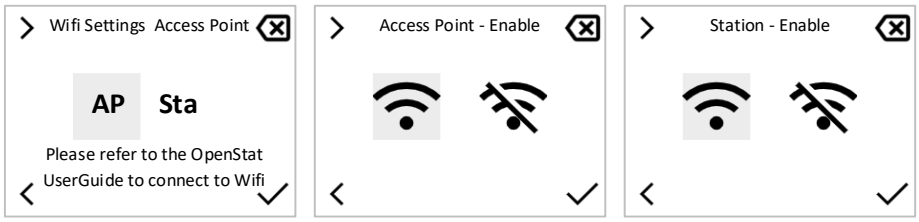

4. Config - Lock Type

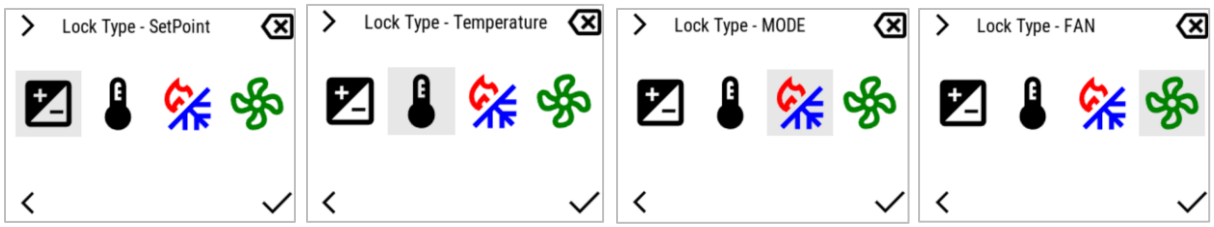

5. Config Display

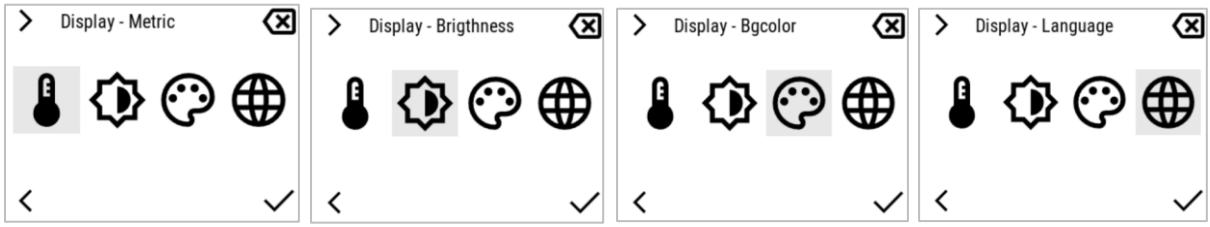

6. Config – About

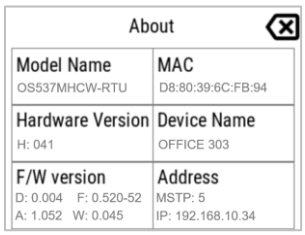

Fan Coil Unit (FCU) – BACnet Objects

BACnet Objects

Overview

GREEN = Important | No Color = Optional depending on equipment

Recommended: MSVs and AV(s) write at default priority (16), everything else priority 8 to 3

Quick Setup: Sequence, units, and service inputs

- **BV-50** Auto mode authorization
- **BV-51** Temperature units
- **BV-75** Valve motor control type
- **MSV-15** Control sequence operation
- **MSV-46** AI-1 configuration
- **MSV-47** AI-2 configuration
- **MSV-48** AI-3 configuration
- **MSV-52** System pipe number

Fan: Output location and control type

- **MSV-17** Fan mode
- **MSV-58** Fan control sequence
- **BV-66** Fan speed with no demand
- **AV-26** ECM minimum speed %

Heating: Stage configuration

- **MSV-55** Reheat type
- **MSV-75** Heating valve travel time
- **MSV-78** Output cycles per hour heating
- **BV-64** Reheat control type
- **BV-79** Modulating heat action

Cooling: Stage configuration

- **MSV-76** Cooling valve travel time
- **MSV-77** Output cycles per hour cooling
- **MSV-78** Modulating cool action

Auxiliary Output:

- **MSV-54** Auxiliary output configuration

PID Loops:

- **Loop-1** Cooling PID
- **Loop-2** Heating PID

T Set points: Sensor locations and set points

- **MSV-2** Temperature input location
- **MSV-65** Heating/cooling proportional band
- **MSV-70** Room temperature setpoint type (Sets AV-1 as heat, cool, or central set point)
- **AV-1** Room temperature set point
- **AV-41** Standby heating set point
- **AV-42** Standby cooling set point
- **AV-43** Unoccupied heating set point
- **AV-44** Unoccupied cooling set point
- **AV-58** Maximum heating set point
- **AV-59** Maximum cooling set point
- **AV-63** Room temperature set point deadband

Occupancy: Motion Sensor location and timers

- **MSV-44** Select PIR Motion sensor input
- **AV-27** Motion Set occupancy override time
- **AV-28** Set occupancy override time (OpenStat Button)
- **SCH-1** Occupancy schedule

General Operation and Monitoring: Occupancy, status, and set points

- **MSV-16** System mode (heat, cool, auto, off)
- **MSV-17** Fan mode (auto, low, med, high)
- **MSV-18** Occupancy command
- **MSV-33** Effective occupancy (status)
- **MSV-100** Help message (alarm status)
- **AV-1** Room temperature set point
- **AV-7** Effective room temperature
- **AV-21** Heating demand
- **AV-22** Cooling demand

Input and Outputs: Status for inputs and overrides outputs

- **AI-1 thru AI-7** Analog/binary inputs, CO2, and humidity (read-only)
- **AO-1 thru AO-4** Analog outputs
- **BO-1 thru BO-7** Binary outputs

Fan Coil Unit (FCU)

Physical Inputs and Outputs

OBJECT INSTANCE	FCU OBJECT NAME	DESCRIPTION	DEFAULT VALUE	TAGS	RANGE
BO-1	BO_1	Binary output 1	Off	Status	Dependent on MSV-52 and BV-75
BO-2	BO_2	Binary output 2	On	Status	Dependent on MSV-52 and BV-75
BO-3	BO_3	Binary output 3	Off	Status	Dependent on MSV-52 and BV-75
BO-4	BO_4	Binary output 4	On	Status	Dependent on MSV-52 and BV-75
BO-5	BO_High	High-speed fan output	Off	Status	Dependent on MSV-58
BO-6	BO_Med	Medium-speed fan output	Off	Status	Dependent on MSV-58
BO-7	BO_Low	Low-speed fan output	Off	Status	Dependent on MSV-58
AO-1	AO_ECM	Fan ECM output	0%	Status	Dependent on MSV-58
AO-2	AO_2	Analog output 2	0%	Status	Cooling or Heating 0-100%
AO-3	AO_3	Analog output 3	0%	Status	Heating 0-100%
AI-1	AI_1	Analog input 1		Status	Dependent on MSV-46
AI-2	AI_2	Analog input 2		Status	Dependent on MSV-47
AI-3	AI_3	Analog input 3		Status	Dependent on MSV-48
AI-4	AI_4	Remote room sensor		Status	32-122°F (0-50°C)
AI-5	AI_5	Unused		Status	
AI-6	RoomT	Room temperature		Status	32-122°F (0-50°C)
AI-7	RoomRH	Room humidity		Status	5-90%
AI-8 *	RoomCO2	Room CO2		Status	0-2000 PPM
BI-1	Motion	Motion detection	Off	Status	Off / Active

*Objects tagged as **Status** represent objects or properties typically meant to be displayed on graphics for various required visualizations.*

** RoomCO2 only available on "C" models like "OS537MHC"*

Analog Values (AV)

OBJECT INSTANCE	FCU OBJECT NAME	DESCRIPTION	TAGS	DEFAULT VALUE	RANGE
AV-1	RoomTSP	Room Temperature setpoint	User	72°F (22°C)	54-90°F (12-32°C)
AV-7	Eff_T	Effective temperature used for control	Status	---	-40-122°F (-40-50°C)
AV-9	OATemp	Outdoor air temperature	Status	---	-40-122°F (-40-50°C)
AV-12	SATemp	Supply air temperature	Status	---	-40-122°F (-40-50°C)
AV-13	CHOV_T	Changeover temperature	Status	---	-40-122°F (-40-50°C)
AV-21	HTG_Dem	Heating demand	Status	---	0-100%
AV-22	CLG_Dem	Cooling demand	Status	---	0-100%
AV-23	Fan_HT__Demand	Fan heating demand	Status	---	0-100%
AV-24	Fan_CL__Demand	Fan cooling demand	Status	---	0-100%
AV-25	ECM_Min	ECM minimum speed output	Cfg	30%	0-100%
AV-27	OvrTime_Set	Set occupancy override time	Cfg	60 min	15 – 480 min
AV-28	MotionOvrTime_Set	Motion Set occupancy override time	Cfg	10 min	1 – 60 min
AV-30	EffHTSP	Effective heating setpoint	Status	71°F (21°C)	---
AV-31	EffCLSP	Effective cooling setpoint	Status	73°F (23°C)	---
AV-39	OccHTSP	Occupied heating setpoint	User	71°F (21°C)	---
AV-40	OccCLSP	Occupied cooling setpoint	User	73°F (23°C)	---
AV-41	STBHTSP	Standby heating setpoint	Cfg	69°F (20.5°C)	---
AV-42	STBCLSP	Standby cooling setpoint	Cfg	78°F (25.5°C)	---
AV-43	Unoc_HT_SP	Unoccupied heating setpoint	Cfg	62°F (16.5°C)	---
AV-44	Unoc_CL_SP	Unoccupied cooling setpoint	Cfg	80°F (26.5°C)	---
AV-50	RT_Cal	Room temperature calib	Cfg	0	-5 to 5
AV-58	MaxHTSP	Maximum heating setpoint	Cfg	90°F (32°C)	40-90°F (4.5-32°C)
AV-59	MinCLSP	Minimum cooling setpoint	Cfg	54°F (12°C)	54-100°F (12-37.5°C)
AV-63	SP_DB	Setpoint deadband	Cfg	2	2 to 5

Please note that objects tagged as:

- **Cfg:** represents configuration properties of the device that are typically only set once during commissioning and start-up.
- **Status:** represents objects or properties typically meant to be displayed on graphics for various required visualizations.

Binary Values (BV)

OBJECT INSTANCE	FCU OBJECT NAME	DESCRIPTION	TAGS	DEFAULT VALUE	INACTIVE / ACTIVE TEXT
BV-2	OVRSTAT	Occupancy override status	Status	Normal	Normal / Overrid
BV-3	Mot_Det	Motion detection	Status	None	None / Moving
BV-5	OccSch	System occupancy schedule	Status	On	Off / On
BV-14	Aux_Cmd	Auxiliary network command	Cmd	Off	Off / On
BV-15	FanStat	Fan status	Status	---	Stopped / Running
BV-25	AuxStat	Auxiliary output status	Status	Off	Off / On
BV-29	AI1Stat	Analog input 1 binary contact status	Status	Deactivated	Deactivated / Activated
BV-30	AI2Stat	Analog input 2 binary contact status	Status	Deactivated	Deactivated / Activated
BV-31	AI3Stat	Analog input 3 binary contact status	Status	Deactivated	Deactivated / Activated
BV-35	Window	Window detection status	Status	Close	Close / Open
BV-36	Filter	Filter sensor status	Status	Normal	Normal / Alarm
BV-37	ServALM	Service alarm status	Status	Normal	Normal / Alarm
BV-38	Door	Door detection status	Status	Close	Close / Open
BV-40	Ch_Over	Change over status	Status	Cool	Cool / Heat
BV-50	AutoMod	Auto mode authorized	Cfg	Yes	No / Yes
BV-64	Reh_Opt	Reheat control option	Cfg	On-Off	Pulse1S / On-Off
BV-66	KeepFan	Fan auto mode	Cfg	Fan Low	Fan Low / Fan Off
BV-75	VALVCTL	Valve motor control type	Cfg	On/Off	On-Off / Floating
BV-78	AO2_Dir	AO2 action	Cfg	Direct	Direct / Reverse
BV-79	AO3_Dir	AO3 action	Cfg	Direct	Direct / Reverse
BV-200	LockStPoint	Lock Setpoint	Cfg	Unlock	Unlock / Lock
BV-201	LockMode	Lock Mode	Cfg	Unlock	Unlock / Lock
BV-202	LockFan	Lock Fan	Cfg	Unlock	Unlock / Lock
BV-203	WifiStatus	Wifi Status	Status	---	Off / On

Please note that objects tagged as:

- **Cfg:** represents configuration properties of the device that are typically only set once during commissioning and start-up.
- **Status:** represents objects or properties typically meant to be displayed on graphics for various required visualizations.

Multi-State Values (MSV)

OBJECT INSTANCE	FCU OBJECT NAME	DESCRIPTION	TAGS	DEFAULT VALUE	STATE TEXTS
MSV-2	Tsource	Temperature input location	Cfg	AutoDet	AutoDet Intern AI-4
MSV-5	Eff_Occ	Effective occupancy mode	Status	Occupied	Occupied Unoccup TempOcc Standby
MSV-6	Occ_Cmd	Occupancy command	Cmd	Loc_Occ	Loc_Occ Occupied Unoccup
MSV-15	SeqOper	Control sequence of operation	Cfg	Cl-Ht	Cooling Heating Cool-Rt Heat-Rt Cl-Ht Cl-Ht-R
MSV-16	MODE	System mode	User	Auto	Off Auto Cool Heat
MSV-17	FAN	Fan mode	User	Auto	Lo Med Hi Auto
MSV-19	KeyLock	Keypad lock level	Cfg	None	None Fan Mode FanMode All
MSV-26	BO3_BO4	BO3/BO4 status	Status		Stopped Open Close
MSV-27	BO1_BO2	BO1/BO2 status	Status		Stopped Open Close
MSV-28	FanStat	Fan status	Status		Off Low Med High

OBJECT INSTANCE	FCU OBJECT NAME	DESCRIPTION	TAGS	DEFAULT VALUE	STATE TEXTS
MSV-44	Bi_PIR	Select PIR Motion sensor input	Cfg	None	None NO, AI1 (BI) NC, AI1 (BI) NO, AI2 (BI) NC, AI2 (BI) NO, AI3 (BI) NC, AI3 (BI) NO, AI4 (BI) NC, AI4 (BI) NO, AI5 (BI) NC, AI5 (BI) External Intern
MSV-45	BI_SCH_Input	Select schedule input	Cfg	None (On)	None (Off) None (On) Scheduler AI-1 AI-2 AI-3 AI-4 AI-5 External
MSV-47	AI2_CFG	CFG Analog input 2	Cfg	None	None Overrid (*remote override switch*) Filter Service
MSV-48	AI3_CFG	CFG Analog input 3	Cfg	None	None COC/NH (*Normally Heat ChangeOver Contact*) COC/NH (*Normally Cool ChangeOver Contact*) COS (*ChangeOver Sensor*) SS (*Supply sensor remote monitoring 10K type 3 sensor*)
MSV-49	DoorCfg	Door sensor configuration	Cfg	None	None AI-1 AI-2 AI-3 AI-4 AI-5
MSV-51	WindowCfg	Window sensor Configuration	Cfg	None	None AI-1 AI-2 AI-3 AI-4 AI-5
MSV-50	AI5_CFG	CFG Analog Input 5	Cfg	None	None Fan Lock
MSV-52	PipeNum	Pipe number	Cfg	4 Pipes	2 Pipes 4 Pipes
MSV-54	Aux_CFG	Auxiliary output configuration	Cfg	Reheat	Reheat Occ-NO Occ-NC Fan-NO Fan-NC Network (*Can be controlled by BACnet*)

OBJECT INSTANCE	FCU OBJECT NAME	DESCRIPTION	TAGS	DEFAULT VALUE	STATE TEXTS
MSV-55	Reheat	Reheat type	Cfg	Basebrd	Basebrd Coil
MSV-58	Fan_Seq	Control fan sequence	Cfg	On-Auto	L-M-H L-H L-M-H-A L-H-A On-Auto (*Single speed or 0-10Vdc*)
MSV-65	PB	Heating/Cooling proportional band	Cfg	5 F 2.2 C	3 F (1.2 C) - 10 F (5.6 C)
MSV-70	SP_AUTO	Zone Temperature setpoint in auto mode	Cfg	Center	Heating Center Cooling
MSV-75	BO3Time	BO3/BO4 travel time for 3 states valve	Cfg	1.5 minutes	0.5 min - 6 min
MSV-76	BO1Time	BO1/BO2 travel time for 3 states valve	Cfg	1.5 minutes	0.5 min - 6 min
MSV-77	CL_CPH	Cooling output cycle per hour	Cfg	4 CPH	3 - 8 CPH
MSV-78	HT_CPH	Heating output cycle per hour	Cfg	4 CPH	3 - 8 CPH
MSV-100	HELP_mess	Help message	Status	Normal	Normal Service Filter Window
MSV-200	Brightness	Brightness Control	Cfg	Med	Low Med-Low Med
MSV-201	BgColor	Background Color	Cfg	White	White Orange Blue Green Red
MSV-202	MainDisplay	Main Display	Cfg	Temp	Temp Setpoint Nothing

OBJECT INSTANCE	FCU OBJECT NAME	DESCRIPTION	TAGS	DEFAULT VALUE	STATE TEXTS
MSV-203	Language	Language selection	Cfg	English	English French
MSV-204	Display_Units	Temperature displayed units	Cfg	F	C F

Please note that objects tagged as:

- **Cfg:** represents configuration properties of the device that are typically only set once during commissioning and start-up.
- **Status:** represent objects or properties typically meant to be displayed on graphics for various required visualizations.

Loop(s)

OBJECT INSTANCE	FCU OBJECT NAME	DESCRIPTION	TAGS	DEFAULT VALUE	RANGE
LOOP-1	PIDZoneCool	PID Zone cooling	Status		0-100%
LOOP-2	PIDZoneHeat	PID Zone heating	Status		0-100%

Default values:

Loop-1 : Kp = 20, Ki = 0.05, Bias = 0%

Loop-2 : Kp = 20, Ki = 0.05, Bias = 0%

Schedule

OBJECT INSTANCE	FCU OBJECT NAME	DESCRIPTION	TAGS	DEFAULT VALUE	RANGE
SCH-1	OccSchedule	Occupancy schedule	Cfg	Inactive	Inactive / Active

Network

MS/TP Wiring

RS-485 Network Guidelines OS537 Controllers

The best way to ensure a robust and reliable RS-485 network is to build it around a daisy-chain configuration.

Connecting a multidrop 485 network.

The EIA RS-485 Specification labels the data wires "A" and "B", but many manufacturers label their wires "+" and "-". In our experience, the "+" wire should be connected to the "A" line, and the "-" wire should be connected to the "B" line. Reversing the polarity will not damage a 485 device but will not communicate. That being said, the rest is easy: always connect "+" to "+", and "-" to "-".

Do not forget the Signal Ground. *While a differential signal does not require a signal ground to communicate, the ground wire serves an important purpose. Over hundreds of thousands of feet, there can be significant differences in the voltage level of "ground". The function of the signal ground wire is to tie the signal ground of each node to one common ground. If the ground voltage rises above 3 VAC, data will be lost, and the port itself will often be damaged. However, if the differences in signal grounds are too great, further attention is necessary.*

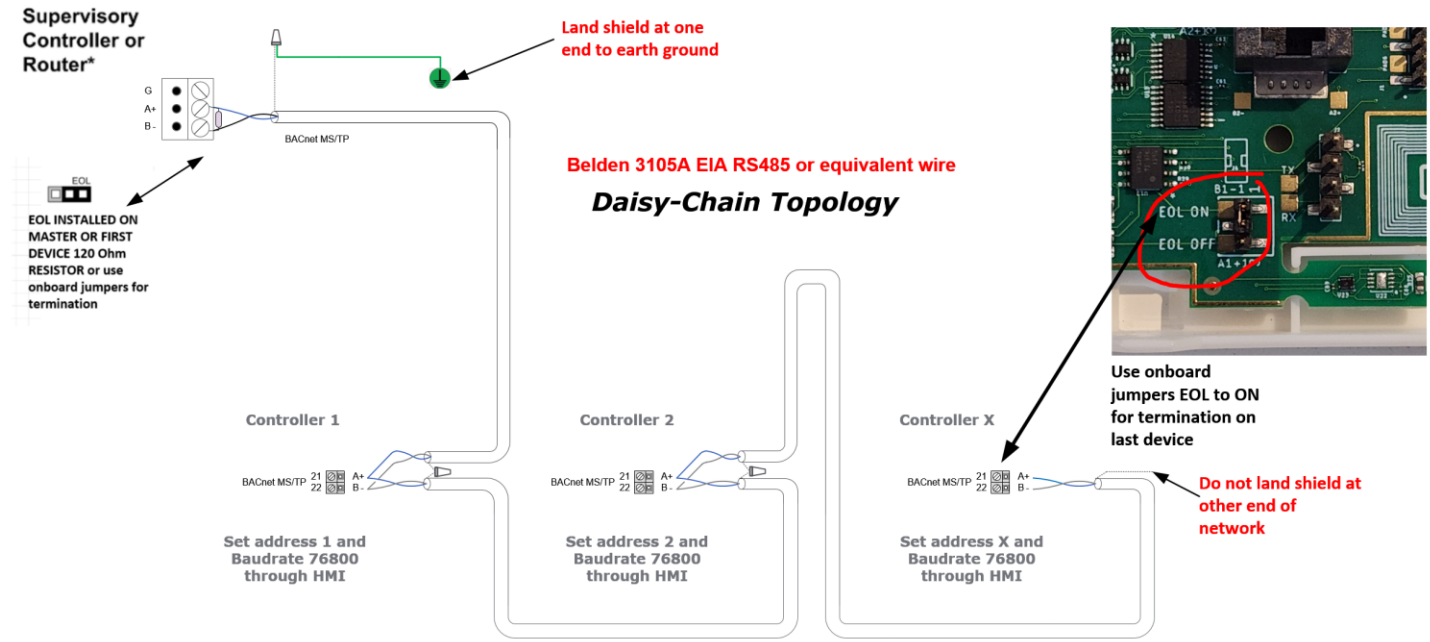

Testing Wiring

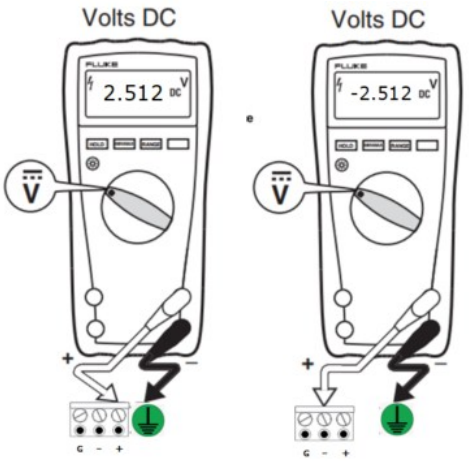

On a connected RS-485 network, measure with your **RMS** multi-meter from either "+" or "-" to earth ground. You should read about 2.5VDC. If you read higher than 2.75VDC, you are encountering noise and either you do not have a shielded twisted pair cable, you have a grounded shield on both sides, or the integrity of your cable is compromised. If you are reading lower than 2.1VDC, then a device on your network or front end is either limiting the biasing circuit or causing an issue such as no termination on both ends of the network, etc.

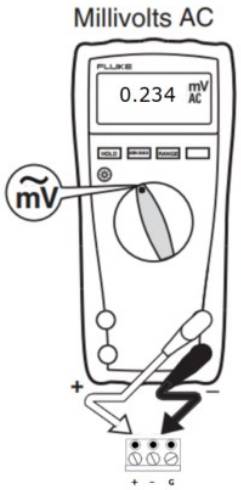

Measure with your multi-meter from "+" to "-" while the RS-485 network is connected. You should read between 200mVAC to 600mVAC average. If you read higher than 700mVAC average, a device may be compromising your network, or you may not have your shield landed in one location of your controller grounded

NON-FUNCTIONING TOPOLOGIES

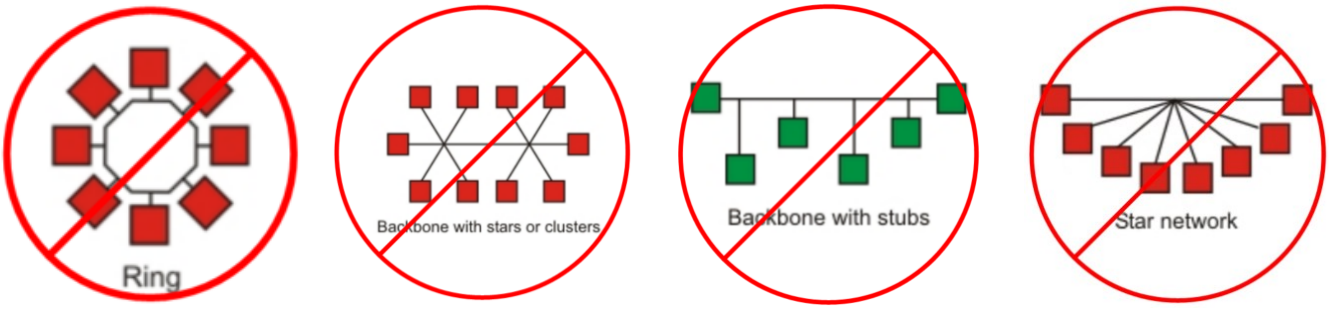

OS537

Configurable Wall BACnet MS/TP & Wi-Fi Controller

Strato Automation

Description

- Configurable Wall Controller
- ASHRAE G36 Compliant Applications
- AHU, FCU, RTU, HP, WSHP
- 15 I/O: 5 UI, 3 AO, 7 BO
- Sensors: Temp, RH% - *Standard*
- Motion and CO2: *Optional*
- WiFi6: WPA3/2.4 GHz **W MODELS**
- BACnet MS/TP: ***B-BC BTL Certification (Pending)***
- BACnet WiFi6 IP w/ WEB services: ***B-BC BTL Certification (Pending)***

OPEN STAT

MODEL	TEMP, RH%	MOTION	CO2 NDIR	BACNET WIFI6	MSTP
OS537H	X				X
OS537HW	X			X	X
OS537MHW	X	X		X	X
OS537MHCW	X	X	X	X	X

c UL us

Application: The OS537 controller streamlines the management of standard HVAC equipment such as FCU, RTU, HP, WSHP and AHU. The OS537 provides numerous configurations and flexibility to align with diverse project requirements

Technical Specifications

Power supply:
- 24 VAC/VDC ± 15%; Class 2

Current Consumption:
- 1.5 VA controller only
- 96 VA Max including BO's 2A each

Communication Protocols:
- BACnet MS/TP half-wave device
- Baud 9600, 19200, 38400, 76800 Bps (76800 default) RS485 transceiver is a ¼ load device
- Mini USB2 MS/TP network access
- Optional WiFi6 2.4Ghz BACnet IP module with integrated WEB services that fully support REST API's
- BTL listed: B-BC, BACnet Building Controller

Hardware
- Microprocessor: STM32 (ARM Cortex™ M33) 32 bits
- CPU Speed: 250 MHz
- Memory: 2 Mbytes non-volatile Flash
- RAM: 640 KB SRAM
- Real-time clock (RTC): Built-in capacitor (one-week backup)

Configuration
- Configurable using the local buttons, writing to the BACnet configuration objects or utilizing the embedded WEB page services or Strato Software tools.

Inputs:
5 Universal Inputs (AI/BI)
- Thermistor 10KΩ (type 2 or 3)
- Dry contact
- Voltage 0 - 10 Vdc (Input impedance of 100 K Ω)
- Resolution: 12 Bits (4096 segments)

Outputs:
7 Binary Outputs
- MOSFET Solid State Relays, Isolated
- 10 to 30VAC, 2.0A max

3 Analog Outputs
- Voltage 0 - 10 VDC linear

Humidity & Temperature Sensors
Sensirion™ SHT40
±1.8 RH @ 25-75% RH overall +/- 3%
±0.2 °C @ 0 °C to 60 °C

Radar Motion Detection Sensor:
- Operating Principle: Radar cross-section optimized for human being
- Detection Distance: 0.5 to 6M maximum
- Detection angle of ± 70 degrees

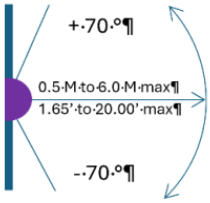

Optional CO2 Sensor: Telaire™ T6713
- Self-calibrating, non-dispersive infrared (NDIR)
- Sensor Range: 400-2000 PPM
- Accuracy: ± 30 PPM @ 3% of reading
- Accuracy is valid after a minimum of 2 weeks of continuous operation.
- Response Time of 3 minutes

Mechanical:
- Dimensions: W 3.58"(91 mm) x H 4.92"(125 mm) x D 0.98"(25 mm)
- Stocking temperature: -30 °C to 50 °C / -22 °F to 122 °F
- Operating conditions: 0 °C to 50 °C / 32°F to 122 °F 10% to 90% H.R. without condensation
- Mounting type: Standard 2" x 4" electrical junction box
- Enclosure: White color, PCABS material UL94VO

Warranty: 1 Year

Certifications:
- UL 916 Energy Management Equipment
- BTL listing (pending)
- FCC Class A digital device, pursuant to part 15 of the FCC Rules

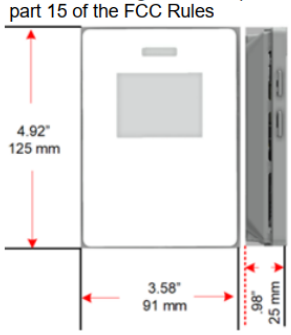

Designed and assembled in CANADA

End User Operation Guide (RTU)

Select System Mode

Select Fan Mode

Increase Temperature Setpoint

Decrease Temperature Setpoint

Normal display:

OFF	System Status: *OFF / No Cooling / Cooling / No Heating / Heating*
AUTO AUTO AUTO	System Status Auto Mode: *No demand / Heat demand / Cool demand*
FAN FAN FAN A FAN A	Fan Status: *OFF / ON / Auto OFF / Auto ON*
	Status: Unoccupied / Occupied **With Motion Model [Future]
	BACnet MSTP communication is connected
	Wi-Fi connected

Left Buttons Choices:

	Select System Mode: *OFF / Auto Heat-Cool / Cooling Only / Heating Only*
A	Select Fan Mode: *ON / Auto*

When Schedule is Unoccupied:

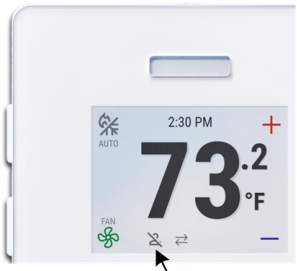

Indicate "Unoccupied" state.
Pressing any button will trigger a 60 minutes temporary override.
The icon will change to "Occupied" during this period.

End User Operation Guide (FCU)

Select System Mode

Select Fan Speed

Increase Temperature Setpoint

Decrease Temperature Setpoint

Normal display:

OFF	**System Status:** *OFF / No Cooling / Cooling / No Heating / Heating*
AUTO AUTO AUTO	**System Status Auto Mode:** *No demand / Heat demand / Cool demand*
FAN FAN FAN A FAN A	**Fan Status:** *OFF / ON / Auto OFF / Auto ON*
	Status: Unoccupied / Occupied
	BACnet MSTP communication is connected.
	Wi-Fi connected

Left Buttons Choices:

	Select System Mode: *OFF / Auto Heat-Cool / Cooling Only / Heating Only*
A	**Select Fan Speed:** *Low / Med / High / Auto*

When Schedule is Unoccupied:

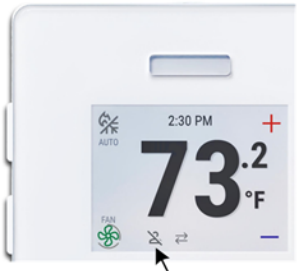

Indicate "Unoccupied" state.
Pressing any button will trigger a 60 minutes temporary override.
The icon will change to "Occupied" during this period.