显示器支架

MONITOR STAND

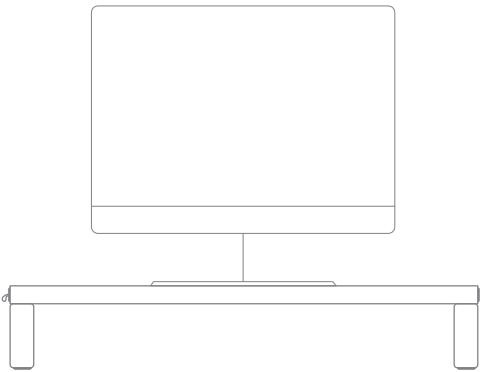

使用说明

Instructions

VER：V1.1

目　录
CATALOGUE

1、 前言 Introduction 3

2、 安全使用须知 Safety Instructions for Use 4

3、 产品概述 Product Overview 6

4、 包装清单 Packing list 6

5、 产品结构 Product Structure 7

6、 产品特性 Product Characteristics 9

7、 产品参数 Product Parameters 10

8、 使用条件 Service Conditions 12

9、 操作指南 Operating Instructions 12

10、维护和清洁 Maintenance and Cleaning 16

11、存储环境 Storage Environment 16

12、服务与保修 Service and Warranty 17

前言（Foreword）

您好！承蒙您惠购本公司 N1 系列显示器支架产品，谨致谢意！
Thank you for purchasing the N1 monitor stand.

文档详细介绍产品的安装、功能及其配置等内容，使用产品前请仔细阅读，阅读后请妥善保存文档以便日后查阅。

This file provides a detailed introduction to the installation, functionality, and configuration of the product. Please read it carefully before using the product and save it properly for future reference.

符号约定 Symbol Convention

在本文档中可能出现下列标识，代表的含义如下。

The following symbols may appear in this article, representing the following meanings.

标识	说明
危险	表示有高度潜在危险，如果不能避免，会导致人员伤亡或严重伤害。 This symbol indicates a high potential danger, which, if not avoided, can result in personal injury or serious injury.
警告	表示有中度或低度潜在危险，如果不能避免，可能导致人员轻微或中等伤害。 This symbol indicates a moderate or low degree of potential danger, which, if not avoided, may result in minor or moderate injury to personnel.
注意	表示有潜在风险，如果忽视这些文本，可能导致设备损坏、数据丢失、设备性能降低或不可预知的结果。 This symbol indicates a potential risk, and if these texts are ignored, it may lead to device damage, data loss, reduced device performance, or unpredictable results.
窍门	表示能帮助您解决某个问题或节省您的时间。 This symbol indicates that it can help you solve a problem or save you time.
说明	表示是正文的附加信息，是对正文的强调和补充。 This symbol represents additional information to the main text, emphasizing and supplementing it.

关于本文档 About this document

本文档供多个型号产品使用，产品外观和功能请以实物为准。
This document is intended for use with multiple models of products. Please refer to the actual product for its appearance and functionality.

1、如未按照本文档中的指导进行操作而造成的任何损失由使用方自行承担。
Any losses caused by not following the instructions in this document shall be borne by the user.

2、本文档会实时根据相关地区法律法规更新内容，具体请参见产品的纸质、电子光盘、二维码或官网，如果纸质与电子档内容不一致，请以电子档为准。
This document will be updated in real-time according to relevant regional laws and regulations. Please refer to the product's paper, electronic CD, QR code, or official website for details. If there is a discrepancy between the paper and electronic content, please refer to the electronic version.

3、本公司保留随时修改本文档中任何信息的权利，修改的内容将会在本文档的新版本中加入，恕不另行通知。
Our company reserves the right to modify any information in this document at any time, and the modified content will be added to the new version of this document without prior notice.

4、本文档可能包含技术上不准确的地方、或与产品功能及操作不相符的地方、或印刷错误，以公司最终解释为准。
This document may contain technical inaccuracies, inconsistencies with product functionality and operation, or printing errors, subject to the company's final interpretation.

5、如果获取到的PDF文档无法打开，请使用最新版本或最主流的阅读工具。
If the obtained PDF document cannot be opened, please use the latest version or the most mainstream reading tool.

安全使用须知（Safety briefing）

以下是关于产品正确使用的要求，为预防危险、防止财产受到损失，使用产品前请仔细阅读并在使用时严格遵守。

The following are the requirements for the correct use of the product. To prevent danger and property damage, please read carefully before using the product and strictly follow them during use.

1、操作要求 Operational Requirements

注意

• 在允许的湿度和温度条件下使用设备。

Please use the equipment under allowable humidity and temperature conditions.

2、储存要求 Storage requirements

注意

• 在允许的湿度和温度条件下储存设备

Please store the equipment under allowable humidity and temperature conditions.

3、操作要求 Operational Requirements

危险

• 未经专业指导，不得拆卸设备。

Do not disassemble equipment without professional guidance.

• 在额定功率输入和输出范围内操作设备。

Operate the device within the rated power input and output range.

• 在拆卸电线前，请确保设备已断电，以避免造成人身伤害。

Please ensure that the equipment is powered off to avoid personal injury before disassembling the wires.

注意

• 在允许的湿度和温度条件下使用该设备。

Please use the equipment under allowable humidity and temperature conditions.

• 不要将液体滴入或飞溅到设备上，并确保设备上没有充满液体的物体，以防止液体流入设备内。

Do not drip or splash liquid onto the device, and ensure that there are no

objects filled with liquid on the device to prevent liquid from flowing into the device.

4.维护要求 Maintenance requirements

危险

维护前关闭设备。Turn off the equipment before maintenance.

在维护电路图上的关键部件上进行标记，并带有警告标志。

Please mark the key components on the maintenance circuit diagram with warning signs.

产品概述 (Overview)

N1系列显示器支架，可以为用户提供更加舒适、健康、高效的使用体验，并且适用于市 面上大多数显示器和使用场景。

Thank you for purchasing the N1 monitor stand.

N1 monitor stand can provide users with a more comfortable, healthy, and efficient user experience, and is suitable for most displays and usage scenarios on the market.

N1系列显示器支架PRO版本是一款多功能支架产品，具有15W无线充电模块以及6合1扩展坞功能：USB-C input、USB3.0A*2、HDMI、PD、USB-C3.0上行等多项功能，具有高度的适用性和扩展性。

N1 PRO monitor stand is a multi-functional stand, which has the 15W wireless charge service and 6-in-1 hub functions: USB-C input, USB3.0A * 2, HDMI, PD, USB-C3.0 and other functions, with high applicability and scalability.

包装清单 (Packing list)

1、N1显示器支架 * 1 (N1 Monitor Stand * 1)

2、《使用指南》 手册 * 1 (User Guide * 1)

3、PRO版本配备专用数据线 * 1 (Pro's Data cable * 1)

请按照说明进行操作，并妥善保存手册以备将来参考

Please follow the instructions and keep the manual safe for future reference

产品结构 (Product Mix)

产品尺寸图：单位mm

Product Dimension: mm

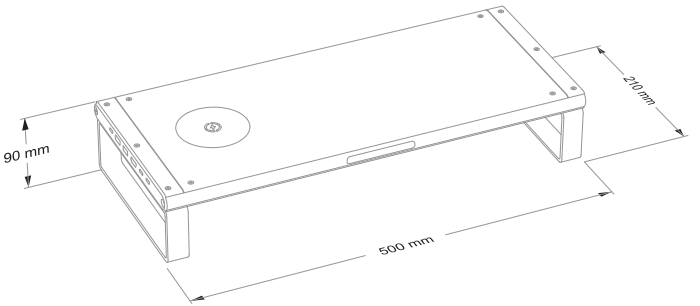

产品应用场景图 Product application scenarios

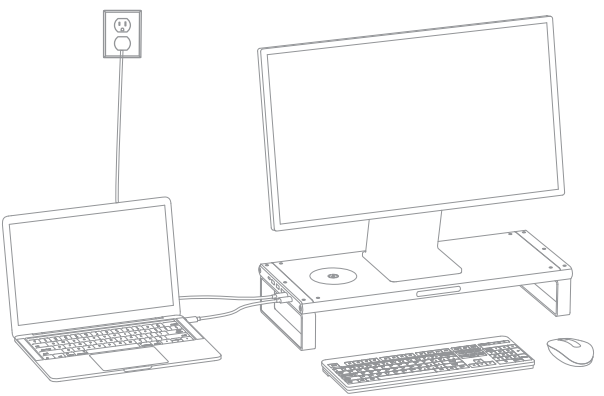

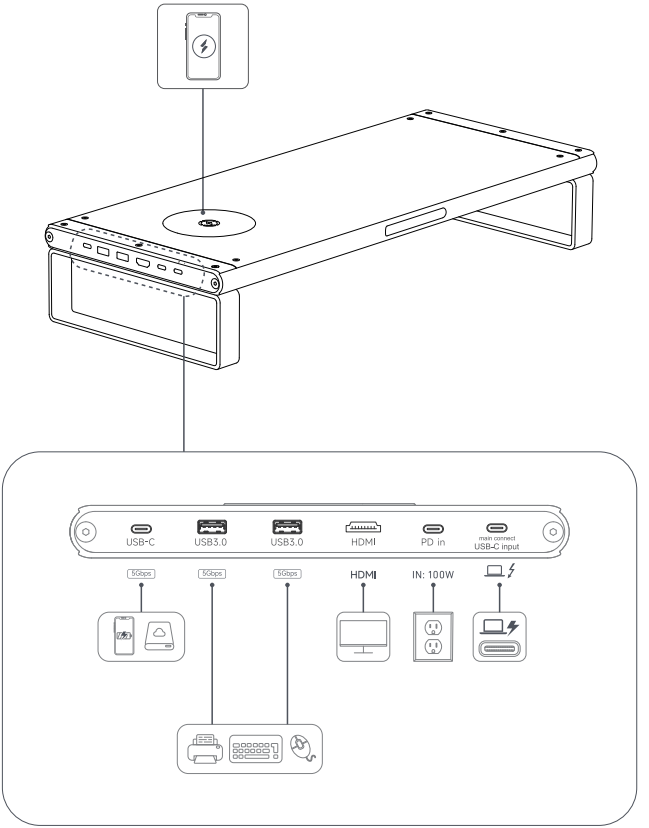
USB-C
USB3.0
USB3.0
HDMI
PD in
main connect
USB-C input
5Gbps
5Gbps
5Gbps
HDMI
IN: 100W

产品特性(Product Characteristics)

适用TYPE –C & USB接口设备
Applicable to TYPE-C&USB interface devices

2个USB A母接口、1个HDMI接口、 1个PD接口、1个USB-C3.0 数据接口、1个USB-C input 接口
2 USB A female ports, 1 HDMI port, 1 PD port, 1 USB-C 3.0 port, 1 USB-C input port

兼容USB 3.0/USB 2.0
Compatible with USB 3.0/USB 2.0

无线充兼容WPC Qi v1.2.4最新标准，支持A11、A11a、MP-A2线圈，支持5W、苹果7.5W、三星10W、15W充电。
Wireless charging is compatible with the latest WPC Qi v1.2.4 standard, supporting A11, A11a, MP-A2 coils, 5W, Apple 7.5W, Samsung 10W, and 15W charging.

支持带TYPE-C接口的Mac Book,平板电脑及带TYPC-C OTG安卓智能手机
Support for Mac Books with TYPE-C interface, tablets, and Android smartphones with TYPC-C OTG

支持Windows10/11 , Android, MAC 10.X or later version.
Support Windows10/11, Android, MAC 10. X or later version

1拖6，6口可以同时使用
1 drag 6, 6 ports can be used simultaneously

Plug & Play　即插即用，无需安装驱动
Plug&Play, no driver installation required

产品参数 (Product Parameters)

规 格 Specifications	描 述 Description
型 号 Model	N1系列 N1 Series
材 质 Materials	铝合金+硅胶+ABS Aluminum Alloy+Silicone+ABS
重 量 Weight	1970g ± 50g
尺 寸 Size	500*210*90mm
接口数量 Interfaces quantity	6口 6 pcs
接口类型 Interface type	USB3.0*2+USB-C*1+HDMI*1+PD3.0*1+USB-C input*1
上行接口 Uplink interface	TYPE –C Cable
USB3.0*3	Max:5Gbps
USB – C*2	Max:5Gbps
HDMI	Max:4K@60Hz
PD	PD3.0 Max: 75W, The HUB withholds 25W of power
USB-A power suppl	Max:5V/0.9A
USB-C power supply	Max:5V/0.9A
无线充电 Wireless charging	苹果iOS: 7.5W/5W 安卓Android: 15W/10W 输入Input: 9V/1.67A 输出Output: 5V/1A 9V-1.1A 9V/1.67A Max 无线充电动态功率说明 Wireless Charging Dynamic Power

	1、当Bus-powered 模式,以及外部PD充电器功率小于60W条件下，无线充电功率调整为5W When in Bus powered mode and when the power of the external PD charger is less than 60W, the wireless charging power is adjusted to 5W 2、当外部适配器功率为60-96W，充电功率调整为最大10W When the power of the external adapter is 60-96W, the charging power is adjusted to a maximum of 10W 3、当外部适配器功率为96W以上时，充电功率调整为最大15W When the external adapter power is above 96W, adjust the charging power to a maximum of 15W
操作系统兼容 Operating system compatibilit	MAC OS 9.1or higher Windows 10/11 Android 9.0or higher Linux 2.4or higher
HUB支持设备 HUB supports devices	2016 MacBook 12" / 13" / 15" / 2016 MacBook Pro 2017 MacBook / 2018 MacBook pro with Touch Bar Dell XPS12(9250) / Dell XPS13(9350)/DellXPS15(9550) Dell Precision5510 / HP Spectre X2 / HP Spectre X360 HP Elitebook Folio G1 / HP Elite X2 1012 G1 Acer Switch Alpha 1 / Acer Spin7 / Acer Chromebook R13 Google Chromebook Pixel / Lenovo 900 / Lenovo 910 Samsung s8 / Samsung S8 plus/HuaWei MateBook
无线充兼容型号 Wireless charging compatible models	iPhone : iPhone 12 / iPhoneSE / iPhone 11 / iPhone 11 Pro / iPhone 11 Pro Max / iPhone X / iPhone Xs / iPhone Xs Max / iPhone XR / iPhone 8 / iPhone 8 Plus Huawei : 华为Mate 40 / Mate 40 Pro / Mate 40 Pro+ / Mate 40 RS / 保时捷Mate 30 / Mate 30 Pro / Mate 30 Rs / P40 Pro / P30 Pro / Mate20 Pro / Mate20 RS / Mate Rs Samsung : Galaxy s10 / Galaxy S10+ / Galaxy s9 / Galaxy S9+ / Galaxy s8 / Galaxy S8+ / Galaxy S7 / Galaxy S7 edge / Galaxy S6 / Galaxy S6 edge Xiaomi : 10 / 10 Pro / 9 / 9 Pro / MIX3 / MIX2S HONOR: V30 Pro / 30 Pro+

无线充辐射磁场强度 Radiated H-Field	-14.93dBuv/A@10M
无线充频率范围 Frequency Range	111-205KHz
无线充数据通讯 Data Communication	137.9kHz

使用条件 (Conditions of Use)

项　目 Item	条　件 Condition
环境温度 Environmental Temperature	0-40°C
存放温度 Storage Temperature	5°C-45°C
相对湿度 Relative Humidity	非凝结状态下0% - 90% 0% -90% in non condensing state
工作湿度 Working Humidity	< 85% RH
工作电压 Working Voltage	4.75 VDC ~ 5.25 VDC

使用指南(User Guideline)

1. 检查配件完整性，取出包装盒中的支架主体及支撑架、安装工具和螺丝。
Check the integrity of the accessories and take the stand panel , support frame and installation tools as well as screws out from the box.

2 使用安装工具和螺丝，将支撑架按箭头方向安装好，如图所示：

The installation tools and screws should be used to install the holders in the direction of the arrow, as shown:

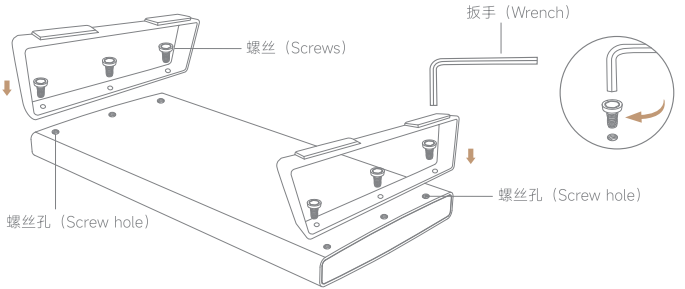

3. 将整个显示器支架 反过来平放，即可使用，如图所示：

Turn the entire monitor stand upside down and lay it flat to use, as shown:

4. 6合1扩展坞以及15W无线充使用说明

Instructions for 6-in-1 hub and 15W wireless charge

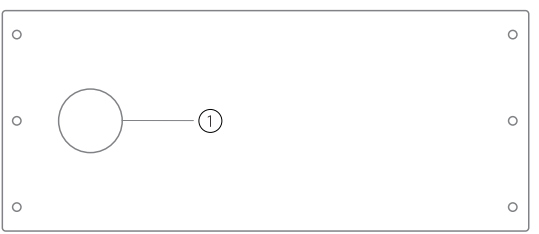

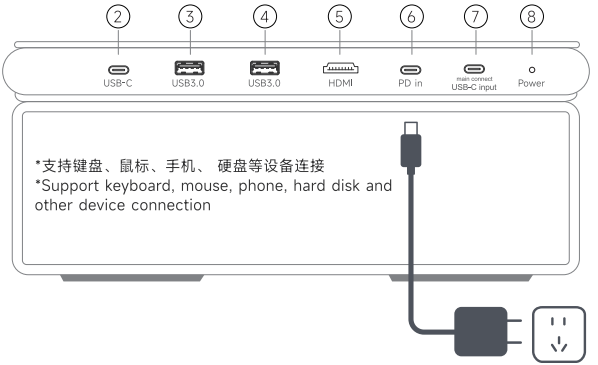

① **无线充电使用：**必须接入电源才可使用。
Wireless charging guideline: It must be connected to the power supply before it can be used.

② **USB-C 3.0：**
将扩展坞的USB-C接口连接设备的USB-C端口，确保插头与 端口相匹配。这个接口用于将扩展坞与您的设备连接起来，实现数据传输 和充电功能。
Plug the C uplink of the hub into the USB-C port of the device, making sure the plug matches the port. This interface is used to connect the hub with your device for data transfer and charging.

③④ **USB-A 3.0：**扩展坞配备两个USB 3.0接口，可以将USB设备（如鼠标、键 盘、闪存驱动器等）插入这些接口。这些接口提供高速数据传输功能，让您的设备与外部设备快速连接，以满足您的工作和娱乐需求。
USB 3.0 ports: The hub is equipped with two USB 3.0 ports that allow USB devices (such as mice, keyboards, flash drives, etc.) to be plugged into these ports. These interfaces provide high-speed data transfer capabilities, allowing your devices to quickly connect with external devices to meet your work and play needs.

⑤ **HDMI：**如果需要将设备连接到外部显示器或电视上，将HDMI接口插入扩展坞，另一头连接到显示器或电视的HDMI端口。
If you need to connect the device to an external monitor or TV, plug the HDMI connector into the hub and connect the other end to the HDMI port of the monitor or TV.

⑥ **PD 100W：**如果您的设备支持USB PD快速充电功能，可以使用扩展坞上 的PD接口进行充电。只需将支持PD的充电器插入扩展坞的PD接口，并将扩展坞连接到设备上，将为您的设备提供快速充电功能。
If your device supports USB PD fast charging, you can use the PD port on the hub to charge. Simply plug a PD-enabled charger into the PD connector of the hub and connect the hub to the device, which will provide fast charging for your device.

⑦ **TYPE-C input：**将扩展坞的input接口接入您设备的USB-C端口，这个 接口用于将扩展坞与您的设备连接起来，实现数据传输、充电和无线充电功能。
Plug the host uplink interface of the hub into the USB-C port of your device. This interface is used to connect the hub with your device to realize data transmission, charging and wireless charging functions.

⑧ **LED 指示灯和电源按钮：**通电时亮蓝色灯。
LED indicator light and power button: Blue light when powered on.

说明

扩展坞的 Type-C 公头连接到设备时，连接USB 3.0 端口的设备不会立即工作，会有几秒钟的延迟，属于正常现象。
When connecting the Type-C male of the docking station to the device, the device connected to the USB 3.0 port will not work immediately and there will be a delay of a few seconds, which is a normal phenomenon.
插拔PD电源时，连接的USB设备会短暂断开连接， 然后在几秒钟后重新连接，因此，为防止可能的数据丢失或损坏，请避免在传输数据时断开PD接口与电源的连接。
When plugging or unplugging a PD power supply, the connected USB device will briefly disconnect and then reconnect after a few seconds. Therefore, to prevent possible data loss or damage, please avoid disconnecting the PD interface from the power supply during data transmission.
读取大容量移动硬盘时，请连接PD充电。
When reading a large capacity mobile hard drive, please connect the PD to charge.
室温条件下，产品工作温度为45 °C左右，属于正常发热情况。
At room temperature, the working temperature of the product is around 45 °C, which is a normal heating condition.

维护和清洁(Maintenance and cleaning)

断开连接的电源，用干净湿布清洁笔记本电脑支架。通过这种方式，您将最有效地清除所有污垢。
Disconnect the power supply, clean the laptop stand with a clean, damp cloth. In this way, you will remove all dirt most efficiently.

存储环境(Storage environment)

将笔记本电脑支架存放在清洁干燥的地方。请勿将设备存放在极高或极低的温度下。
Store the laptop stand in a clean, dry place. Do not store the device at extremely high or low temperatures.

FCC声明(FCC Statement)

NOTE：This device complies with part 15 of the FCC Rules. Operation is subject to the following two conditions:
(1) This device may not cause harmful interference, and
(2) this device must accept any interference received, including interference that may cause undesired operation.
注：本设备符合FCC规则第15部分。操作受以下两个条件的约束：
（1）此设备可能不会造成有害干扰，
（2）此设备必须接受任何接收到的干扰，包括可能导致意外操作的干扰。

Any changes or modifications not expressly approved by the party responsible for compliance could void the user's authority to operate the equipment.
未经负责合规的一方明确批准的任何更改或修改都可能使用户操作设备的权限无效。

NOTE: This equipment has been tested and found to comply with the limits for a Class B digital device, pursuant to Part 15 of the FCC Rules. These limits are designed to provide reasonable protection against harmful interference in a residential installation. This equipment generates, uses and can radiate radio frequency energy and, if not installed and used in accordance with the instructions, may cause harmful interference to radio communications. However, there is no guarantee that interference will not occur in a particular installation.

注：根据FCC规则第15部分，该设备经过测试，符合B类数字设备的限制。这些限制旨在为住宅安装中的有害干扰提供合理的保护。该设备产生、使用并可以辐射射频能量，如果不按照说明安装和使用，可能会对无线电通信造成有害干扰。但是，不能保证在特定安装中不会发生干扰。

If this equipment does cause harmful interference to radio or television reception,which can be determined by turning the equipment off and on, the user is encouraged to try to correct the interference by one or more of the following measures:
如果该设备确实对无线电或电视接收造成有害干扰，鼓励用户尝试通过以下一种或多种措施来纠正干扰：

-- Reorient or relocate the receiving antenna.
-- Increase the separation between the equipment and receiver.
-- Connect the equipment into an outlet on a circuit different from that to which the receiver is connected.
-- Consult the dealer or an experienced radio/TV technician for help.
--重新定向或重新定位接收天线。
--增加设备和接收器之间的间距。
--将设备连接到不同电路上的插座与接收器所连接的设备不同。
--请咨询经销商或经验丰富的无线电/电视技术人员以获取帮助。

FCC Radiation Exposure Statement
This equipment complies with FCC radiation exposure limits set forth for an uncontrolled environment. This equipment should be installed and operated with a minimum distance of 20 cm between the radiator and your body.
FCC辐射暴露声明
该设备符合为不受控环境规定的FCC辐射暴露限值。安装和操作此设备时，散热器和身体之间的最小距离应为20厘米。

服务和保修(Service and warranty)

本公司对产品提供1年保修。

在保修期内获得服务，必须将产品连同购买证明一起寄回。

本保修不包括：

因误用或不正确的维修而造成的损坏；

客户在购买时意识到的缺陷；

第三方造成的损坏或缺陷。

offers a 1-year warranty on the product.

To receive service within the warranty period, the product must be sent back along with proof of purchase.

This warranty does not cover:

damage caused by misuse or incorrect repairs;

defects of which the customer became aware at the time of purchase;

Damage or defects caused by third parties.

填写信息（Information）					
产品名称 Product Name		购买日期 Purchase Date		产品型号 Product Model	
用户名称 User Name			经销商 Distributor		
通讯地址 Mailing Address					
联系人 Contact Person			电话 Phone Number		
电话 Phone Number			传真 Fax		
邮箱 Email			联系人 Contact Person		

打造时尚桌面

DELIVERING DESKTOP FASHION

RoHS

N31051